THIS DRAWING IS UNPUBLISHED.
VERTRAULICHE UNVEROEFFENTLICHTE ZEICHNUNG
© COPYRIGHT 2003 BY TE CONNECTIVITY
ALL RIGHTS RESERVED.
ALLE RECHTE VORBEHALTEN

RELEASED FOR PUBLICATION 08-AUG- 2003
FREI FUER VEROEFFENTLICHUNG

MATED WITH:
PASSEND ZU:

LOC	DIST
A1	–

PROJEKT NR.: EGLPC00054

REVISIONS
AENDERUNGEN

P	LTR	DESCRIPTION BESCHREIBUNG	DATE	DWN	APVD
	A4	DRAWING LOGO CHANGED	04JUN2010	RPT	AW
	B1	NOTE 1 (MATERIAL) REWORKED PER PCN E-11-009702	11MAY2011	ER	BW
	C1	MATERIAL OF INSTANCES -3 AND -4 ARE CHANGED	02NOV2012	KR	T.J
	D1	NEW INSTANCES -5 AND -6 ARE ADDED	26APR2013	KR	TD

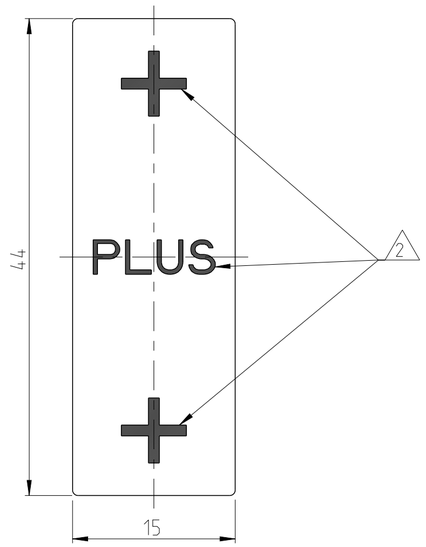

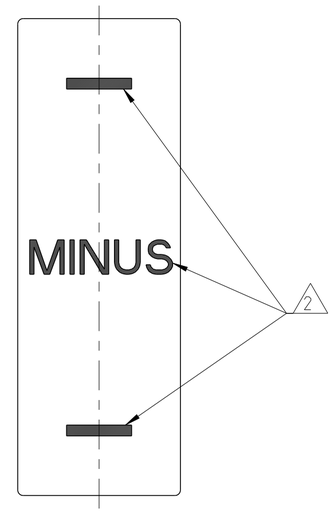

1. MATERIAL: POLYESTER, UL LISTED PER PGDQ2, SUITABLE FOR OUTDOOR USE WHEN AFFIXED TO NYLON OR POLYCARBONATE.
2. CHARACTER COLOUR BLACK
3. LABEL COLOUR WHITE MAT
4. REAR SIDE SELF ADHESIVE
5. PACKAGING SEE TABLE
6. LABEL COLOUR RED
7. LABEL COLOUR BLUE
8. CHARACTER COLOUR WHITE

-1 AND -3 AS SHOWN

SCALE 1:1 / M 1:1

SCALE 1:1 / M 1:1

-2 AND -4 AS SHOWN

5000 LABEL	ON REEL	MINUS	-6
5000 REEL	ON REEL	PLUS	-5
100 LABEL	10 LABEL PER SHEET 10 SHEETS IN A BAG	MINUS	-4
100 LABEL	10 LABEL PER SHEET 10 SHEETS IN A BAG	PLUS	-3
10000 LABEL	ON REEL	MINUS	-2
10000 LABEL	ON REEL	PLUS	-1
QUANTITY	FORM	PRINTING	PART NO.
5 PACKAGING			

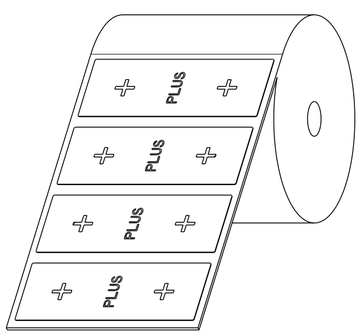

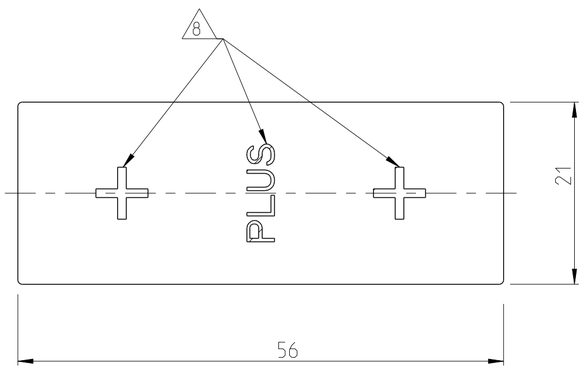

-5 AS SHOWN

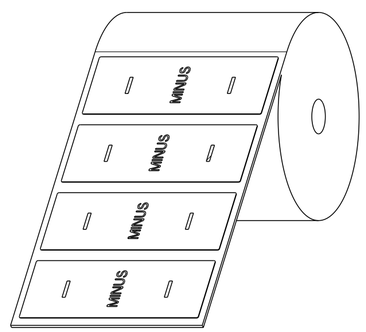

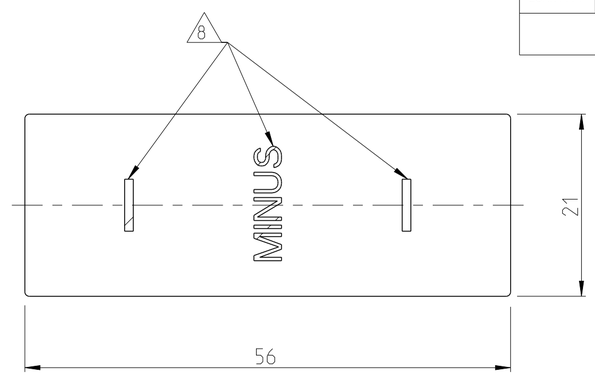

-6 AS SHOWN

THIS DRAWING IS A CONTROLLED DOCUMENT.

DIMENSIONS: MASSEINHEITEN: mm

TOLERANCES UNLESS OTHERWISE SPECIFIED: ALLGEMEINTOLERANZEN
0 PLC ±1
1 PLC ±
2 PLC ±
3 PLC ±
4 PLC ±
ANGLES/WINKEL ±

MATERIAL –

FINISH/OBERFLAECHE/FARBE –

DWN E. WERNER 07-AUG-03
CHK H. SCHERER 07-AUG-03
APVD G. FELDMEIER 07-AUG-03

PRODUCT SPEC PRODUKTSPEZ. –

APPLICATION SPEC VERARBEITUNGSSPEZ. –

WEIGHT GEWICHT –

TE Connectivity

NAME
LABEL
ETIKETT
–

SIZE	CAGE CODE	DRAWING NO ZEICHNUNGS-NR.	RESTRICTED TO NUR FUER
A2	00779	C-1718078	–

Customer Drawing /KUNDENZEICHNUNG

SCALE MASSSTAB 4:5 SHEET BLATT 1 OF VON 1 REV D1

1471-9 (3/11)