THIS COPY IS PROVIDED ON A RESTRICTED BASIS AND IS NOT TO BE USED IN ANY WAY DETRIMENTAL TO THE INTERESTS OF PANDUIT CORP.

PANDUIT P/N	WEIGHT
CMBPR**Y CMBPB**Y	.09 LB/10 PCS (42.5 g/10 PCS)

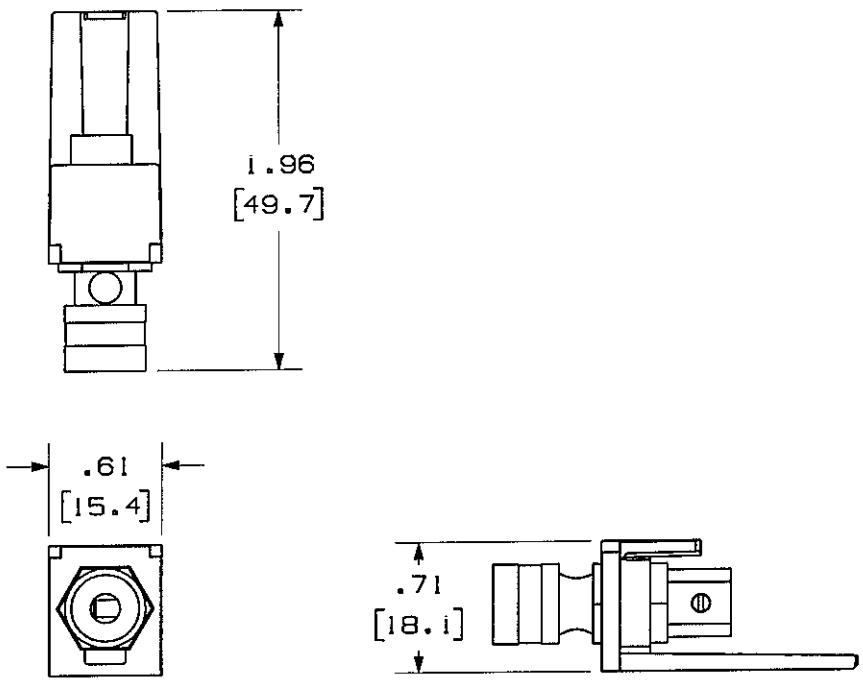

NOTES:
1. SEE CURRENT CATALOG FOR ADDITIONAL PART NUMBER SUFFIXES TO INDICATE COLOR AND OR PACKAGE QUANTITY.
2. SEE CATALOG FOR COMPLETE LIST OF PARTS APPLICABLE FOR USE WITH THIS PART.
3. DIMENSIONS IN PARENTHESES ARE IN METRIC.
4. R AND B IN PART NUMBER REPRESENT THE BAND COLOR ON THE KNURLED TERMINATION NUT.

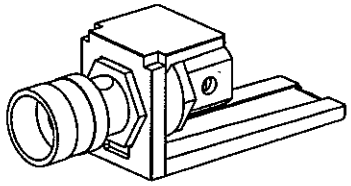

REV	DATE	BY	CHK	DESCRIPTION	ECN - R	CUST	SUP	OTH
R	3-13-06	JsP	MJO	RELEASED TO PRODUCTION	02479-183	MJO	MJO	

NETWORK SYSTEMS
MAY 25 2006
ENGINEERING DEPT

MODEL FILENAME: M01672AA_CMBP_01.PRT
DRAWING FILENAME: M02479GY_DC183_00A.PRT
SIZE: A

MINI-COM 5 WAY BINDING POST MODULE CUSTOMER DRAWING

PANDUIT™ CORP.
TINLEY PARK, ILL 60477

THIRD ANGLE PROJECTION

ALL DIMENSIONS ARE GIVEN IN INCHES, UNLESS OTHERWISE SPECIFIED.
DIMENSIONAL TOLERANCES ARE:
[.X] ± [.XXX] ±.010[.3]
[.XX] ±.03[.8] ANGLES ±

DRAWN BY: JsP
DATE: 3-13-06
CHK'D: MJO

MATERIAL:
MODULE: ABS
CONNECTOR: GOLD PLATED BRASS

I.I. NUMBER: N/A
PRODUCT SPEC: N/A
WORK INSTRUCTION: N/A
SCALE: NONE
PART NO.: CMBPR**Y CMBPB**Y
DRAWING NO.: 02479-183