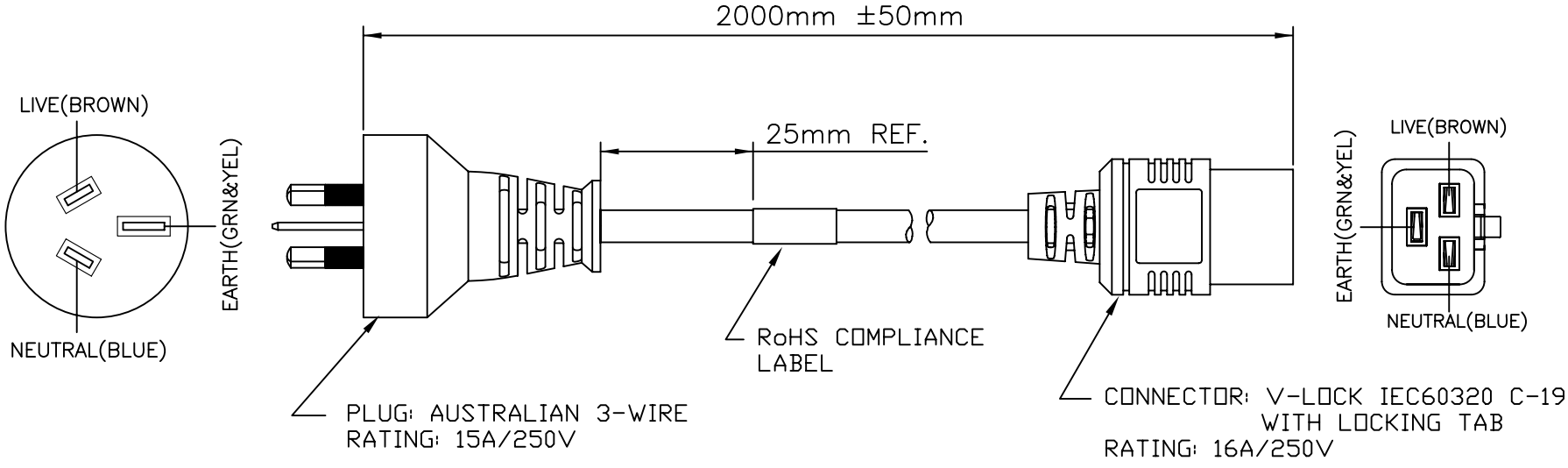

VOLEX RESERVES THE RIGHT TO ALTER NON-CRITICAL DIMENSIONS WITHOUT NOTICE.

NOTES

1) CORDAGE: H05VV-F 3 X 1.5mm, BLACK, LEAD FREE
2) APPROVALS:
3) PACKAGING: 40 PIECES PER CARTON
4) THIS ITEM IS A CORD ONLY. NO C-20 INLET INCLUDED.

PACKAGING: FOLD & TIE

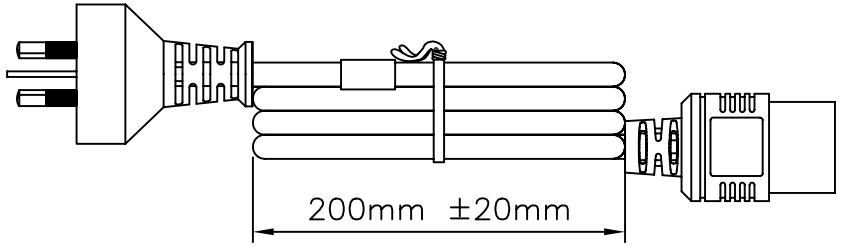

REV	DESCRIPTION	DATE
1	C.U.D - NEW RELEASE	9/5/07

Volex
CUD
FORM IN71-07 REV.A

- ☒ Indianapolis, IN
- ☐ Conover, N.C.
- ☐ Freemont, CA
- ☐ Aguascalientes, MX
- ☐ Tijuana, Mexico
- ☐ Hermosillo, MX
- ☐ Clinton, AR
- ☐ Kanata, Canada

Proprietary Notice:

This document is the property of Volex Incorporated. The information contained herein is not to be disclosed to anyone without the express written consent of Volex Inc.

MATERIAL:
PLUG: PVC-BLACK
CONNECTOR: PVC-BLACK
JACKET: PVC-BLACK

FINISH:
JACKET: SMOOTH

SCALE: NOT TO SCALE
ECO: N/A

TOLERANCE UNLESS OTHERWISE SPECIFIED
.XXX ± .005
.XX ± .02
.X ± .03
FRACT. ± 1/32
ANGULAR ± 1/2°

ITEM DESCRIPTION
CORDSET - AUSTRALIAN V-LOCK
DETACHABLE POWER SUPPLY CORD (2M)

APPROVED	DRAWN BY	DATE:
STC	STC	9/5/07

PART NO.
VL-1436-24-200