19-0439; Rev 1; 3/96

Low-Cost, Low-Voltage, Quad, SPST, CMOS Analog Switches

General Description

The MAX4066/MAX4066A quad, SPST, CMOS analog switches are designed to provide superior performance over the industry-standard devices. These new switches feature guaranteed operation from +2.0V to +16V and are fully specified at 3V, 5V, and 12V. Both parts offer 45Ω on-resistance and 2Ω channel-to-channel matching at 12V, plus 4Ω flatness over the specified signal range.

Each device is controlled by TTL/CMOS input levels and can be used as a bilateral switch or multiplexer/demultiplexer.

Low off leakage current (100pA for the MAX4066A) and low power consumption (0.5µW) make the MAX4066/MAX4066A ideal for battery-operated equipment. These parts are also suitable for low-distortion audio applications. Both devices are available in 14-pin DIP and SO packages, as well as a 16-pin QSOP. ESD protection is greater than 2000V per Method 3015.7.

Applications

Battery-Operated Equipment

Audio and Video Signal Routing

Low-Voltage Data-Acquisition Systems

Sample-and-Hold Circuits

Communication Circuits

Features

- **Pin Compatible with 74HC4066**
- **Guaranteed On-Resistance:**
  170Ω max (3V supply)
  45Ω max (12V supply)
- **Guaranteed Match Between Channels:**
  4Ω max (MAX4066)
  2Ω max (MAX4066A)
- **Guaranteed Low Leakage Currents:**
  1nA at +25°C (MAX4066)
  100pA at +25°C (MAX4066A)
- **Single-Supply Operation from +2.0V to +16V**
- **V+ to GND Signal Handling**
- **TTL/CMOS-Logic Compatible**
- **Low Power Consumption: 0.5µW**
- **Low Crosstalk: -86dB**
- **Low Off Isolation: -58dB**
- **Low Distortion: 0.03%**
- **Wide Bandwidth: > 100MHz**

Ordering Information

PART	TEMP. RANGE	PIN-PACKAGE
MAX4066CPD	0°C to +70°C	14 Plastic DIP
MAX4066CSD	0°C to +70°C	14 Narrow SO
MAX4066CEE	0°C to +70°C	16 QSOP
MAX4066C/D	0°C to +70°C	Dice*

Ordering Information continued at end of data sheet.

** Contact factory for dice specifications.*

Pin Configurations/Truth Table

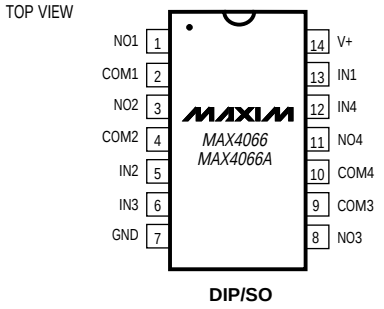

TRUTH TABLE

ON/OFF CONTROL INPUT	STATE OF ANALOG SWITCH
L	OFF
H	ON

N.C. = NO INTERNAL CONNECTION

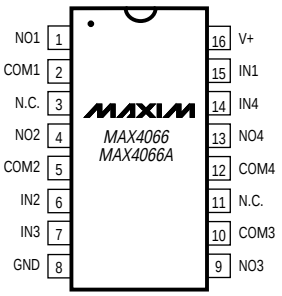

For free samples & the latest literature: http://www.maxim-ic.com, or phone 1-800-998-8800

Low-Cost, Low-Voltage, Quad, SPST, CMOS Analog Switches

ABSOLUTE MAXIMUM RATINGS

(Voltages referenced to GND)

V+ .....-0.3V to +17V
$V_{IN_}$, $V_{COM_}$, V_{NO} (Note 1) .....-0.3V to (V + +0.3V)
Current (any terminal) 30mA
Peak Current (any terminal) 100mA
ESD per Method 3015.7 .....>2000V
Continuous Power Dissipation (T_A = +70°C)
Plastic DIP (derate 10.00mW/°C above +70°C) 800mW
Narrow SO (derate 8.00mW/°C above +70°C) 640mW
QSOP (derate 9.52mW/°C above +70°C).....762mW
CERDIP (derate 9.09mW/°C above +70°C).....727mW
Operating Temperature Ranges
MAX4066C_ _/MAX4066AC_ _ .....0°C to +70°C
MAX4066E_ _/MAX4066AE_ _.....-40°C to +85°C
MAX4066MJD/MAX4066AMJD .....-55°C to +125°C
Storage Temperature Range .....-65°C to +150°C
Lead Temperature (soldering, 10sec) .....+300°C

Note 1: Signals on NO_, COM_, or IN_ exceeding V+ or GND are clamped by internal diodes. Limit forward-diode current to maximum current rating.

Stresses beyond those listed under "Absolute Maximum Ratings" may cause permanent damage to the device. These are stress ratings only, and functional operation of the device at these or any other conditions beyond those indicated in the operational sections of the specifications is not implied. Exposure to absolute maximum rating conditions for extended periods may affect device reliability.

ELECTRICAL CHARACTERISTICS—Single +12V Supply

(V+ = 12V ±10%, GND = 0V, V_{INH} = 4.0V, V_{INL} = 0.8V, T_A = T_{MIN} to T_{MAX}, unless otherwise noted.)

PARAMETER	SYMBOL	CONDITIONS			MIN	TYP (Note 2)	MAX	UNITS
ANALOG SWITCH								
Analog Signal Range	V_{COM}, V_{NO}	(Note 3)			0		V+	V
On-Resistance	R_{ON}	V+ = 12V, I_{COM} = 2mA, V_{NO} = 10V	T_A = +25°C			16	45	Ω
			T_A = T_{MIN} to T_{MAX}	C, E			55	
				M			75	
On-Resistance Match Between Channels (Note 4)	ΔR_{ON}	V+ = 12V, I_{COM} = 2mA, V_{NO} = 10V	T_A = +25°C	MAX4066		0.5	4	Ω
				MAX4066A		0.5	2	
			T_A = T_{MIN} to T_{MAX}				6	
On-Resistance Flatness (Note 5)	$R_{FLAT(ON)}$	V+ = 12V, I_{COM} = 2mA, V_{NO} = 10V, 5V, 1V	T_A = +25°C			2	4	Ω
			T_A = T_{MIN} to T_{MAX}				6	
NO or NC Off Leakage Current (Note 6)	$I_{NO(OFF)}$	V+ = 12V, V_{COM} = 0V, V_{NO} = 10V	T_A = +25°C	MAX4066	-1		1	nA
				MAX4066A	-0.1		0.1	
			T_A = T_{MIN} to T_{MAX}	C, E	-6		6	
				M	-100		100	
COM Off Leakage Current (Note 6)	$I_{COM(OFF)}$	V+ = 12V, V_{COM} = 0V, V_{NO} = 10V	T_A = +25°C	MAX4066	-1		1	nA
				MAX4066A	-0.1		0.1	
			T_A = T_{MIN} to T_{MAX}	C, E	-6		6	
				M	-100		100	
COM On Leakage Current (Note 6)	$I_{COM(ON)}$	V+ = 12V, V_{COM} = 10V, V_{NO} = 10V	T_A = +25°C	MAX4066	-2		2	nA
				MAX4066A	-0.2		0.2	
			T_A = T_{MIN} to T_{MAX}	C, E	-12		12	
				M	-200		200	

ELECTRICAL CHARACTERISTICS—Single +12V Supply (continued)

(V+ = 12V ±10%, GND = 0V, V_{INH} = 4.0V, V_{INL} = 0.8V, T_A = T_{MIN} to T_{MAX}, unless otherwise noted.)

PARAMETER	SYMBOL	CONDITIONS		MIN	TYP (Note 2)	MAX	UNITS
LOGIC INPUT							
Input Current with Input Voltage High	I_{INH}	IN = 5.0V, all others = 0.8V		-0.5	0.005	0.5	µA
Input Current with Input Voltage Low	I_{INL}	IN = 0.8V, all others = 5.0V		-0.5	0.005	0.5	µA
DYNAMIC							
Turn-On Time	t_{ON}	V_{COM} = 10V, Figure 2	T_A = +25°C		25	100	ns
			T_A = T_{MIN} to T_{MAX}			150	
Turn-Off Time	t_{OFF}	V_{COM} = 10V, Figure 2	T_A = +25°C		15	75	ns
			T_A = T_{MIN} to T_{MAX}			100	
On-Channel Bandwidth	BW	Signal = 0dbm, Figure 4, 50Ω in and out	T_A = +25°C		100		MHz
Charge Injection (Note 3)	V_{CTE}	C_L = 1.0nF, V_{GEN} = 0V, R_{GEN} = 0Ω, Figure 3	T_A = +25°C		1	10	pC
Off Isolation (Note 7)	V_{ISO}	R_L = 50Ω, C_L = 5pF, f = 1MHz, Figure 4	T_A = +25°C		-58		dB
Crosstalk (Note 8)	V_{CT}	R_L = 50Ω, C_L = 5pF, f = 1MHz, Figure 5	T_A = +25°C		-86		dB
NO Capacitance	$C_{(OFF)}$	f = 1MHz, Figure 6	T_A = +25°C		9		pF
COM Off Capacitance	$C_{COM(OFF)}$	f = 1MHz, Figure 6	T_A = +25°C		9		pF
COM On Capacitance	$C_{COM(ON)}$	f = 1MHz, Figure 6	T_A = +25°C		22		pF
SUPPLY							
Power-Supply Range							V
Supply Current	I+	V_{IN} = 0V or V+, all channels on or off	T_A = T_{MIN} to T_{MAX}	-1	0.001	1	µA
Total Harmonic Distortion	THD		T_A = T_{MIN} to T_{MAX}		0.03		%

Low-Cost, Low-Voltage, Quad, SPST, CMOS Analog Switches

ELECTRICAL CHARACTERISTICS—Single +5V Supply

(V+ = 5V ±10%, V- = 0V ±10%, GND = 0V, V_{INH} = 2.4V, V_{INL} = 0.8V, T_A = T_{MIN} to T_{MAX}, unless otherwise noted.)

PARAMETER	SYMBOL	CONDITIONS			MIN	TYP (Note 2)	MAX	UNITS
ANALOG SWITCH								
Analog Signal Range	V_{COM}, V_{NO}	(Note 3)			0		V+	V
On-Resistance	R_{ON}	V+ = 4.5V, I_{COM} = -1.0mA, V_{NO} = 3.5V	T_A = +25°C			45	75	Ω
			T_A = T_{MIN} to T_{MAX}	C, E		52	100	
				M			125	
On-Resistance Match Between Channels (Note 4)	ΔR_{ON}	V+ = 5V, I_{COM} = -1.0mA, V_{NO} = 3V	T_A = +25°C			0.3	4	Ω
			T_A = T_{MIN} to T_{MAX}				12	
On-Resistance Flatness (Notes 3, 5)	$R_{FLAT(ON)}$	V+ = 5V, I_{COM} = -1.0mA, V_{NO} = 1V, 3V	T_A = +25°C			4	6	Ω
			T_A = T_{MIN} to T_{MAX}				8	
NO Off Leakage Current (Note 6)	$I_{NO(OFF)}$	V+ = 5.5V, V_{COM} = 0V, V_{NO} = 4.5V	T_A = +25°C	MAX4066	-1		1	nA
				MAX4066A	-0.1		0.1	
			T_A = T_{MIN} to T_{MAX}	C, E	-6		6	
				M	-100		100	
COM Off Leakage Current (Note 6)	$I_{COM(OFF)}$	V+ = 5.5V, V_{COM} = 0V, V_{NO} = 4.5V	T_A = +25°C	MAX4066	-1		1	nA
				MAX4066A	-0.1		0.1	
			T_A = T_{MIN} to T_{MAX}	C, E	-6		6	
				M	-100		100	
COM On Leakage Current (Note 6)	$I_{COM(ON)}$	V+ = 5.5V, V_{COM} = 5V, V_{NO} = 4.5V	T_A = +25°C	MAX4066	-2		2	nA
				MAX4066A	-0.2		0.2	
			T_A = T_{MIN} to T_{MAX}	C, E	-12		12	
				M	-200		200	
DYNAMIC								
Turn-On Time	t_{ON}	V_{NO} = 3V	T_A = +25°C			43	125	ns
			T_A = T_{MIN} to T_{MAX}				175	
Turn-Off Time	t_{OFF}	V_{NO} = 3V	T_A = +25°C			18	75	ns
			T_A = T_{MIN} to T_{MAX}				125	
On-Channel Bandwidth	BW	Signal = 0dBm, 50Ω in and out, Figure 4				100		MHz
Charge Injection (Note 3)	Q	V_{GEN} = 0V, R_{GEN} = 0V, C_L = 1.0nF, Figure 3	T_A = +25°C			2	10	pC
SUPPLY								
Positive Supply Current	I+	V+ = 5.5V, V_{IN} = 0V or V+, all channels on or off			-1		1	µA

ELECTRICAL CHARACTERISTICS—Single +3V Supply

(V+ = 2.7V to 3.3V ±10%, GND = 0V, V_{INH} = 2.4V, V_{INL} = 0.8V, T_A = T_{MIN} to T_{MAX}, unless otherwise noted.)

PARAMETER	SYMBOL	CONDITIONS		MIN	TYP (Note 2)	MAX	UNITS
ANALOG SWITCH							
Analog Signal Range	V_{COM}, V_{NO}	(Note 3)		0		V+	V
Channel On-Resistance	R_{ON}	V+ = 3V, I_{COM} = -1.0mA, V_{NO} = 1.5V	T_A = +25°C			170	Ω
			T_A = T_{MIN} to T_{MAX}			225	
DYNAMIC							
Turn-On Time (Note 3)	t_{ON}	V+ = 3V, V_{NO} or V_{NC} = 1.5V	T_A = +25°C		80	185	ns
			T_A = T_{MIN} to T_{MAX}			230	
Turn-Off Time (Note 3)	t_{OFF}	V+ = 3V, V_{NO} or V_{NC} = 1.5V	T_A = +25°C		28	150	ns
			T_A = T_{MIN} to T_{MAX}			200	
Charge Injection (Note 3)	Q	C_L = 1.0nF, V_{GEN} = 0V, R_{GEN} = 0V	T_A = +25°C		2	10	pC
SUPPLY							
Positive Supply Current	I+	V+ = 3.6V, V_{IN} = 0V or V+, all channels on or off		-1	0.001	1	µA

Note 2: The algebraic convention, where the most negative value is a minimum and the most positive value a maximum, is used in this data sheet.
Note 3: Guaranteed by design.
Note 4: ΔR_{ON} = R_{ON} (max) - R_{ON} (min).
Note 5: Flatness is defined as the difference between the maximum and minimum value of on-resistance as measured over the specified analog signal range.
Note 6: Leakage parameters are 100% tested at maximum-rated hot temperature and guaranteed by correlation at +25°C.
Note 7: Off Isolation = $20\log_{10}$ (V_{COM} / V_{NO}), V_{COM} = output, V_{NO} = input to off switch.
Note 8: Between any two switches.

Low-Cost, Low-Voltage, Quad, SPST, CMOS Analog Switches

Typical Operating Characteristics

(T_A = +25°C, unless otherwise noted.)

ON-RESISTANCE vs. V_{COM}

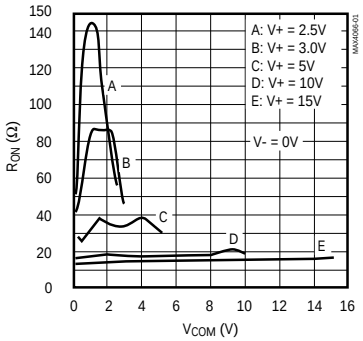

ON-RESISTANCE vs. V_{COM} AND TEMPERATURE

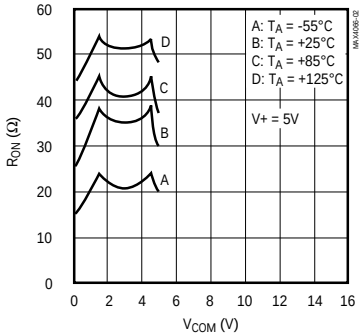

OFF LEAKAGE CURRENT vs. TEMPERATURE

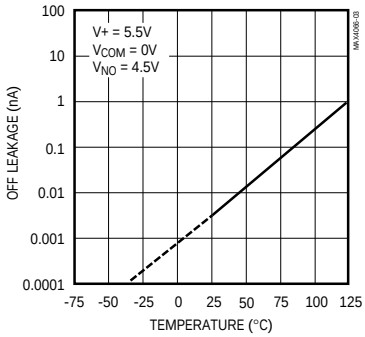

ON LEAKAGE CURRENT vs. TEMPERATURE

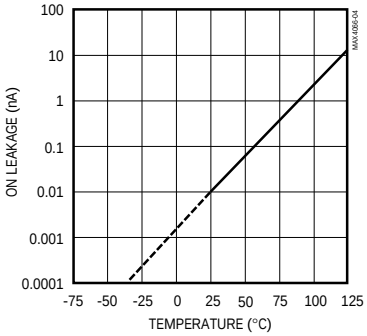

CHARGE INJECTION vs. V_{COM}

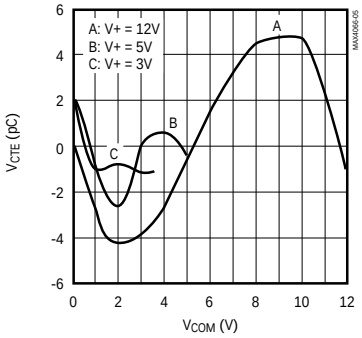

SUPPLY CURRENT vs. TEMPERATURE

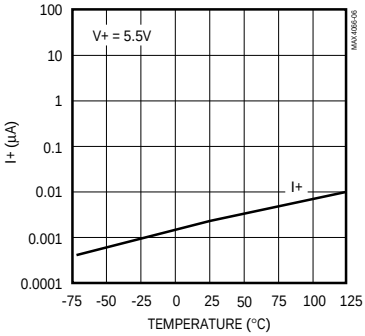

FREQUENCY RESPONSE

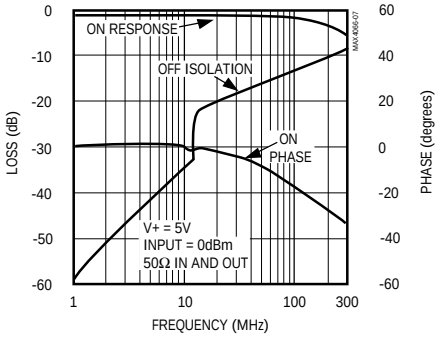

TOTAL HARMONIC DISTORTION vs. FREQUENCY

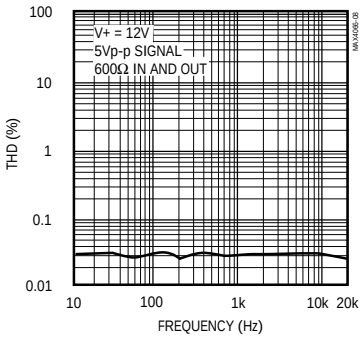

Pin Description

PIN		NAME	FUNCTION
DIP/SO	QSOP		
1, 3, 8, 11	1, 4, 9, 13	NO1–NO4	Analog Switch Normally Open Terminal (bidirectional)
2, 4, 9, 10	2, 5, 10, 12	COM1–COM4	Analog Switch Common Terminal (bidirectional)
—	3, 11	N.C.	Not internally connected
13, 5, 6, 12	15, 6, 7, 14	IN1–IN4	Logic Control Inputs
7	8	GND	Ground
14	16	V+	Positive Supply Voltage

Applications Information

Overvoltage Protection

Proper power-supply sequencing is recommended for all CMOS devices. Do not exceed the absolute maximum ratings, because stresses beyond the listed ratings may cause permanent damage to the devices. Always sequence V+ on first, followed by the logic inputs. If power-supply sequencing is not possible, add two small signal diodes in series with supply pins for overvoltage protection (Figure 1). Adding diodes reduces the analog signal range to 1V below V+ and 1V above GND, but low switch resistance and low leakage characteristics are unaffected. Device operation is unchanged, and the difference between V+ and GND should not exceed 17V.

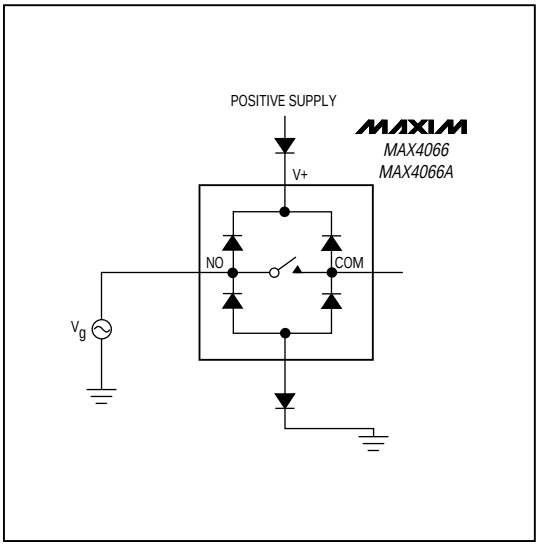

Figure 1. Overvoltage Protection Using Two External Blocking Diodes

Low-Cost, Low-Voltage, Quad, SPST, CMOS Analog Switches

Test Circuits/Timing Diagrams

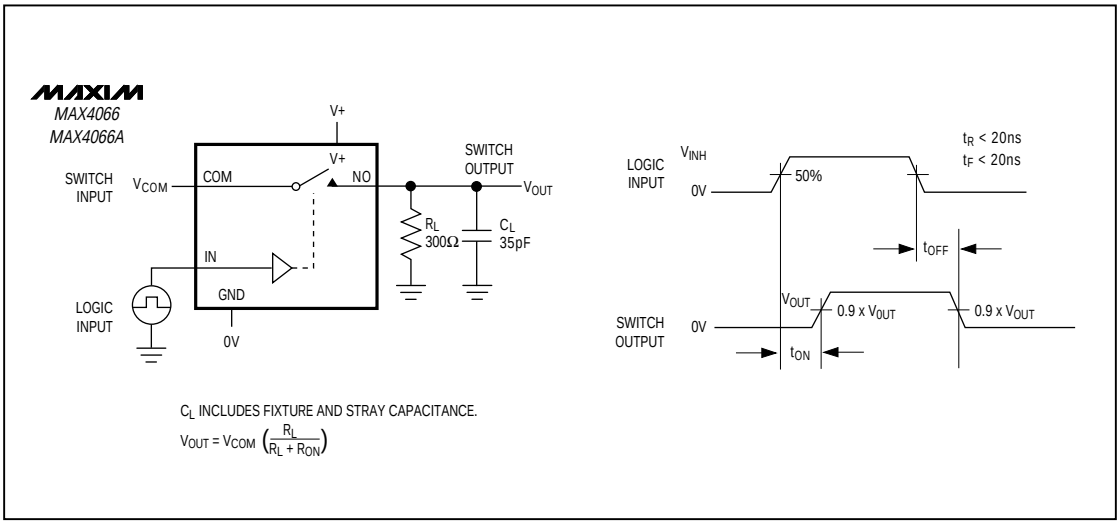

Figure 2. Switching Time

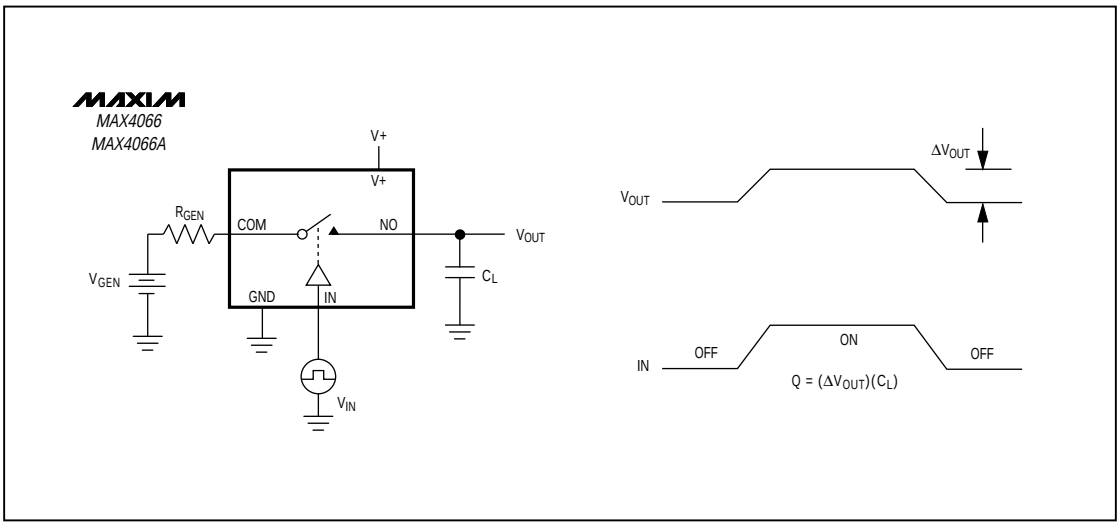

Figure 3. Charge Injection

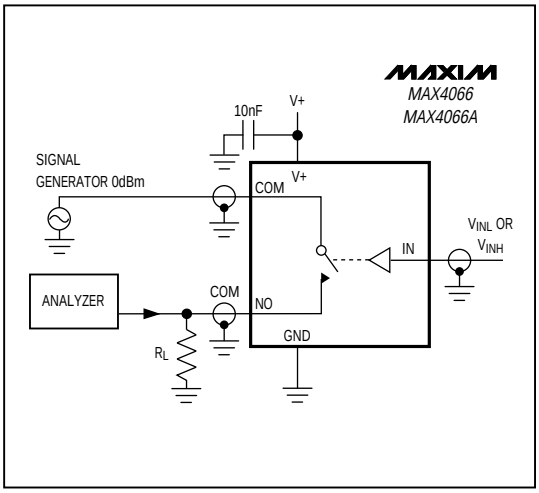

Figure 4. Off Isolation/On-Channel Bandwidth

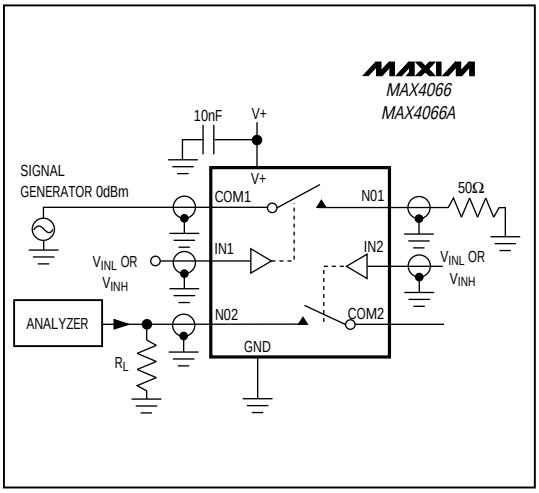

Figure 5. Crosstalk

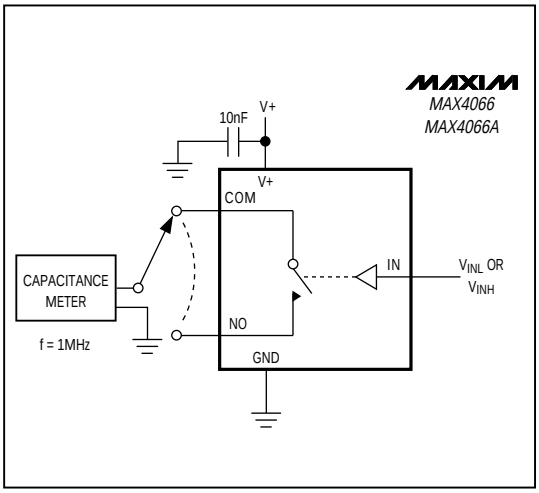

Figure 6. Channel Off/On Capacitance

Low-Cost, Low-Voltage, Quad, SPST, CMOS Analog Switches

_Ordering Information (continued)

PART	TEMP. RANGE	PIN-PACKAGE
MAX4066EPD	-40°C to +85°C	14 Plastic DIP
MAX4066ESD	-40°C to +85°C	14 Narrow SO
MAX4066MJD	-55°C to +125°C	14 CERDIP**
MAX4066ACPD	0°C to +70°C	14 Plastic DIP
MAX4066ACSD	0°C to +70°C	14 Narrow SO
MAX4066ACEE	0°C to +70°C	16 QSOP
MAX4066AC/D	0°C to +70°C	Dice*
MAX4066AEPD	-40°C to +85°C	14 Plastic DIP
MAX4066AESD	-40°C to +85°C	14 Narrow SO
MAX4066AEEE	-40°C to +85°C	16 QSOP
MAX4066AMJD	-55°C to +125°C	14 CERDIP**

** Contact factory for dice specifications.*
*** Contact factory for availability.*

Chip Topography

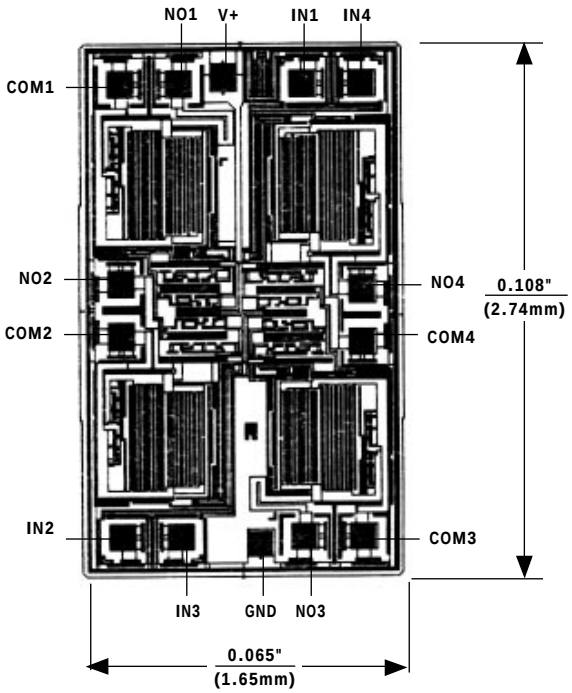

TRANSISTOR COUNT: 69
SUBSTRATE CONNECTED TO V+

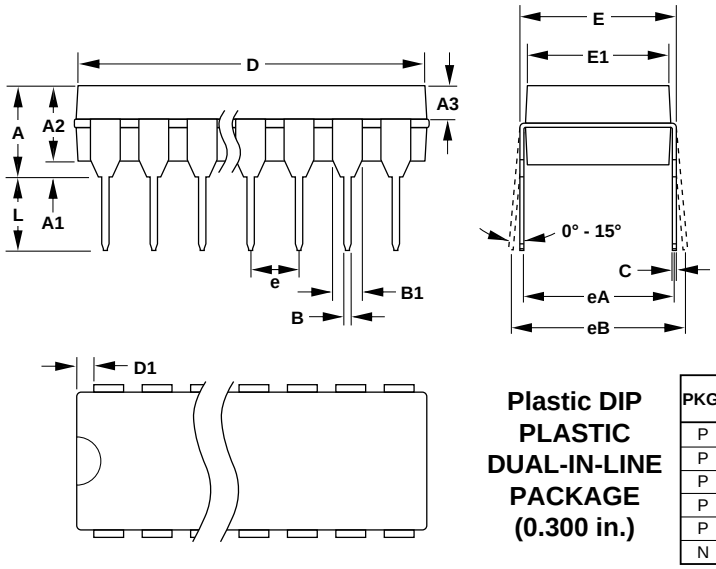

DIM	INCHES		MILLIMETERS	
	MIN	MAX	MIN	MAX
A	–	0.200	–	5.08
A1	0.015	–	0.38	–
A2	0.125	0.175	3.18	4.45
A3	0.055	0.080	1.40	2.03
B	0.016	0.022	0.41	0.56
B1	0.045	0.065	1.14	1.65
C	0.008	0.012	0.20	0.30
D1	0.005	0.080	0.13	2.03
E	0.300	0.325	7.62	8.26
E1	0.240	0.310	6.10	7.87
e	0.100	–	2.54	–
eA	0.300	–	7.62	–
eB	–	0.400	–	10.16
L	0.115	0.150	2.92	3.81

Plastic DIP PLASTIC DUAL-IN-LINE PACKAGE (0.300 in.)

PKG.	DIM	PINS	INCHES		MILLIMETERS	
			MIN	MAX	MIN	MAX
P	D	8	0.348	0.390	8.84	9.91
P	D	14	0.735	0.765	18.67	19.43
P	D	16	0.745	0.765	18.92	19.43
P	D	18	0.885	0.915	22.48	23.24
P	D	20	1.015	1.045	25.78	26.54
N	D	24	1.14	1.265	28.96	32.13

21-0043A

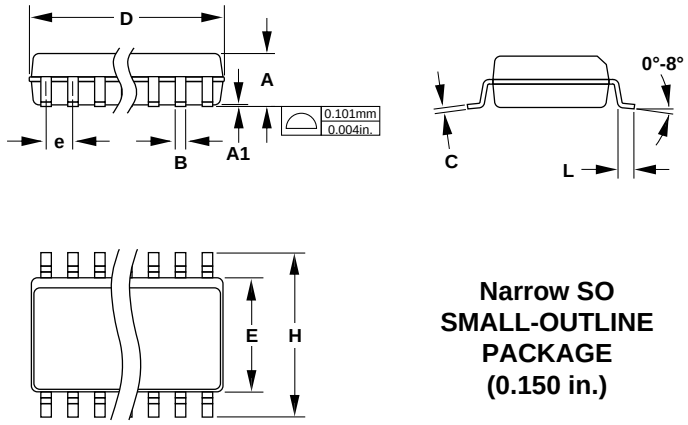

DIM	INCHES		MILLIMETERS	
	MIN	MAX	MIN	MAX
A	0.053	0.069	1.35	1.75
A1	0.004	0.010	0.10	0.25
B	0.014	0.019	0.35	0.49
C	0.007	0.010	0.19	0.25
E	0.150	0.157	3.80	4.00
e	0.050		1.27	
H	0.228	0.244	5.80	6.20
L	0.016	0.050	0.40	1.27

Narrow SO SMALL-OUTLINE PACKAGE (0.150 in.)

DIM	PINS	INCHES		MILLIMETERS	
		MIN	MAX	MIN	MAX
D	8	0.189	0.197	4.80	5.00
D	14	0.337	0.344	8.55	8.75
D	16	0.386	0.394	9.80	10.00

21-0041A

Low-Cost, Low-Voltage, Quad, SPST, CMOS Analog Switches

Package Information (continued)

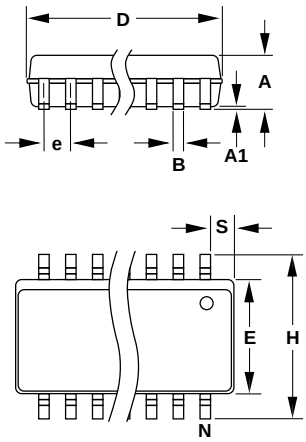

DIM	INCHES		MILLIMETERS	
	MIN	MAX	MIN	MAX
A	0.061	0.068	1.55	1.73
A1	0.004	0.0098	0.127	0.25
A2	0.055	0.061	1.40	1.55
B	0.008	0.012	0.20	0.31
C	0.0075	0.0098	0.19	0.25
D	SEE VARIATIONS			
E	0.150	0.157	3.81	3.99
e	0.25 BSC		0.635 BSC	
H	0.230	0.244	5.84	6.20
h	0.010	0.016	0.25	0.41
L	0.016	0.035	0.41	0.89
N	SEE VARIATIONS			
S	SEE VARIATIONS			
α	0°	8°	0°	8°

DIM	PINS	INCHES		MILLIMETERS	
		MIN	MAX	MIN	MAX
D	16	0.189	0.196	4.80	4.98
S	16	0.0020	0.0070	0.05	0.18
D	20	0.337	0.344	8.56	8.74
S	20	0.0500	0.0550	1.27	1.40
D	24	0.337	0.344	8.56	8.74
S	24	0.0250	0.0300	0.64	0.76
D	28	0.386	0.393	9.80	9.98
S	28	0.0250	0.0300	0.64	0.76

21-0055A

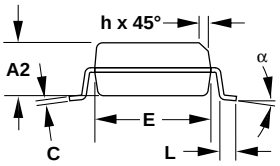

QSOP QUARTER SMALL-OUTLINE PACKAGE

Maxim cannot assume responsibility for use of any circuitry other than circuitry entirely embodied in a Maxim product. No circuit patent licenses are implied. Maxim reserves the right to change the circuitry and specifications without notice at any time.

© 1996 Maxim Integrated Products Printed USA MAXIM is a registered trademark of Maxim Integrated Products.