THIS DRAWING IS UNPUBLISHED. RELEASED FOR PUBLICATION 2011
© COPYRIGHT 2011 - ALL RIGHTS RESERVED.

LOC	DIST
|	-

REVISIONS

P	LTR	DESCRIPTION	DATE	DWN	APVD
	4	REVISED	02MAY2013	KR	JC
	5	UPDATED	22JUL2013	MZ	JC
	A	PARTS RELEASED FOR PRODUCTION	13NOV2013	MZ	JC
	B	ECR-15-011011	27JUL2015	RS	PO

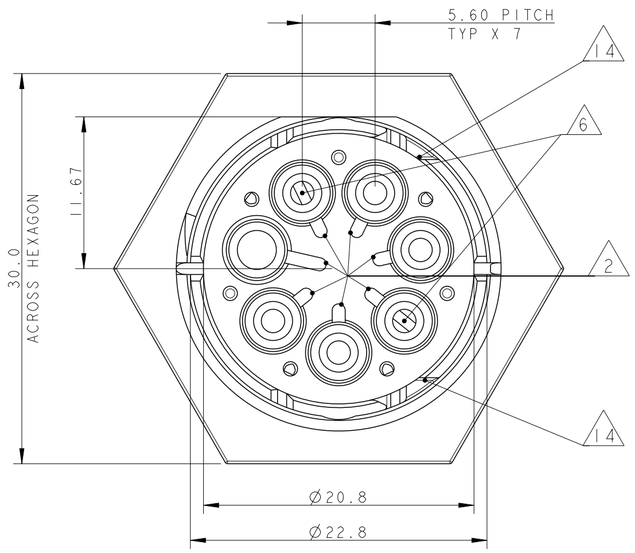

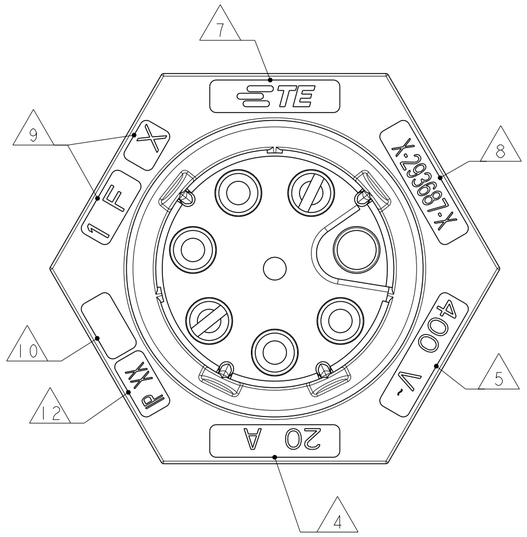

NOTES:

1. MATERIAL: PA GF (NATURAL AND BLACK COLOUR)
2. ALL POLARIZATION KEYS SHOWN FOR REF ONLY
3. WAYS I.D.
4. CURRENT RATING
5. VOLTAGE RATING
6. RIB CLOSING CAVITIES BY CHANGE OVER
7. TE LOGO
8. TE PART NUMBER
9. DATA CODE AND CAVITY I.D.
10. AREA FOR AGENCIES APPROVAL LOGO

11) SEE C-DRAWING 293682 (LOCKING CAP) TO GET IP 40

12. IP CODE
13. POLARISATION KEY "TYPE D" SUITABLE FOR DALI APPLICATION
14. SLOTS TO ALLOW DELATCHING TOOL OPERATION.
FOR DELATCHING TOOL AND OPERATION REFER TO APPLICATION SPECIFICATION

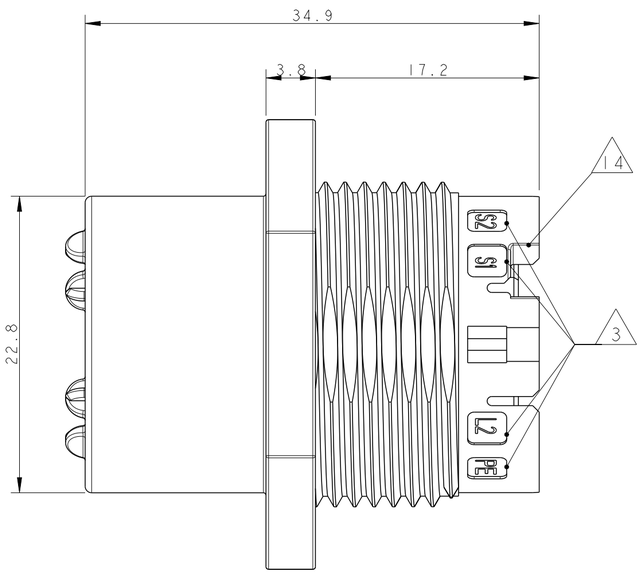

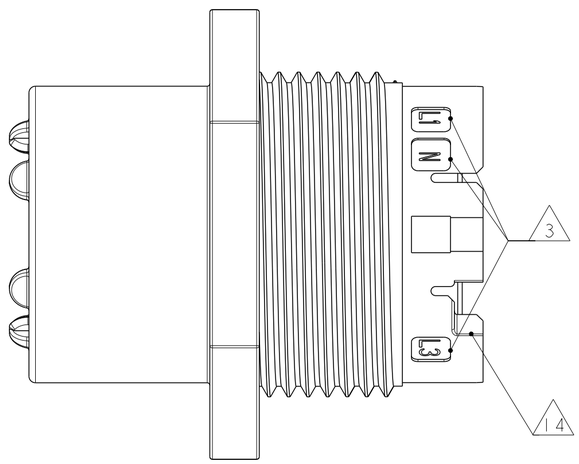

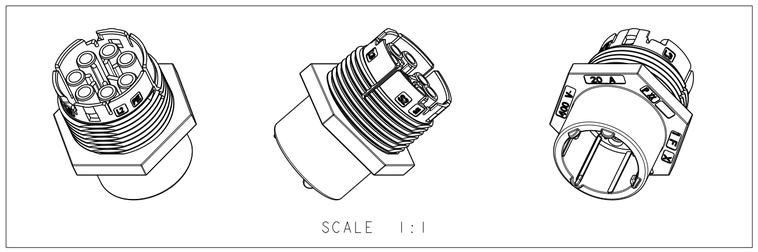

THIS DRAWING IS A CONTROLLED DOCUMENT.		DWN M. ZUCCA 01APR2011	TE Connectivity
DIMENSIONS: mm	TOLERANCES UNLESS OTHERWISE SPECIFIED:	CHK M. ZUCCA 01APR2011	NAME SOCKET HOUSING PANEL MOUNT NECTOR* M-LINE 5 POLES UNSEALED VERSION
	0 PLC ±-	APVD G. TURCO 01APR2011	
	1 PLC ±0.3	PRODUCT SPEC -	
	2 PLC ±0.20		
	3 PLC ±-	APPLICATION SPEC -	SIZE A2 / CAGE CODE 00779 / DRAWING NO C-293687 / RESTRICTED TO -
	4 PLC ±-		
	ANGLES ±3°		
MATERIAL -	FINISH -	WEIGHT -	
		Customer Drawing	SCALE 3:1 / SHEET 1 OF 3 / REV B

1471-9 (3/11)

THIS DRAWING IS UNPUBLISHED. RELEASED FOR PUBLICATION 2011
© COPYRIGHT 2011 - ALL RIGHTS RESERVED.

LOC	DIST
1	-

REVISIONS

P	LTR	DESCRIPTION	DATE	DWN	APVD
	-	SEE SHEET 1	-	-	-

POLARIZATION TYPES

POLARIZATION TYPE "A"

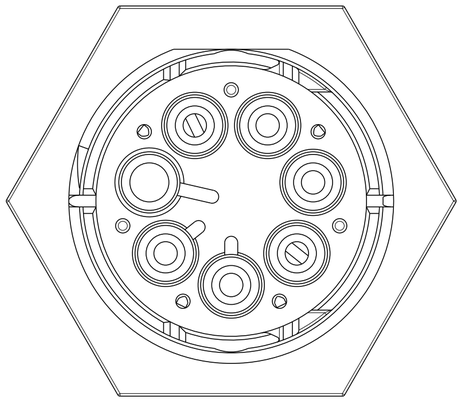

PNs 0-293673-1 AND 1-293673-1

POLARIZATION TYPE "B"

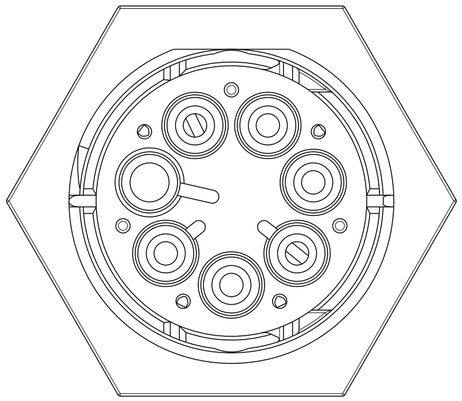

PNs 0-293673-2 AND 1-293673-2

POLARIZATION TYPE "C"

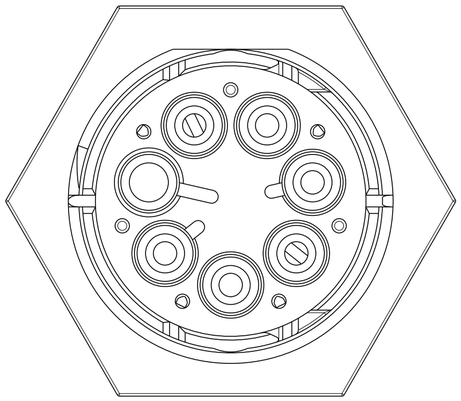

PNs 0-293673-3 AND 1-293673-3

POLARIZATION TYPE "D"

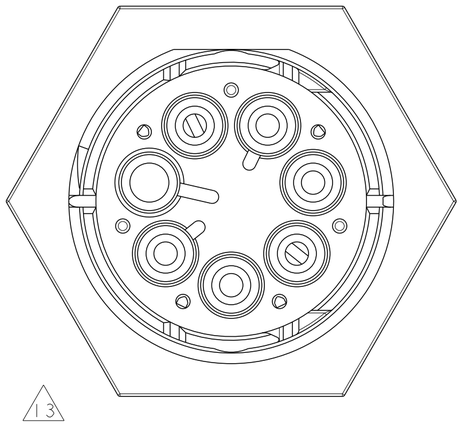

PNs 0-293673-4 AND 1-293673-4

POLARIZATION TYPE "E"

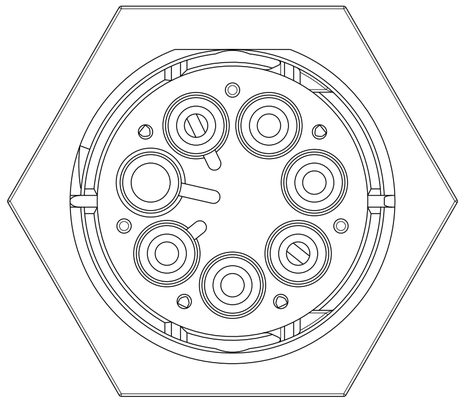

PNs 0-293673-5 AND 1-293673-5

TABLE 1

NOTE	POL. KEYING	COLOUR	DESCRIPTION	REV.	P/N
1	E	BLACK	SOCKET HSG 5 POLES PANEL MOUNT NECTOR* M-LINE	A	1-293687-5
1 13	D	BLACK	SOCKET HSG 5 POLES PANEL MOUNT NECTOR* M-LINE	A	1-293687-4
1	C	BLACK	SOCKET HSG 5 POLES PANEL MOUNT NECTOR* M-LINE	A	1-293687-3
1	B	BLACK	SOCKET HSG 5 POLES PANEL MOUNT NECTOR* M-LINE	A	1-293687-2
1	A	BLACK	SOCKET HSG 5 POLES PANEL MOUNT NECTOR* M-LINE	A	1-293687-1
1	E	NATURAL	SOCKET HSG 5 POLES PANEL MOUNT NECTOR* M-LINE	A	0-293687-5
1 13	D	NATURAL	SOCKET HSG 5 POLES PANEL MOUNT NECTOR* M-LINE	A	0-293687-4
1	C	NATURAL	SOCKET HSG 5 POLES PANEL MOUNT NECTOR* M-LINE	A	0-293687-3
1	B	NATURAL	SOCKET HSG 5 POLES PANEL MOUNT NECTOR* M-LINE	A	0-293687-2
1	A	NATURAL	SOCKET HSG 5 POLES PANEL MOUNT NECTOR* M-LINE	A	0-293687-1

THIS DRAWING IS A CONTROLLED DOCUMENT.

DIMENSIONS: mm

TOLERANCES UNLESS OTHERWISE SPECIFIED:
0 PLC ±-
1 PLC ±0.3
2 PLC ±0.20
3 PLC ±-
4 PLC ±-
ANGLES ±3°

MATERIAL -

FINISH -

DWN M. ZUCCA 01APR2011
CHK M. ZUCCA 01APR2011
APVD G. TURCO 01APR2011

PRODUCT SPEC -

APPLICATION SPEC -

WEIGHT -

TE Connectivity

NAME SOCKET HOUSING PANEL MOUNT NECTOR* M-LINE 5 POLES UNSEALED VERSION

SIZE	CAGE CODE	DRAWING NO	RESTRICTED TO
A2	00779	C-293687	-

Customer Drawing | SCALE 3:1 | SHEET 2 OF 3 | REV B

1471-9 (3/11)

THIS DRAWING IS UNPUBLISHED. RELEASED FOR PUBLICATION 2011
© COPYRIGHT 2011 - ALL RIGHTS RESERVED.

LOC	DIST
1	-

REVISIONS

P	LTR	DESCRIPTION	DATE	DWN	APVD
	-	SEE SHEET 1	-	-	-

PN 293687-3 AS SHOWN

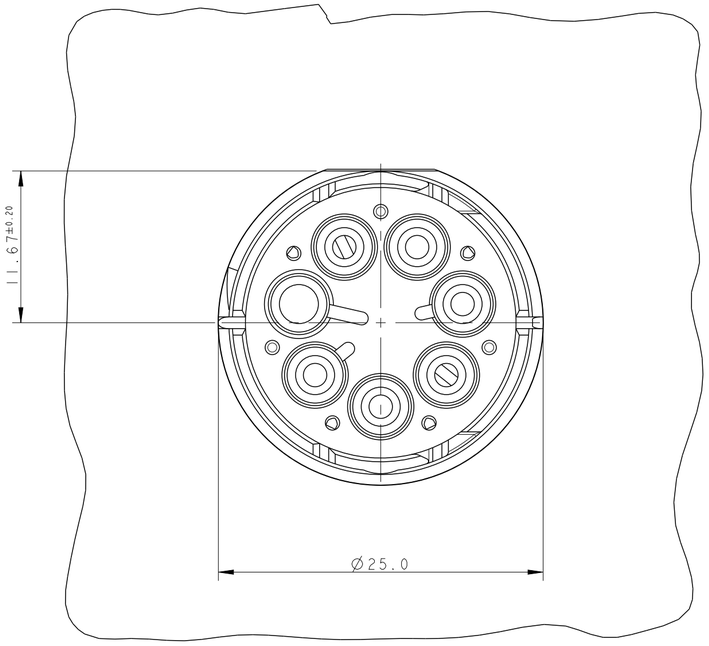

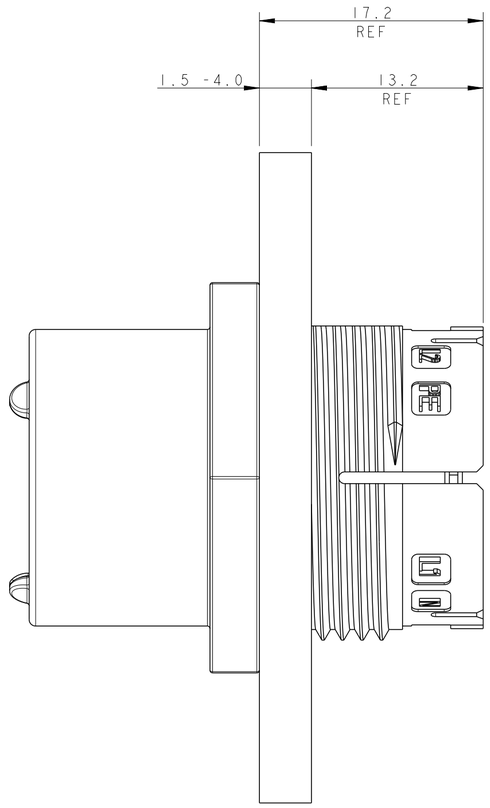

PANEL/WALL SUGGESTED LAYOUT

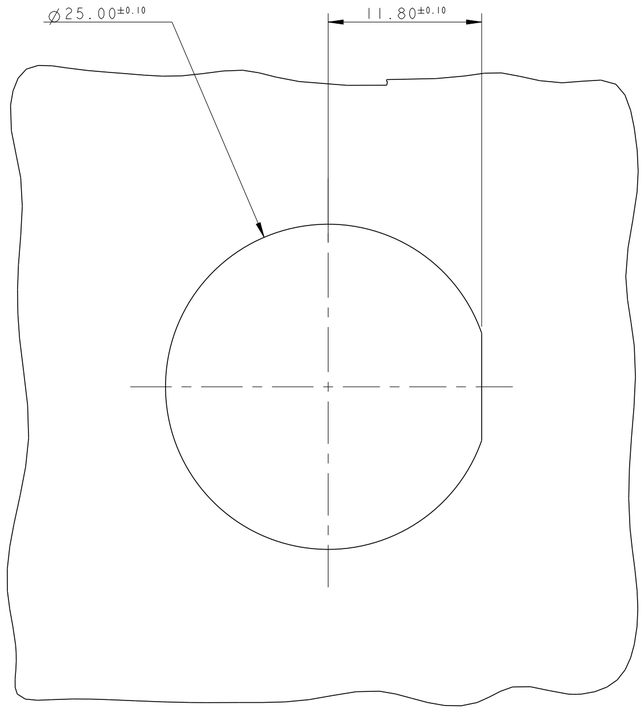

3D VIEWS,
FOR REFERENCE ONLY
PN 293687-3 AS SHOWN

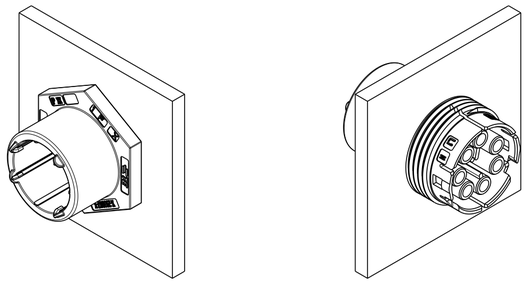

SCALE 1:1

THIS DRAWING IS A CONTROLLED DOCUMENT.

DIMENSIONS: mm

TOLERANCES UNLESS OTHERWISE SPECIFIED:

0 PLC	±-
1 PLC	±0.3
2 PLC	±0.20
3 PLC	±-
4 PLC	±-
ANGLES	±3°

MATERIAL -

FINISH -

DWN	M. ZUCCA	01APR2011
CHK	M. ZUCCA	01APR2011
APVD	G. TURCO	01APR2011

PRODUCT SPEC -

APPLICATION SPEC -

WEIGHT -

TE Connectivity

NAME SOCKET HOUSING PANEL MOUNT NECTOR® M-LINE 5 POLES UNSEALED VERSION

SIZE	CAGE CODE	DRAWING NO	RESTRICTED TO
A2	00779	C-293687	-

Customer Drawing | SCALE 3:1 | SHEET 3 OF 3 | REV B