Customer Information Sheet

DRAWING No.: M20-610XX45	SHEET 2 OF 2	IF IN DOUBT - ASK	©	NOT TO SCALE	THIRD ANGLE PROJECTION	ALL DIMENSIONS IN mm

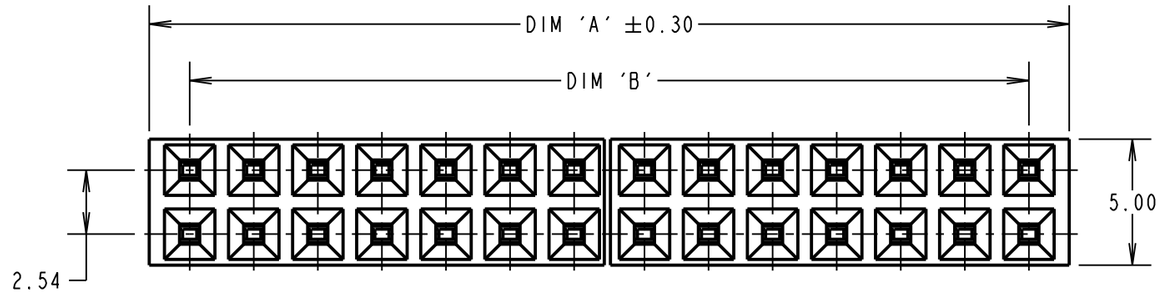

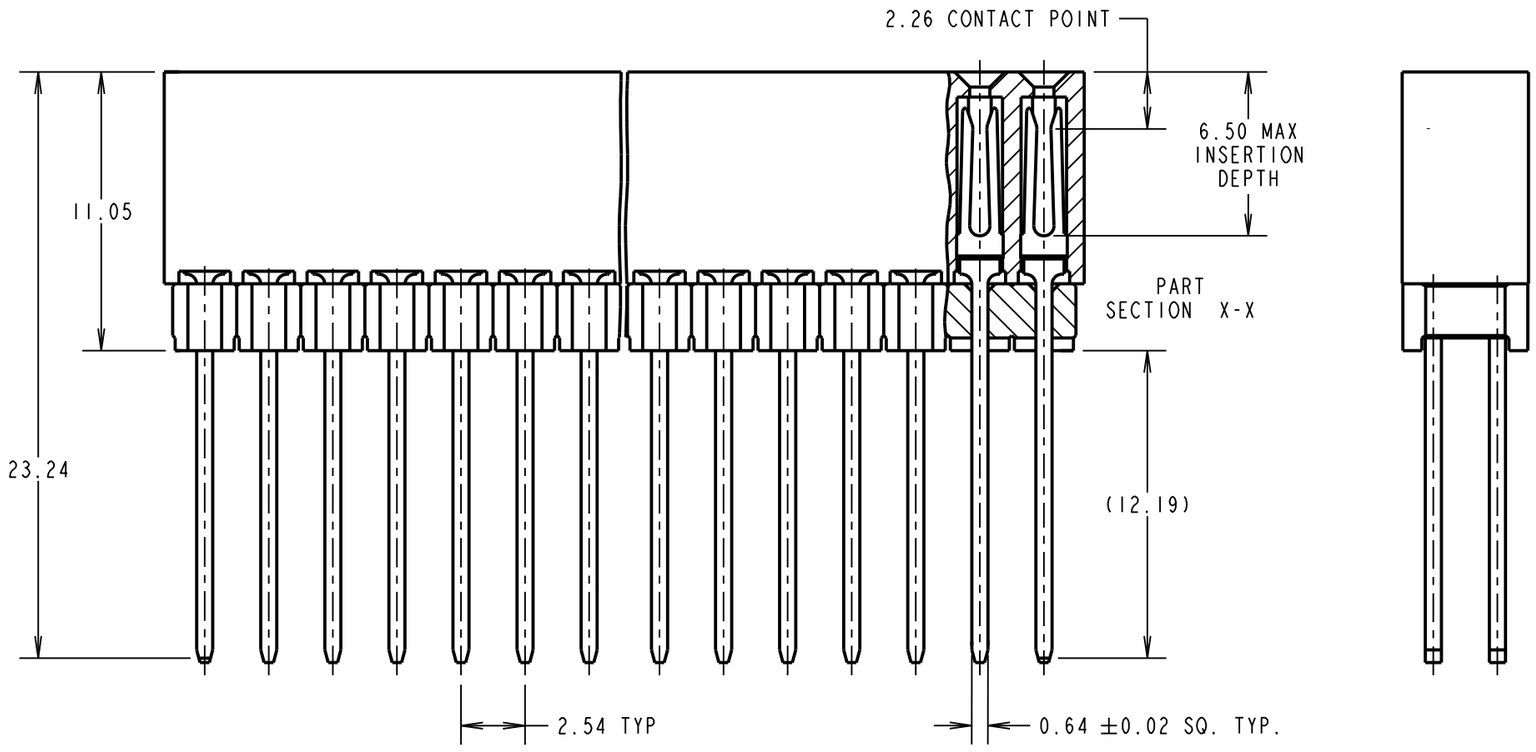

NOTES:
1. ALL TOLERANCES ARE ±0.20 UNLESS OTHERWISE STATED.

SPECIFICATION:
MATERIAL:
MOULDING = HIGH TEMP NYLON 6T UL94V-0, BLACK
CONTACTS = PHOSPHOR BRONZE
FINISH:
CONTACTS = 0.08µm GOLD OVER NICKEL
ELECTRICAL:
CURRENT RATING = 3A MAX
CONTACT RESISTANCE = 30mΩ MAX
INSULATION RESISTANCE = 5,000MΩ MIN
VOLTAGE PROOF = 1,000V AC FOR ONE MINUTE
MECHANICAL:
INSERTION FORCE (PER CONTACT) = 2.0N/MAX
WITHDRAWAL FORCE (PER CONTACT) = 0.3N MIN
ENVIRONMENTAL:
TEMPERATURE RANGE = -55°C TO +105°C
PACKING:
TUBE
FOR COMPLETE SPECIFICATIONS, SEE COMPONENT SPECIFICATION C039XX (LATEST ISSUE)

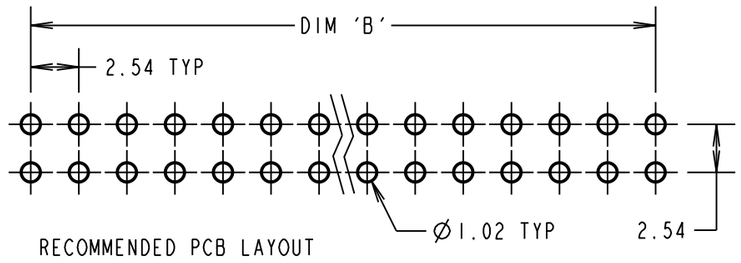

RECOMMENDED PCB LAYOUT

ORDER CODE:
M20-610XX45
No. OF CONTACTS PER ROW: 20, 32
FINISH: 45 = GOLD ALL OVER NICKEL

No. OF CONTACTS PER ROW	DIM 'A'	DIM 'B'
20	51.46	48.26
32	81.94	78.74

NAME	ISS.	DATE	C/NOTE
FM	13	16.04.18	21227

APPROVED: F. MCGOWAN
CHECKED: M. PLESTED
DRAWN: W.J.BOURNE
CUSTOMER REF.:
ASSEMBLY DRG:

HARWIN
www.harwin.com
technical@harwin.com

THIS DRAWING AND ANY INFORMATION OR DESCRIPTIVE MATTER SET OUT HEREON ARE CONFIDENTIAL AND COPYRIGHT PROPERTY OF THE HARWIN GROUP AND MUST NOT BE DISCLOSED, LOANED, COPIED OR USED FOR MANUFACTURING, TENDERING OR FOR ANY OTHER PURPOSE WITHOUT THEIR WRITTEN PERMISSION.

TOLERANCES UNLESS STATED:
X. = ±1mm
X.X = ±0.50mm
X.XX = ±0.10mm
X.XXX = ±0.01mm
ANGLES = ±5°

MATERIAL: SEE ABOVE
FINISH: SEE ABOVE
S/AREA: mm²

TITLE: PC104 CONNECTOR (STACKTHROUGH)

DRAWING NUMBER: M20-610XX45

SHT 2 OF 2