LT3759
Wide Input Voltage Range Boost/SEPIC/Inverting Controller

DESCRIPTION

Demonstration circuit 1787A is a wide input voltage range SEPIC converter featuring the LT3759 controller. It converts a 2.8V~36V input to a 12V output, with 1A load current capability for $V_{IN} \geq 4V$. The converter operates at a 300 kHz nominal switching frequency, with 91% peak efficiency. The DC1787A can be easily modified to generate other output voltages, and can also be optimized for efficiency and size with narrower input voltage ranges.

The LT3759 is a boost/SEPIC/Inverting controller with a wide input voltage range, suitable for applications from single-cell lithium-ion battery portable electronics to high voltage automotive and industrial power supplies. It also exhibits low shutdown quiescent current of 1µA, making it an ideal fit for battery-operated systems. Thanks to a novel FBX pin architecture, the LT3759 can be connected directly to a divider from either positive output or negative output voltage to ground. It also packs many popular features such as soft-start, input undervoltage lockout, adjustable frequency and synchronization in a small 12-lead exposed pad MSOP package.

The LT3759 data sheet gives a complete description of the part, operation and application information. The data sheet must be read in conjunction with this quick start guide for demo circuit 1787A.

Design files for this circuit board are available at http://www.linear.com/demo

LT, LTC, LTM, Linear Technology and the Linear logo are registered trademarks of Linear Technology Corporation. All other trademarks are the property of their respective owners.

PERFORMANCE SUMMARY (T_A = 25°C)

PARAMETER	CONDITIONS	MIN	TYP	MAX	UNITS
Input Voltage Range, V_{IN}		2.8	12	36	V
Minimum Startup Voltage				3.0	V
Switching Frequency	I_{OUT} = 0.5A		300		kHz
Output Voltage, V_{OUT}	V_{IN} = 2.8V~36V I_{OUT} = 0mA~0.5A	11.64	12.0	12.36	V
Maximum Continuous Output Current, I_{OUT}	$V_{IN} \geq 2.8V$	0.5			A
	$V_{IN} \geq 4.0V$	1			A
Output Voltage Ripple (Peak-to-Peak)	V_{IN} = 12V, I_{OUT} = 1A		90		mV
Typical Efficiency	V_{IN} = 12V, I_{OUT} = 1A		91		%

QUICK START PROCEDURE

Demo circuit 1787A is easy to set up to evaluate the performance of the LT3759. Refer to Figure 1 for proper measurement equipment setup and follow the procedure.

1. With power off, connect the input power supply to the V_{IN} (E1) and GND (E2) terminals on the demo circuit.

NOTE: Minimize the voltage drop and transient on the input wires between the power supply and input terminals of the demo circuit.

2. Connect load to the V_{OUT} (E6) and GND (E5) terminals on the demo circuit. Connect voltage and current meters as shown in Figure 1. Preset the load to 0.5A or less, and V_{IN} supply to be 0V.

3. Place jumpers in the following positions for a typical 12V application:

EN (JP1)	SYNC (JP2)
ON	OFF

4. Turn on the power supply at the input. Slowly increase V_{IN} to 3.0V.

NOTE: Make sure the input voltage is within the range. If higher operating voltage is required, power components with higher voltage ratings should be used. The maximum input voltage of LT3759 is 42V.

NOTE: The output current capability depends on the input voltage, as can be seen in Figure 3. Proper cooling is necessary for overload operations.

NOTE: The demo circuit configures the shutdown voltage at typical 2.5V, which means that the input voltage can be dropped to as low as 2.5V, once it starts up. The startup voltage is 3.0V but can be adjusted by changing R1 and R3 values.

5. Check for the proper output voltages. The output should be regulated at 12V (±3%).

NOTE: If there is no output, or output is out of spec, temporarily disconnect the load from the demo board. Make sure the load current is set within spec, and the power supply current capability is above 4A.

6. Once the proper output voltage is established, adjust the input and load within the operating range and observe the output voltage regulation, ripple voltage, efficiency and other parameters. Typical efficiency curve, regulation, and operation waveforms are shown in Figures 3 and 4, respectively.

NOTE: When measuring the input or output voltage ripples, care must be taken to avoid a long ground lead on the oscilloscope probe. Measure the input or output voltage ripple by touching the probe tip directly across the V_{IN} and GND, or V_{OUT} and GND terminals. See Figure 2 for proper scope probe technique.

QUICK START PROCEDURE

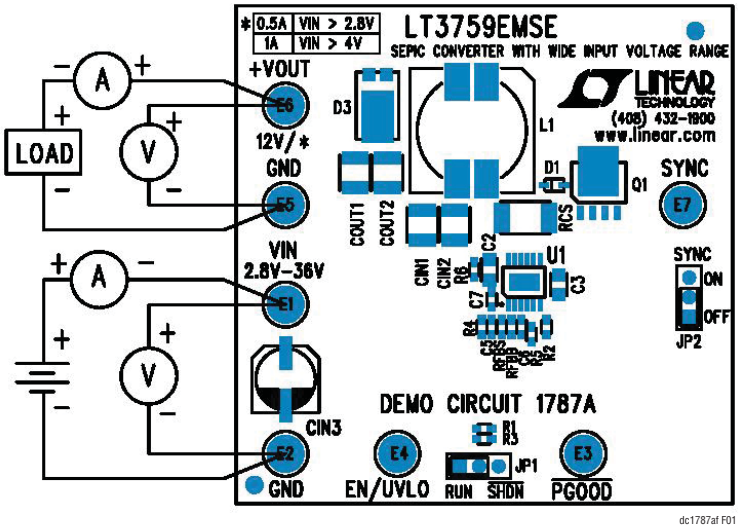

Figure 1. Proper Measurement Equipment Setup

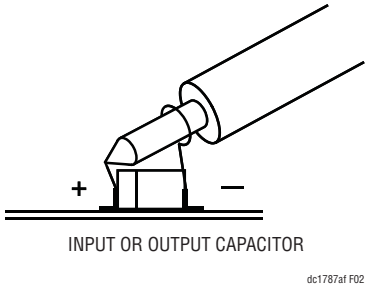

Figure 2. Proper Scope Probe Placement for Measuring Input or Output Ripple

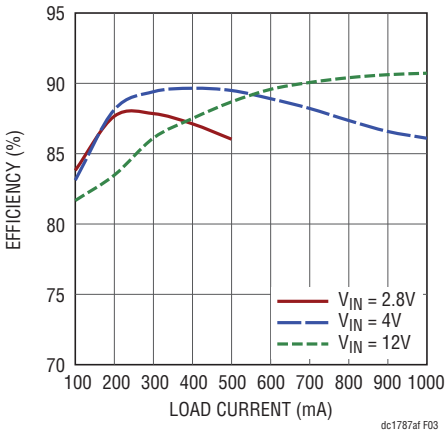

Figure 3. Efficiency Curves

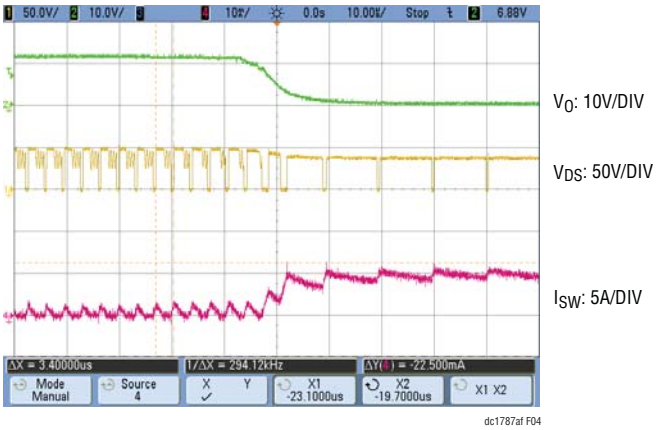

Figure 4. Short Circuit Waveforms with Frequency Foldback

PARTS LIST

ITEM	QTY	REFERENCE	PART DESCRIPTION	MANUFACTURER/PART NUMBER
Required Circuit Components				
1	2	CIN1, CIN2	CAP., X7R, 10µF, 50V, 10%, 1210	MURATA, GRM32ER71H106KA12L
2	1	CIN3	CAP., ELECT., 22µF, 50V, C-CE-BS-6.3X6.0	SUN ELECT., 50CE22BS
3	2	COUT1, COUT2	CAP., X5R, 47µF, 16V, 10%, 1210	MURATA, GRM32ER61C476KE15L
4	1	C1	CAP., X7R, 4.7µF, 50V, 20%, 1210	MURATA, GRM32ER71H475KA88L
5	1	C2	CAP., X7R, 1µF, 50V 10%, 0805	MURATA, GRM21BR71H105KA12L
6	1	C3	CAP., X5R, 4.7µF, 16V, 10%, 0805	MURATA, GRM219R61C475KE15D
7	1	C5	CAP., X7R, 68nF, 50V, 0603	NIC, NMC0603X7R682K50F
8	1	C6	CAP., X7R, 0.1µF, 25V, 10%, 0603	TDK, C1608X7R1E104K
9	1	C7	CAP., C0G, 470pF, 50V, 5%, 0603	MURATA, GCM1885C1H471JA16D
10	1	D3	DIODE, SCHOTTKY, 3A, POWERDI5	DIODES/ZETEX, PDS360-13
11	1	L1	IND, 15µH, L-DUAL-DRQ127	COILTRONICS, DRQ127-150-R
12	1	Q1	MOSFET, N-CHANNEL, LFPAK	RENESAS, RJK0652DPB-00-J5
13	1	RCS	RES SENSE, 0.005Ω, 1/2W, 1%, 2010	VISHAY, WSL20105L000FEA
14	1	RFBB	RES., CHIP, 15.8k, 1/16W, 1%, 0603	VISHAY, CRCW060315K8FKEA
15	1	RFBS	RES., CHIP, 102k, 1/16W, 1%, 0603	VISHAY, CRCW0603102KFKEA
16	1	R1	RES., CHIP, 249k, 1/16W, 1%, 0603	VISHAY, CRCW0603249KFKEA
17	1	R2	RES., CHIP, 100k, 1/16W, 5%, 0603	VISHAY, CRCW0603100KJNEA
18	1	R3	RES., CHIP, 255k, 1/16W, 1%, 0603	VISHAY, CRCW0603255KFKEA
19	1	R4	RES., CHIP, 1.43k, 1/16W, 1%, 0603	VISHAY, CRCW06031K43FKEA
20	1	R5	RES., CHIP, 27.4k, 1/16W, 1%, 0603	VISHAY, CRCW060327K4FKEA
21	1	R6	RES., CHIP, 0Ω, 0603	VISHAY, CRCW06030000Z0ED
22	1	U1	I.C. LT3759EMSE, MSE12	LINEAR TECH.,LT3759EMSE
Hardware/Components (For Demo Board Only)				
1	7	E1, E2, E3, E4, E5, E6, E7	TESTPOINT, TURRET, .094"	MILL-MAX, 2501-2-00-80-00-00-07-0
2	2	JP1, JP2	JMP, 3-PIN, 1 ROW .079CC	SAMTEC, TMM-103-02-L-S
3	2	SHUNTS AS SHOWN ON ASSY DWG	SHUNT, .079" CENTER	SAMTEC, 2SN-BK-G
4	2	STENCILS BOTH SIDES		DC1787A-2
Additional Demo Board Circuit Components				
1	0	D1	DIODE, FAST SWITCHING, 1N4148WT, SOD523F	OPT

SCHEMATIC DIAGRAM

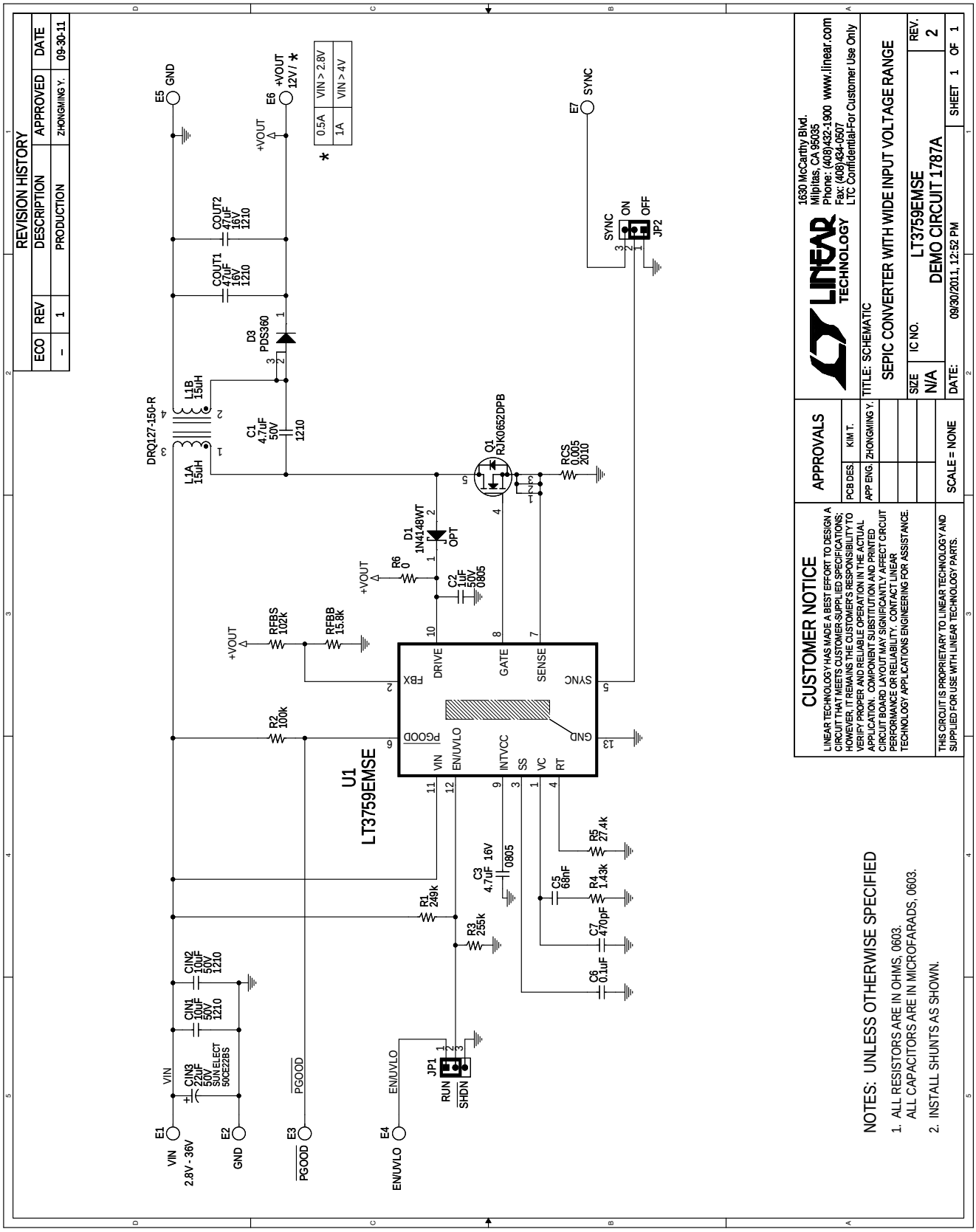

Information furnished by Linear Technology Corporation is believed to be accurate and reliable. However, no responsibility is assumed for its use. Linear Technology Corporation makes no representation that the interconnection of its circuits as described herein will not infringe on existing patent rights.

DEMONSTRATION BOARD IMPORTANT NOTICE

Linear Technology Corporation (LTC) provides the enclosed product(s) under the following **AS IS** conditions:

This demonstration board (DEMO BOARD) kit being sold or provided by Linear Technology is intended for use for **ENGINEERING DEVELOPMENT OR EVALUATION PURPOSES ONLY** and is not provided by LTC for commercial use. As such, the DEMO BOARD herein may not be complete in terms of required design-, marketing-, and/or manufacturing-related protective considerations, including but not limited to product safety measures typically found in finished commercial goods. As a prototype, this product does not fall within the scope of the European Union directive on electromagnetic compatibility and therefore may or may not meet the technical requirements of the directive, or other regulations.

If this evaluation kit does not meet the specifications recited in the DEMO BOARD manual the kit may be returned within 30 days from the date of delivery for a full refund. THE FOREGOING WARRANTY IS THE EXCLUSIVE WARRANTY MADE BY THE SELLER TO BUYER AND IS IN LIEU OF ALL OTHER WARRANTIES, EXPRESSED, IMPLIED, OR STATUTORY, INCLUDING ANY WARRANTY OF MERCHANTABILITY OR FITNESS FOR ANY PARTICULAR PURPOSE. EXCEPT TO THE EXTENT OF THIS INDEMNITY, NEITHER PARTY SHALL BE LIABLE TO THE OTHER FOR ANY INDIRECT, SPECIAL, INCIDENTAL, OR CONSEQUENTIAL DAMAGES.

The user assumes all responsibility and liability for proper and safe handling of the goods. Further, the user releases LTC from all claims arising from the handling or use of the goods. Due to the open construction of the product, it is the user's responsibility to take any and all appropriate precautions with regard to electrostatic discharge. Also be aware that the products herein may not be regulatory compliant or agency certified (FCC, UL, CE, etc.).

No License is granted under any patent right or other intellectual property whatsoever. **LTC assumes no liability for applications assistance, customer product design, software performance, or infringement of patents or any other intellectual property rights of any kind.**

LTC currently services a variety of customers for products around the world, and therefore this transaction **is not exclusive**.

Please read the DEMO BOARD manual prior to handling the product. Persons handling this product must have electronics training and observe good laboratory practice standards. **Common sense is encouraged**.

This notice contains important safety information about temperatures and voltages. For further safety concerns, please contact a LTC application engineer.

Mailing Address:

Linear Technology

1630 McCarthy Blvd.

Milpitas, CA 95035

Copyright © 2004, Linear Technology Corporation

Linear Technology Corporation
1630 McCarthy Blvd., Milpitas, CA 95035-7417
(408) 432-1900 • FAX: (408) 434-0507 • www.linear.com

LT 1111 • PRINTED IN USA

© LINEAR TECHNOLOGY CORPORATION 2011