HIN202, HIN206, HIN207, HIN208, HIN211, HIN213

+5V Powered RS-232 Transmitters/Receivers with 0.1Microfarad External Capacitors

FN3980
Rev 19.00
August 6, 2015

The HIN202, HIN206, HIN207, HIN208, HIN211, HIN213 family of RS-232 transmitters/receivers interface circuits meet all EIA RS-232E and V.28 specifications, and are particularly suited for those applications where ±12V is not available. They require a single +5V power supply and feature onboard charge pump voltage converters which generate +10V and -10V supplies from the 5V supply. The family of devices offers a wide variety of RS-232 transmitter/receiver combinations to accommodate various applications (see Selection Table).

The HIN206, HIN211 and HIN213 feature a low power shutdown mode to conserve energy in battery powered applications. In addition, the HIN213 provides two active receivers in shutdown mode allowing for easy “wakeup” capability.

The drivers feature true TTL/CMOS input compatibility, slew rate-limited output, and 300Ω power-off source impedance. The receivers can handle up to ±30V input, and have a 3kΩ to 7kΩ input impedance. The receivers also feature hysteresis to greatly improve noise rejection.

Applications

- Any System Requiring RS-232 Communications Port
  - Computer - Portable, Mainframe, Laptop
  - Peripheral - Printers and Terminals
  - Instrumentation
  - Modems

Features

- Pb-Free Plus Anneal Available (RoHS Compliant) (See Ordering Info)
- Meets All RS-232E and V.28 Specifications
- Requires Only 0.1µF or Greater External Capacitors
- High Data Rate. 120kbit/s
- Two Receivers Active in Shutdown Mode (HIN213)
- Requires Only Single +5V Power Supply
- Onboard Voltage Doubler/Inverter
- Low Power Consumption (Typ) 5mA
- Low Power Shutdown Function (Typ) 1µA
- Three-State TTL/CMOS Receiver Outputs
- Multiple Drivers
  - ±10V Output Swing for +5V Input
  - 300Ω Power-Off Source Impedance
  - Output Current Limiting
  - TTL/CMOS Compatible
  - 30V/µs Maximum Slew Rate
- Multiple Receivers
  - ±30V Input Voltage Range
  - 3kΩ to 7kΩ Input Impedance
  - 0.5V Hysteresis to Improve Noise Rejection

Selection Table

PART NUMBER	POWER SUPPLY VOLTAGE	NUMBER OF RS-232 DRIVERS	NUMBER OF RS-232 RECEIVERS	NUMBER OF 0.1µF EXTERNAL CAPACITORS	LOW POWER SHUTDOWN/TTL THREE-STATE	NUMBER OF RECEIVERS ACTIVE IN SHUTDOWN
HIN202	+5V	2	2	4 Capacitors	No/No	0
HIN206	+5V	4	3	4 Capacitors	Yes/Yes	0
HIN207	+5V	5	3	4 Capacitors	No/No	0
HIN208	+5V	4	4	4 Capacitors	No/No	0
HIN211	+5V	4	5	4 Capacitors	Yes/Yes	0
HIN213	+5V	4	5	4 Capacitors	Yes/Yes	2

Ordering Information

PART NO.	TEMP. RANGE (°C)	PACKAGE	PKG. DWG. #
HIN202CBZ (See Note)	0 to 70	16 Ld SOIC (W) (Pb-free)	M16.3
HIN202CBZ-T (See Note)	0 to 70	16 Ld SOIC (W) Tape and Reel (Pb-free)	M16.3
HIN202CBNZ (See Note)	0 to 70	16 Ld SOIC (N) (Pb-free)	M16.15
HIN202CBNZ-T (See Note)	0 to 70	16 Ld SOIC (N) Tape and Reel (Pb-free)	M16.15
HIN202CPZ (See Note)	0 to 70	16 Ld PDIP	E16.3
HIN202IBZ (See Note)	-40 to 85	16 Ld SOIC (W) (Pb-free)	M16.3
HIN202IBNZ (See Note)	-40 to 85	16 Ld SOIC (N) (Pb-free)	M16.15
HIN202IBNZ-T (See Note)	-40 to 85	16 Ld SOIC (N) Tape and Reel (Pb-free)	M16.15
HIN207CAZ (See Note) **(No longer available, recommended replacement: HIN207ECAZ)**	0 to 70	24 Ld SSOP (Pb-free)	M24.209
HIN207CAZ-T (See Note) **(No longer available, recommended replacement: HIN207ECAZ-T)**	0 to 70	24 Ld SSOP Tape and Reel (Pb-free)	M24.209

Ordering Information (Continued)

PART NO.	TEMP. RANGE (°C)	PACKAGE	PKG. DWG. #
HIN208CBZ (See Note) **(No longer available, recommended replacement: HIN208ECBZ-T)**	0 to 70	24 Ld SOIC (Pb-free)	M24.3
HIN208CBZ-T (See Note) **(No longer available, recommended replacement: HIN208ECBZ-T)**	0 to 70	24 Ld SOIC Tape and Reel (Pb-free)	M24.3
HIN211CAZ (See Note)	0 to 70	28 Ld SSOP (Pb-free)	M28.209
HIN211CAZ-T (See Note)	0 to 70	28 Ld SSOP Tape and Reel (Pb-free)	M28.209
HIN211CBZ (See Note)	0 to 70	28 Ld SOIC (Pb-free)	M28.3
HIN211CBZ-T (See Note)	0 to 70	28 Ld SOIC Tape and Reel (Pb-free)	M28.3
HIN213CAZ (See Note)	0 to 70	28 Ld SSOP (Pb-free)	M28.209
HIN213CAZ-T (See Note)	0 to 70	28 Ld SSOP Tape and Reel (Pb-free)	M28.209

NOTE: Intersil Pb-free plus anneal products employ special Pb-free material sets; molding compounds/die attach materials and 100% matte tin plate termination finish, which are RoHS compliant and compatible with both SnPb and Pb-free soldering operations. Intersil Pb-free products are MSL classified at Pb-free peak reflow temperatures that meet or exceed the Pb-free requirements of IPC/JEDEC J STD-020.

Pin Descriptions

PIN	FUNCTION
V_{CC}	Power Supply Input 5V ±10%, (5V ±5% HIN207).
V+	Internally generated positive supply (+10V nominal).
V-	Internally generated negative supply (-10V nominal).
GND	Ground Lead. Connect to 0V.
C1+	External capacitor (+ terminal) is connected to this lead.
C1-	External capacitor (- terminal) is connected to this lead.
C2+	External capacitor (+ terminal) is connected to this lead.
C2-	External capacitor (- terminal) is connected to this lead.
T_{IN}	Transmitter Inputs. These leads accept TTL/CMOS levels. An internal 400kΩ pull-up resistor to V_{CC} is connected to each lead.
T_{OUT}	Transmitter Outputs. These are RS-232 levels (nominally ±10V).
R_{IN}	Receiver Inputs. These inputs accept RS-232 input levels. An internal 5kΩ pull-down resistor to GND is connected to each input.
R_{OUT}	Receiver Outputs. These are TTL/CMOS levels.
$\overline{EN}$, EN	Receiver enable Input. With $\overline{EN}$ = 5V (HIN213 EN = 0V), the receiver outputs are placed in a high impedance state.
SD, $\overline{SD}$	Shutdown Input. With SD = 5V (HIN213 $\overline{SD}$ = 0V), the charge pump is disabled, the receiver outputs are in a high impedance state (except R4 and R5 of HIN213) and the transmitters are shut off.
NC	No Connect. No connections are made to these leads.

Pinouts

HIN202 (PDIP, SOIC)
TOP VIEW

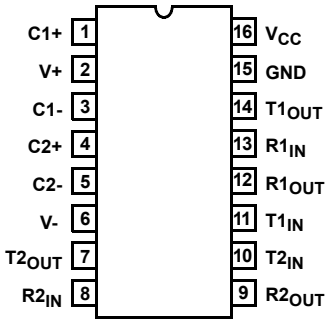

HIN206 (SOIC)
TOP VIEW

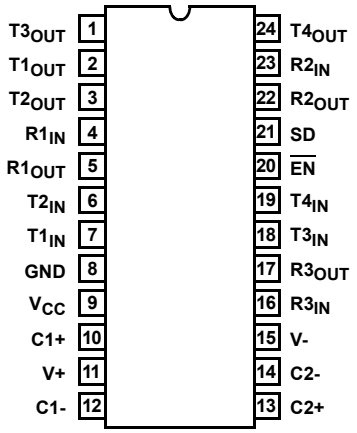

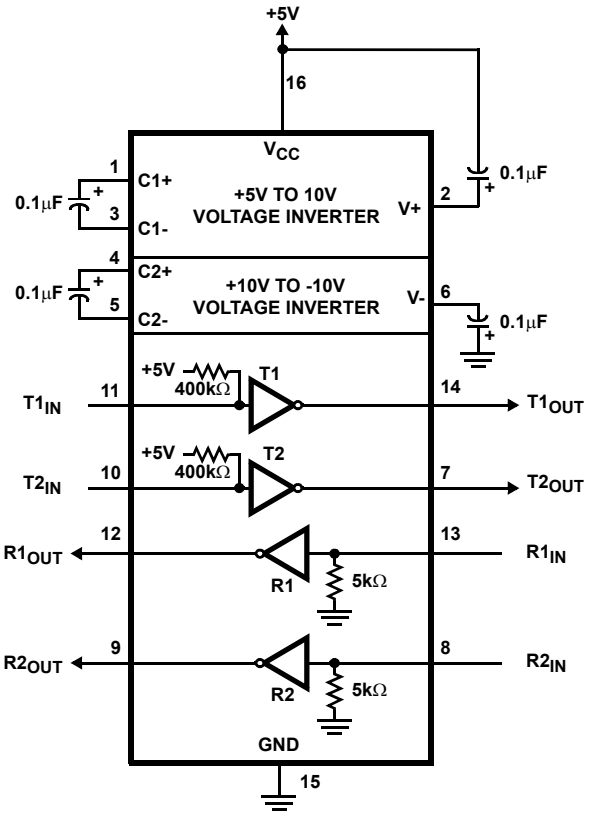

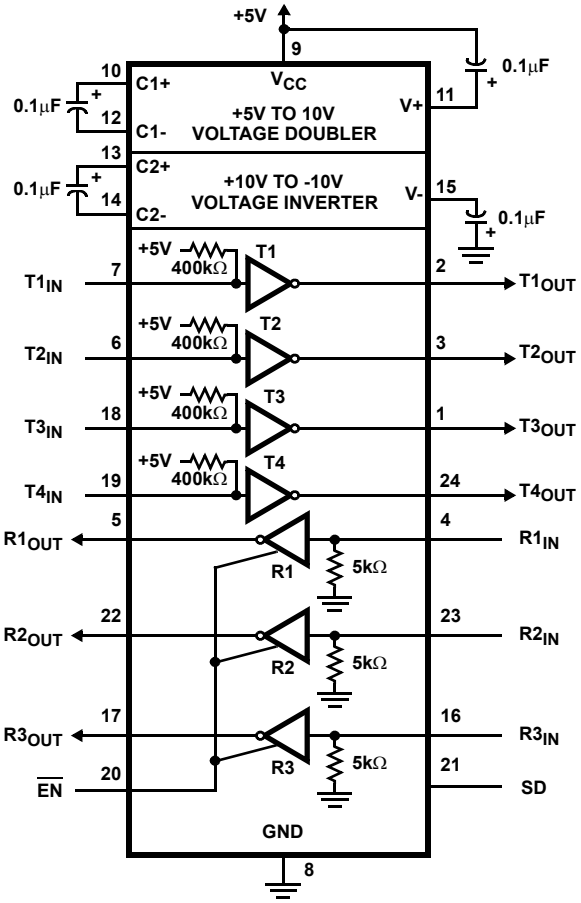

Pinouts (Continued)

HIN207 (SOIC, SSOP)
TOP VIEW

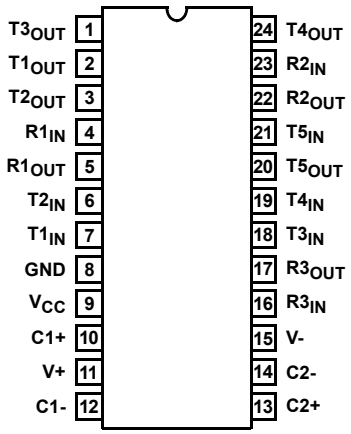

HIN208 (SOIC)
TOP VIEW

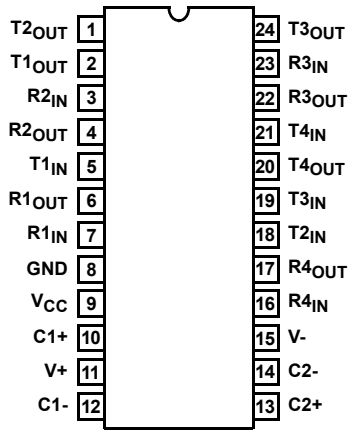

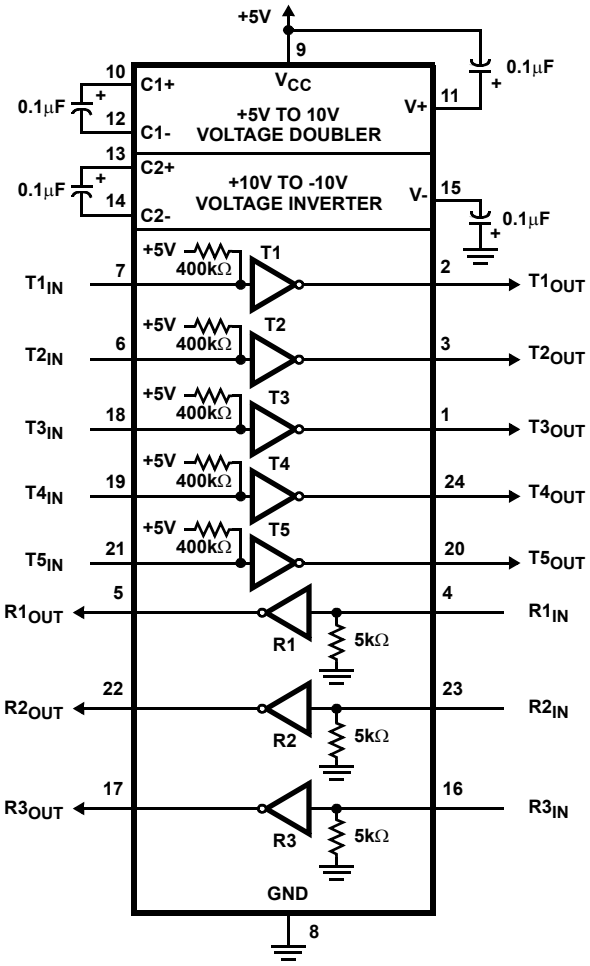

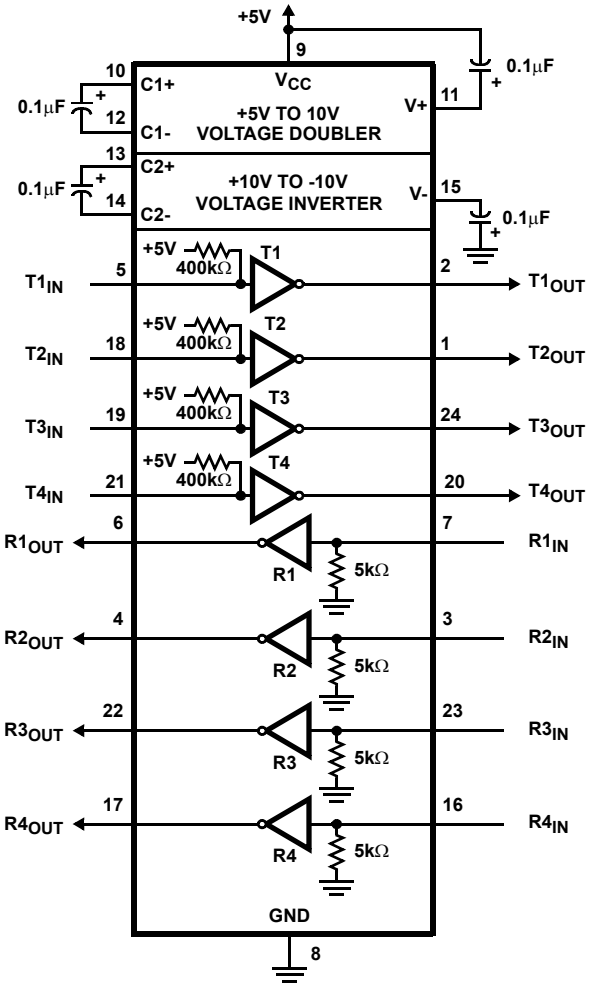

Pinouts (Continued)

HIN211 (SOIC, SSOP)
TOP VIEW

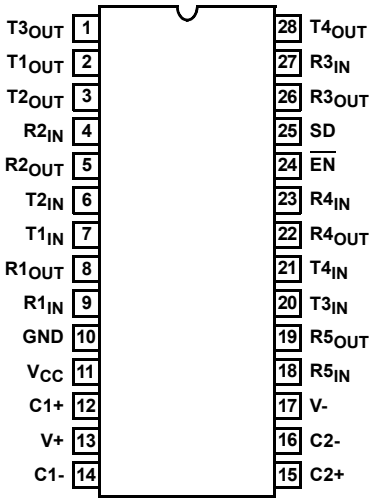

HIN213 (SSOP)
TOP VIEW

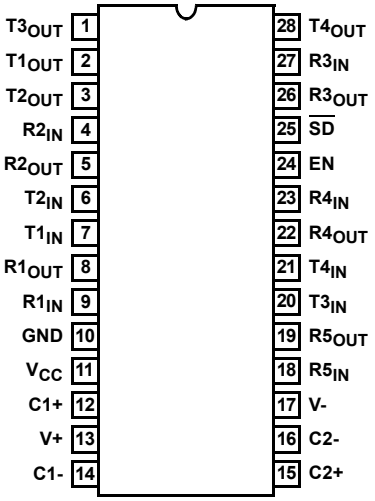

NOTE: R4 and R5 active in shutdown.

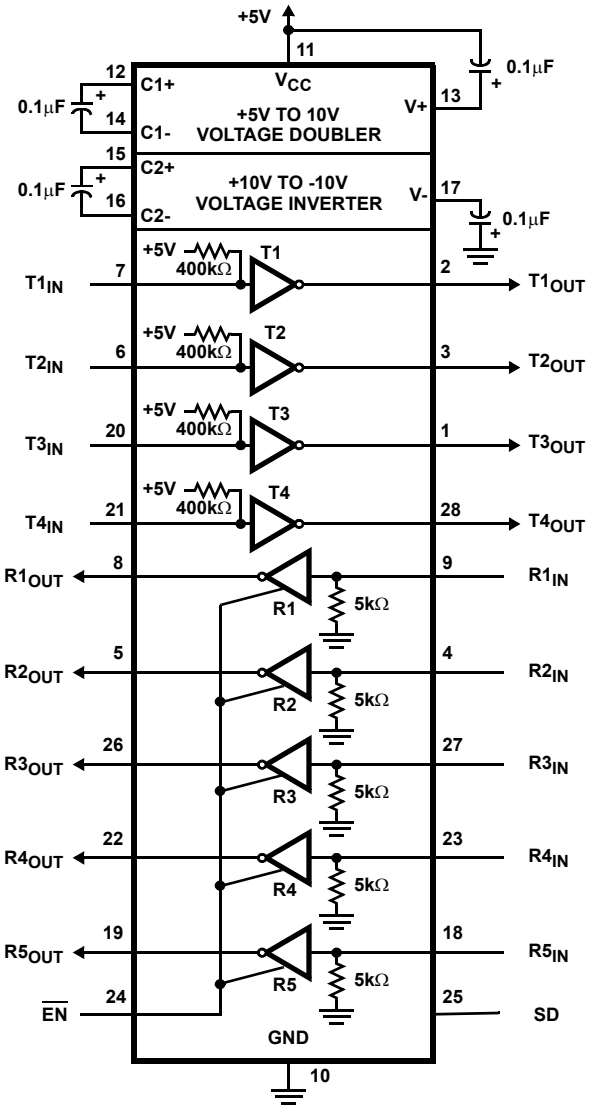

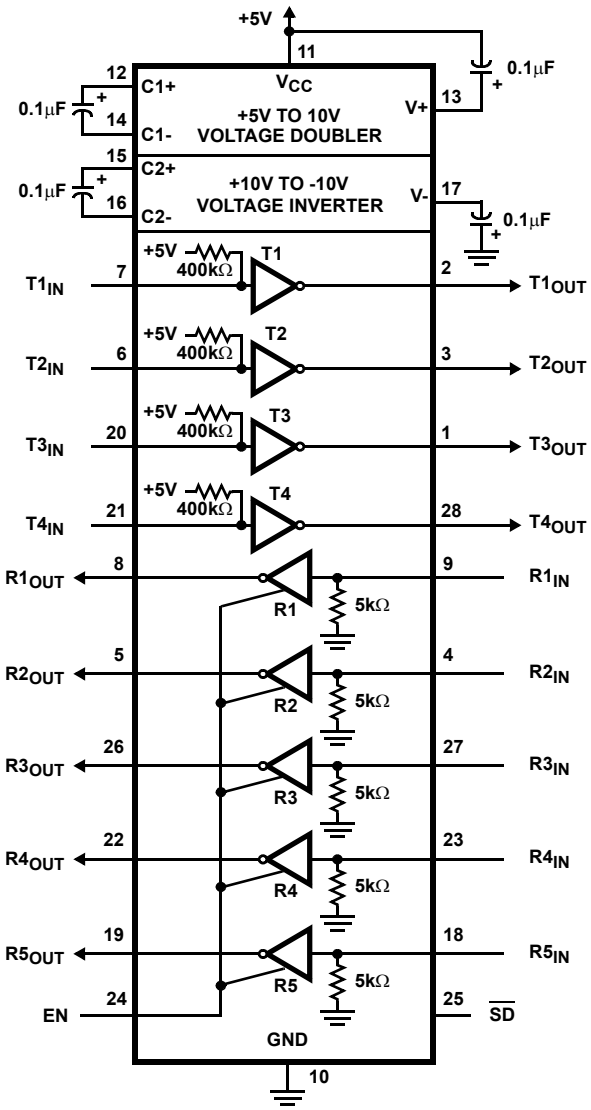

Absolute Maximum Ratings

V_{CC} to Ground . . . . . (GND -0.3V) <V_{CC} < 6V
V+ to Ground . . . . . (V_{CC} -0.3V) <V+ < 12V
V- to Ground . . . . . -12V < V- < (GND +0.3V)
Input Voltages
  T_{IN} . . . . . -0.3V < V_{IN} < (V+ +0.3V)
  R_{IN} . . . . . ±30V
Output Voltages
  T_{OUT} . . . . . (V- -0.3V) < V_{TXOUT} < (V+ +0.3V)
  R_{OUT} . . . . . (GND -0.3V) < V_{RXOUT} < (V+ +0.3V)
Short Circuit Duration
  T_{OUT} . . . . . Continuous
  R_{OUT} . . . . . Continuous
ESD Classification . . . . . Class 1

Operating Conditions

Temperature Range
  HIN2XXCX . . . . . 0°C to 70°C
  HIN2XXIX . . . . . -40°C to 85°C

Thermal Information

Thermal Resistance (Typical, Note 1)	θ_{JA} (°C/W)
16 Ld PDIP Package	90
16 Ld SOIC (N) Package	110
16 Ld SOIC (W) Package	100
24 Ld SOIC Package	75
24 Ld SSOP Package	135
28 Ld SOIC Package	70
28 Ld SSOP Package	100

Maximum Junction Temperature (Plastic Package) . . . . . 150°C
Maximum Storage Temperature Range . . . . . -65°C to 150°C
Maximum Lead Temperature (Soldering 10s) . . . . . 300°C
  (SOIC and SSOP - Lead Tips Only)

CAUTION: Stresses above those listed in "Absolute Maximum Ratings" may cause permanent damage to the device. This is a stress only rating and operation of the device at these or any other conditions above those indicated in the operational sections of this specification is not implied.

NOTE:

1. θ_{JA} is measured with the component mounted on a low effective thermal conductivity test board in free air. See Tech Brief TB379 for details.

Electrical Specifications

Test Conditions: V_{CC} = +5V ±10%, (V_{CC} = +5V ±5%, HIN207); C1-C4 = 0.1µF; T_A = Operating Temperature Range

PARAMETER	TEST CONDITIONS		MIN	TYP	MAX	UNITS
SUPPLY CURRENTS						
Power Supply Current, I_{CC}	No Load, T_A = 25°C	HIN202	-	8	15	mA
		HIN206, HIN207, HIN208, HIN211, HIN213	-	11	20	mA
Shutdown Supply Current, I_{CC}(SD)	T_A = 25°C	HIN206, HIN211	-	1	10	µA
		HIN213	-	15	50	µA
LOGIC AND TRANSMITTER INPUTS, RECEIVER OUTPUTS						
Input Logic Low, V_{IL}	T_{IN}, $\overline{EN}$, SD, EN, $\overline{SD}$		-	-	0.8	V
Input Logic High, V_{IH}	T_{IN}		2.0	-	-	V
	$\overline{EN}$, SD, EN, $\overline{SD}$		2.4	-	-	V
Transmitter Input Pullup Current, I_P	T_{IN} = 0V		-	15	200	µA
TTL/CMOS Receiver Output Voltage Low, V_{OL}	I_{OUT} = 1.6mA (HIN202, I_{OUT} = 3.2mA)		-	0.1	0.4	V
TTL/CMOS Receiver Output Voltage High, V_{OH}	I_{OUT} = -1mA		3.5	4.6	-	V
TTL/CMOS Receiver Output Leakage	$\overline{EN}$ = V_{CC}, EN = 0, 0V < R_{OUT} < V_{CC}		-	0.05	±10	µA
RECEIVER INPUTS						
RS-232 Input Voltage Range, V_{IN}			-30	-	+30	V
Receiver Input Impedance, R_{IN}	T_A = 25°C, V_{IN} = ±3V		3.0	5.0	7.0	kΩ
Receiver Input Low Threshold, V_{IN} (H-L)	V_{CC} = 5V, T_A = 25°C	Active Mode	0.8	1.2	-	V
		Shutdown Mode HIN213 R4 and R5	0.6	1.5	-	V
Receiver Input High Threshold, V_{IN} (L-H)	V_{CC} = 5V, T_A = 25°C	Active Mode	-	1.7	2.4	V
		Shutdown Mode HIN213 R4 and R5	-	1.5	2.4	V
Receiver Input Hysteresis, V_{HYST}	V_{CC} = 5V No Hysteresis in Shutdown Mode		0.2	0.5	1.0	V

Electrical Specifications Test Conditions: V_{CC} = +5V ±10%, (V_{CC} = +5V ±5%, HIN207); C1-C4 = 0.1µF; T_A = Operating Temperature Range **(Continued)**

PARAMETER	TEST CONDITIONS		MIN	TYP	MAX	UNITS
TIMING CHARACTERISTICS						
Baud Rate	1 Transmitter Switching	R_L = 3kΩ	120	-	-	kbps
Output Enable Time, t_{EN}	HIN206, HIN211, HIN213		-	400	-	ns
Output Disable Time, t_{DIS}	HIN206, HIN211, HIN213		-	200	-	ns
Transmitter, Receiver Propagation Delay, t_{PD}	HIN213 $\overline{SD}$ = 0V, R4, R5		-	0.5	40	µs
	HIN213 $\overline{SD}$ = V_{CC}, R1 - R5		-	0.5	10	µs
	HIN202, HIN206, HIN207, HIN208, HIN211		-	0.5	10	µs
Transition Region Slew Rate, SR_T	R_L = 3kΩ, C_L = 2500pF Measured from +3V to -3V or -3V to +3V, 1 Transmitter Switching (Note 2)		3	-	30	V/µs
TRANSMITTER OUTPUTS						
Output Voltage Swing, T_{OUT}	Transmitter Outputs, 3kΩ to Ground		±5	±9	±10	V
Output Resistance, T_{OUT}	V_{CC} = V+ = V- = 0V, V_{OUT} = ±2V		300	-	-	Ω
RS-232 Output Short Circuit Current, I_{SC}	T_{OUT} Shorted to GND		-	±10	-	mA

NOTE:

2. Guaranteed by design.

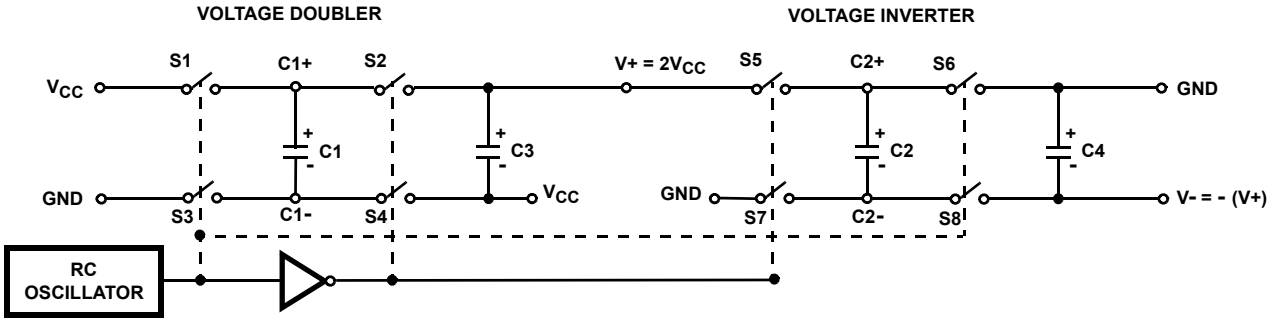

FIGURE 1. CHARGE PUMP

Detailed Description

The HIN202, HIN206, HIN207, HIN208, HIN211, HIN213 family of RS-232 transmitters/receivers are powered by a single +5V power supply feature low power consumption, and meet all EIA RS232C and V.28 specifications. The circuit is divided into three sections: The charge pump, transmitter, and receiver.

Charge Pump

An equivalent circuit of the charge pump is illustrated in Figure 1. The charge pump contains two sections: the voltage doubler and the voltage inverter. Each section is driven by a two phase, internally generated clock to generate +10V and -10V. The nominal clock frequency is 125kHz. During phase one of the clock, capacitor C1 is charged to V_{CC}. During phase two, the voltage on C1 is added to V_{CC}, producing a signal across C3 equal to twice V_{CC}. During phase two, C2 is also charged to $2V_{CC}$, and then during phase one, it is inverted with respect to ground to produce a signal across C4 equal to $-2V_{CC}$. The charge pump accepts input voltages up to 5.5V. The output impedance of the voltage doubler section (V+) is approximately 200Ω, and the output impedance of the voltage inverter section (V-) is approximately 450Ω. A typical application uses 0.1µF capacitors for C1-C4, however, the value is not critical. Increasing the values of C1 and C2 will lower the output impedance of the voltage doubler and inverter, increasing the values of the reservoir capacitors, C3 and C4, lowers the ripple on the V+ and V- supplies.

During shutdown mode (HIN206 and HIN211, SD = V_{CC}, HIN213, SD = 0V) the charge pump is turned off, V+ is pulled down to V_{CC}, V- is pulled up to GND, and the supply current is reduced to less than 10µA. The transmitter outputs are disabled and the receiver outputs (except for HIN213, R4 and R5) are placed in the high impedance state.

Transmitters

The transmitters are TTL/CMOS compatible inverters which translate the inputs to RS-232 outputs. The input logic threshold is about 26% of V_{CC}, or 1.3V for V_{CC} = 5V. A logic 1 at the input results in a voltage of between -5V and V- at the output, and a logic 0 results in a voltage between +5V and (V+ - 0.6V). Each transmitter input has an internal 400kΩ pullup resistor so any unused input can be left unconnected and its output remains in its low state. The output voltage swing meets the RS-232C specifications of ±5V minimum with the worst case conditions of: all transmitters driving 3kΩ minimum load impedance,
V_{CC} = 4.5V, and maximum allowable operating temperature. The transmitters have an internally limited output slew rate which is less than 30V/µs. The outputs are short circuit protected and can be shorted to ground indefinitely. The powered down output impedance is a minimum of 300Ω with ±2V applied to the outputs and V_{CC} = 0V.

Receivers

The receiver inputs accept up to ±30V while presenting the required 3kΩ to 7kΩ input impedance even if the power is off (V_{CC} = 0V). The receivers have a typical input threshold of 1.3V which is within the ±3V limits, known as the transition region, of the RS-232 specifications. The receiver output is 0V to V_{CC}. The output will be low whenever the input is greater than 2.4V and high whenever the input is floating or driven between +0.8V and -30V. The receivers feature 0.5V hysteresis (except during shutdown) to improve noise rejection. The receiver Enable line ($\overline{EN}$ on HIN206 and HIN211, EN on HIN213) when unasserted, disables the receiver outputs, placing them in the high impedance mode. The receiver outputs are also placed in the high impedance state when in shutdown mode (except HIN213 R4 and R5).

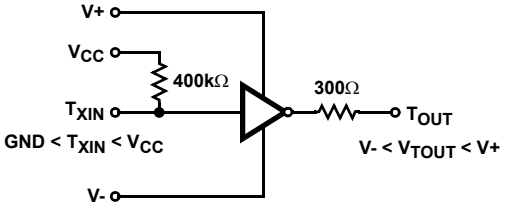

FIGURE 2. TRANSMITTER

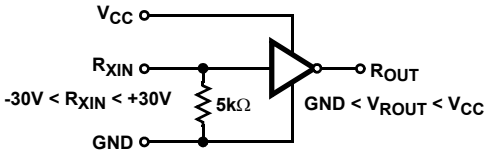

FIGURE 3. RECEIVER

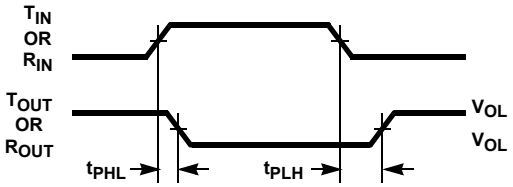

$$\text{AVERAGE PROPAGATION DELAY} = \frac{t_{PHL} + t_{PLH}}{2}$$

FIGURE 4. PROPAGATION DELAY DEFINITION

HIN213 Operation in Shutdown

The HIN213 features two receivers, R4 and R5, which remain active in shutdown mode. During normal operation the receivers propagation delay is typically 0.5µs. This propagation delay may increase slightly during shutdown. When entering shut down mode, receivers R4 and R5 are not valid for 80µs after $\overline{SD}$ = V_{IL}. When exiting shutdown mode, all receiver outputs will be invalid until the charge pump circuitry reaches normal operating voltage. This is typically less than 2ms when using 0.1µF capacitors.

Typical Performance Curves

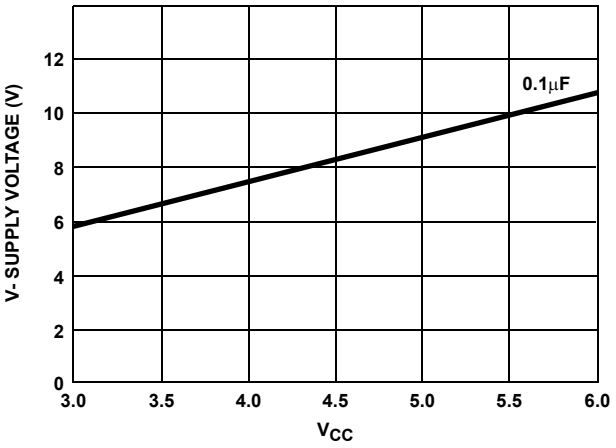

FIGURE 5. V- SUPPLY VOLTAGE vs V_{CC}

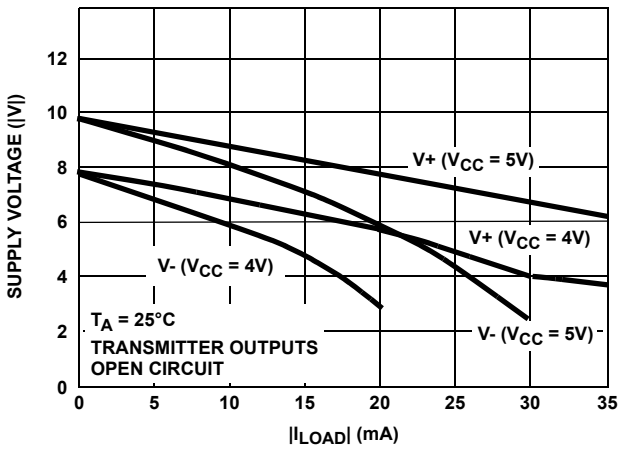

FIGURE 6. V+, V- OUTPUT VOLTAGE vs LOAD

Test Circuits (HIN202)

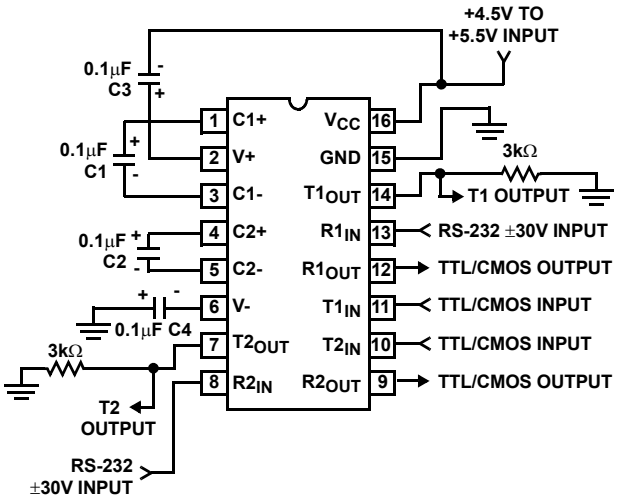

FIGURE 7. GENERAL TEST CIRCUIT

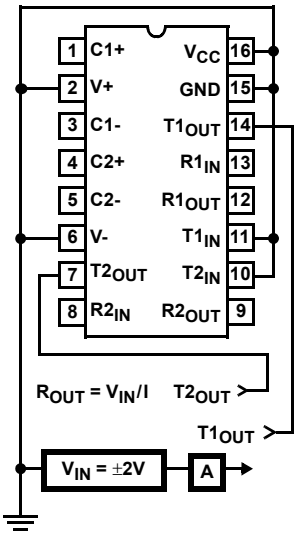

FIGURE 8. POWER-OFF SOURCE RESISTANCE CONFIGURATION

Application Information

The HIN2XX may be used for all RS-232 data terminal and communication links. It is particularly useful in applications where ±12V power supplies are not available for conventional RS-232 interface circuits. The applications presented represent typical interface configurations.

A simple duplex RS-232 port with CTS/RTS handshaking is illustrated in Figure 9. Fixed output signals such as DTR (data terminal ready) and DSRS (data signaling rate select) is generated by driving them through a 5kW resistor connected to V+.

In applications requiring four RS-232 inputs and outputs (Figure 10), note that each circuit requires two charge pump capacitors (C1 and C2) but can share common reservoir capacitors (C3 and C4). The benefit of sharing common reservoir capacitors is the elimination of two capacitors and the reduction of the charge pump source impedance which effectively increases the output swing of the transmitters.

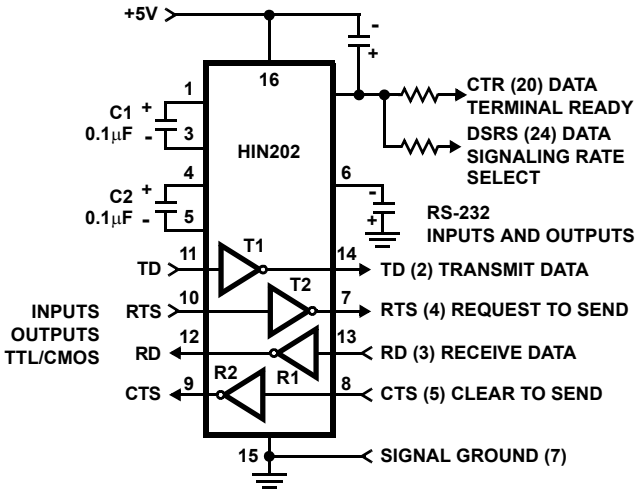

FIGURE 9. SIMPLE DUPLEX RS-232 PORT WITH CTS/RTS HANDSHAKING

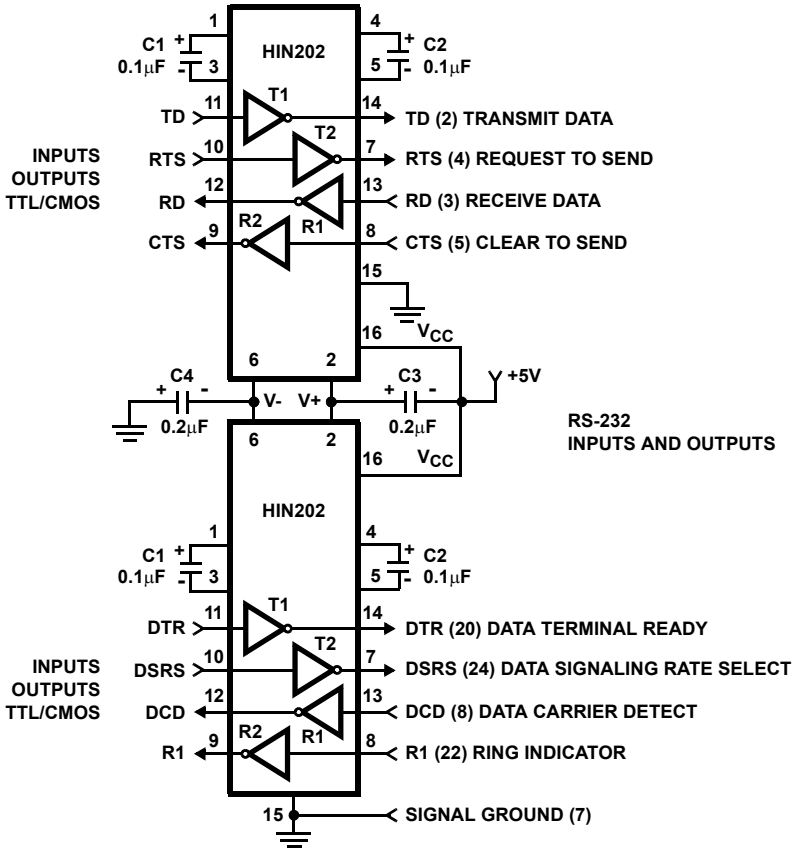

FIGURE 10. COMBINING TWO HIN202s FOR 4 PAIRS OF RS-232 INPUTS AND OUTPUTS

Die Characteristics

DIE DIMENSIONS:

160 mils x 140 mils

METALLIZATION:

Type: Al
Thickness: 10kÅ ±1kÅ
SUBSTRATE POTENTIAL
V+

PASSIVATION:

Type: Nitride over Silox
Nitride Thickness: 8kÅ
Silox Thickness: 7kÅ

TRANSISTOR COUNT:

238

PROCESS:

CMOS Metal Gate

Metallization Mask Layout

HIN211

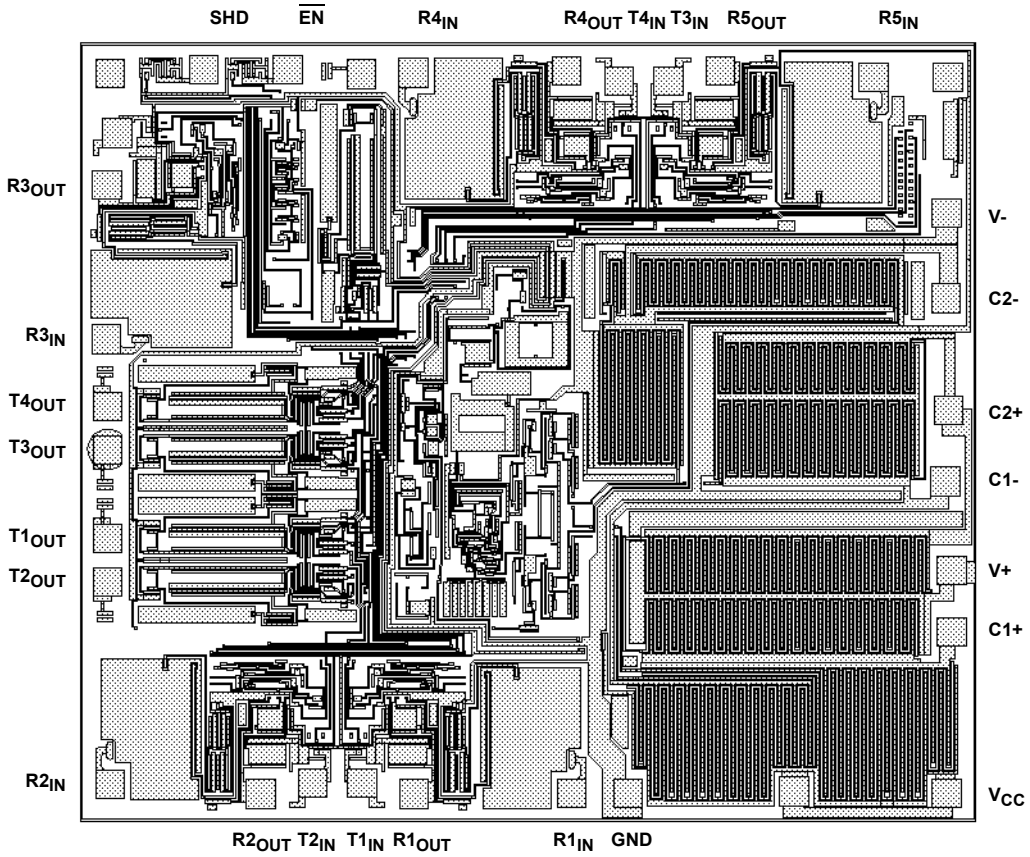

Revision History

The revision history provided is for informational purposes only and is believed to be accurate, but not warranted. Please go to the web to make sure that you have the latest revision.

DATE	REVISION	CHANGE
August 6, 2015	FN3980.19	Updated Ordering Information table on page 2. Added Revision History and About Intersil sections. Updated package outline drawings to the latest revision. Changes are listed as follows: M24.3 -Revision 0 to Revision 1, “Removed µ symbol which is overlapping the alpha symbol in the diagram.” -Revision 1 to Revision 2, “Updated to new POD standard by removing table listing dimensions and putting dimensions on drawing. Added Land Pattern.” M28.3 -Revision 0 to Revision 1, “Added land pattern”

About Intersil

Intersil Corporation is a leading provider of innovative power management and precision analog solutions. The company's products address some of the largest markets within the industrial and infrastructure, mobile computing and high-end consumer markets.

For the most updated datasheet, application notes, related documentation and related parts, please see the respective product information page found at www.intersil.com.

You may report errors or suggestions for improving this datasheet by visiting www.intersil.com/ask.

Reliability reports are also available from our website at www.intersil.com/support

Dual-In-Line Plastic Packages (PDIP)

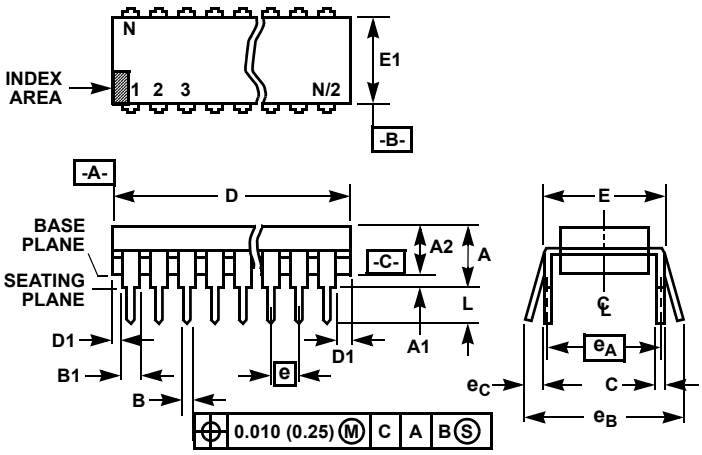

NOTES:

1. Controlling Dimensions: INCH. In case of conflict between English and Metric dimensions, the inch dimensions control.
2. Dimensioning and tolerancing per ANSI Y14.5M-1982.
3. Symbols are defined in the “MO Series Symbol List” in Section 2.2 of Publication No. 95.
4. Dimensions A, A1 and L are measured with the package seated in JEDEC seating plane gauge GS-3.
5. D, D1, and E1 dimensions do not include mold flash or protrusions. Mold flash or protrusions shall not exceed 0.010 inch (0.25mm).
6. E and e_A are measured with the leads constrained to be perpendicular to datum -C-.
7. e_B and e_C are measured at the lead tips with the leads unconstrained. e_C must be zero or greater.
8. B1 maximum dimensions do not include dambar protrusions. Dambar protrusions shall not exceed 0.010 inch (0.25mm).
9. N is the maximum number of terminal positions.
10. Corner leads (1, N, N/2 and N/2 + 1) for E8.3, E16.3, E18.3, E28.3, E42.6 will have a B1 dimension of 0.030 - 0.045 inch (0.76 - 1.14mm).

E16.3 **(JEDEC MS-001-BB ISSUE D)**
16 LEAD DUAL-IN-LINE PLASTIC PACKAGE

SYMBOL	INCHES		MILLIMETERS		NOTES
	MIN	MAX	MIN	MAX	
A	-	0.210	-	5.33	4
A1	0.015	-	0.39	-	4
A2	0.115	0.195	2.93	4.95	-
B	0.014	0.022	0.356	0.558	-
B1	0.045	0.070	1.15	1.77	8, 10
C	0.008	0.014	0.204	0.355	-
D	0.735	0.775	18.66	19.68	5
D1	0.005	-	0.13	-	5
E	0.300	0.325	7.62	8.25	6
E1	0.240	0.280	6.10	7.11	5
e	0.100 BSC		2.54 BSC		-
e_A	0.300 BSC		7.62 BSC		6
e_B	-	0.430	-	10.92	7
L	0.115	0.150	2.93	3.81	4
N	16		16		9

Rev. 0 12/93

Small Outline Plastic Packages (SOIC)

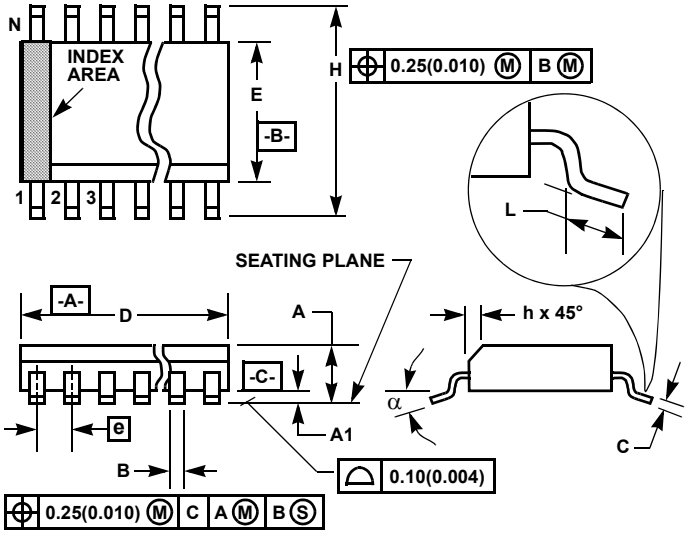

NOTES:

1. Symbols are defined in the “MO Series Symbol List” in Section 2.2 of Publication Number 95.
2. Dimensioning and tolerancing per ANSI Y14.5M-1982.
3. Dimension “D” does not include mold flash, protrusions or gate burrs. Mold flash, protrusion and gate burrs shall not exceed 0.15mm (0.006 inch) per side.
4. Dimension “E” does not include interlead flash or protrusions. Interlead flash and protrusions shall not exceed 0.25mm (0.010 inch) per side.
5. The chamfer on the body is optional. If it is not present, a visual index feature must be located within the crosshatched area.
6. “L” is the length of terminal for soldering to a substrate.
7. “N” is the number of terminal positions.
8. Terminal numbers are shown for reference only.
9. The lead width “B”, as measured 0.36mm (0.014 inch) or greater above the seating plane, shall not exceed a maximum value of 0.61mm (0.024 inch).
10. Controlling dimension: MILLIMETER. Converted inch dimensions are not necessarily exact.

M16.15 **(JEDEC MS-012-AC ISSUE C)**
16 LEAD NARROW BODY SMALL OUTLINE PLASTIC PACKAGE

SYMBOL	INCHES		MILLIMETERS		NOTES
	MIN	MAX	MIN	MAX	
A	0.0532	0.0688	1.35	1.75	-
A1	0.0040	0.0098	0.10	0.25	-
B	0.013	0.020	0.33	0.51	9
C	0.0075	0.0098	0.19	0.25	-
D	0.3859	0.3937	9.80	10.00	3
E	0.1497	0.1574	3.80	4.00	4
e	0.050 BSC		1.27 BSC		-
H	0.2284	0.2440	5.80	6.20	-
h	0.0099	0.0196	0.25	0.50	5
L	0.016	0.050	0.40	1.27	6
N	16		16		7
α	0°	8°	0°	8°	-

Rev. 1 6/05

Small Outline Plastic Packages (SOIC)

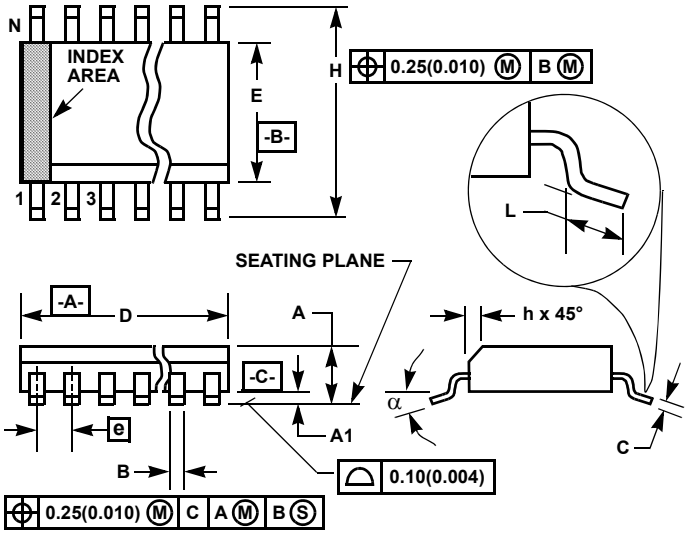

NOTES:

1. Symbols are defined in the “MO Series Symbol List” in Section 2.2 of Publication Number 95.
2. Dimensioning and tolerancing per ANSI Y14.5M-1982.
3. Dimension “D” does not include mold flash, protrusions or gate burrs. Mold flash, protrusion and gate burrs shall not exceed 0.15mm (0.006 inch) per side.
4. Dimension “E” does not include interlead flash or protrusions. Interlead flash and protrusions shall not exceed 0.25mm (0.010 inch) per side.
5. The chamfer on the body is optional. If it is not present, a visual index feature must be located within the crosshatched area.
6. “L” is the length of terminal for soldering to a substrate.
7. “N” is the number of terminal positions.
8. Terminal numbers are shown for reference only.
9. The lead width “B”, as measured 0.36mm (0.014 inch) or greater above the seating plane, shall not exceed a maximum value of 0.61mm (0.024 inch)
10. Controlling dimension: MILLIMETER. Converted inch dimensions are not necessarily exact.

M16.3 **(JEDEC MS-013-AA ISSUE C)**
16 LEAD WIDE BODY SMALL OUTLINE PLASTIC PACKAGE

SYMBOL	INCHES		MILLIMETERS		NOTES
	MIN	MAX	MIN	MAX	
A	0.0926	0.1043	2.35	2.65	-
A1	0.0040	0.0118	0.10	0.30	-
B	0.013	0.0200	0.33	0.51	9
C	0.0091	0.0125	0.23	0.32	-
D	0.3977	0.4133	10.10	10.50	3
E	0.2914	0.2992	7.40	7.60	4
e	0.050 BSC		1.27 BSC		-
H	0.394	0.419	10.00	10.65	-
h	0.010	0.029	0.25	0.75	5
L	0.016	0.050	0.40	1.27	6
N	16		16		7
α	0°	8°	0°	8°	-

Rev. 1 6/05

Package Outline Drawing

M24.3

24 LEAD WIDE BODY SMALL OUTLINE PLASTIC PACKAGE (SOIC)

Rev 2, 3/11

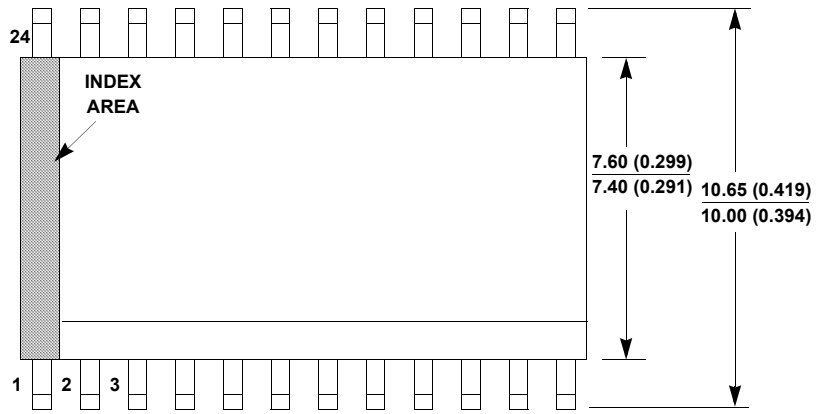

TOP VIEW

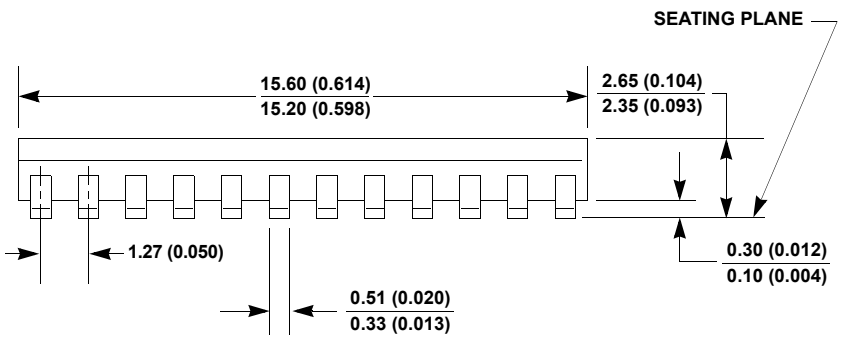

SIDE VIEW "A"

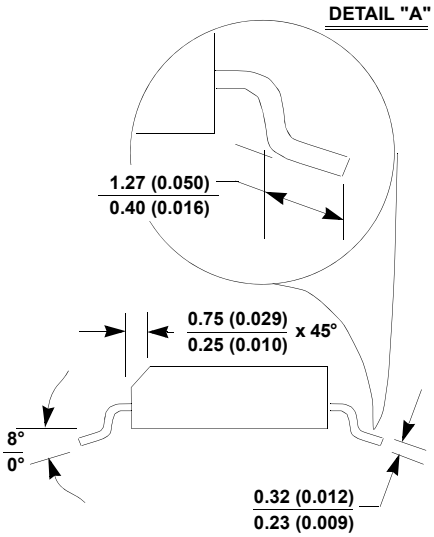

SIDE VIEW "B"

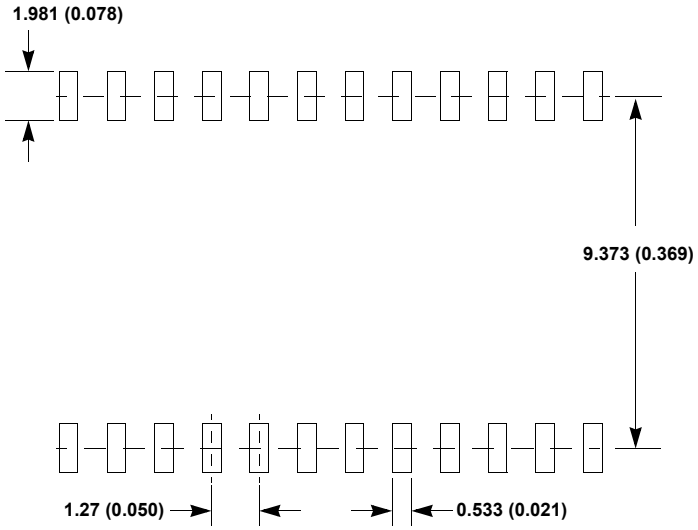

TYPICAL RECOMMENDED LAND PATTERN

NOTES:

1. Dimensioning and tolerancing per ANSI Y14.5M-1982.
2. Package length does not include mold flash, protrusions or gate burrs. Mold flash, protrusion and gate burrs shall not exceed 0.15mm (0.006 inch) per side.
3. Package width does not include interlead flash or protrusions. Interlead flash and protrusions shall not exceed 0.25mm (0.010 inch) per side.
4. The chamfer on the body is optional. If it is not present, a visual index feature must be located within the crosshatched area.
5. Terminal numbers are shown for reference only.
6. The lead width as measured 0.36mm (0.014 inch) or greater above the seating plane, shall not exceed a maximum value of 0.61mm (0.024 inch).
7. Controlling dimension: MILLIMETER. Converted inch dimensions in ( ) are not necessarily exact.
8. This outline conforms to JEDEC publication MS-013-AD ISSUE C.

Shrink Small Outline Plastic Packages (SSOP)

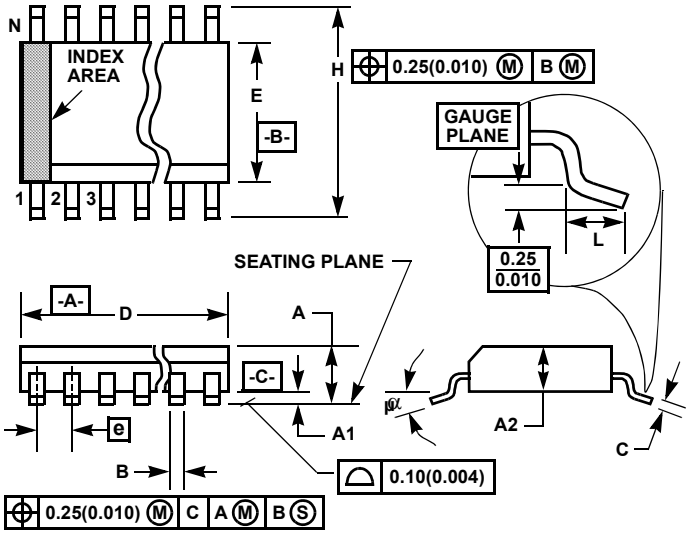

M24.209 **(JEDEC MO-150-AG ISSUE B)**
24 LEAD SHRINK SMALL OUTLINE PLASTIC PACKAGE

SYMBOL	INCHES		MILLIMETERS		NOTES
	MIN	MAX	MIN	MAX	
A	-	0.078	-	2.00	-
A1	0.002	-	0.05	-	-
A2	0.065	0.072	1.65	1.85	-
B	0.009	0.014	0.22	0.38	9
C	0.004	0.009	0.09	0.25	-
D	0.312	0.334	7.90	8.50	3
E	0.197	0.220	5.00	5.60	4
e	0.026 BSC		0.65 BSC		-
H	0.292	0.322	7.40	8.20	-
L	0.022	0.037	0.55	0.95	6
N	24		24		7
α	0°	8°	0°	8°	-

Rev. 1 3/95

NOTES:

1. Symbols are defined in the “MO Series Symbol List” in Section 2.2 of Publication Number 95.
2. Dimensioning and tolerancing per ANSI Y14.5M-1982.
3. Dimension “D” does not include mold flash, protrusions or gate burrs. Mold flash, protrusion and gate burrs shall not exceed 0.20mm (0.0078 inch) per side.
4. Dimension “E” does not include interlead flash or protrusions. Interlead flash and protrusions shall not exceed 0.20mm (0.0078 inch) per side.
5. The chamfer on the body is optional. If it is not present, a visual index feature must be located within the crosshatched area.
6. “L” is the length of terminal for soldering to a substrate.
7. “N” is the number of terminal positions.
8. Terminal numbers are shown for reference only.
9. Dimension “B” does not include dambar protrusion. Allowable dambar protrusion shall be 0.13mm (0.005 inch) total in excess of “B” dimension at maximum material condition.
10. Controlling dimension: MILLIMETER. Converted inch dimensions are not necessarily exact.

Small Outline Plastic Packages (SOIC)

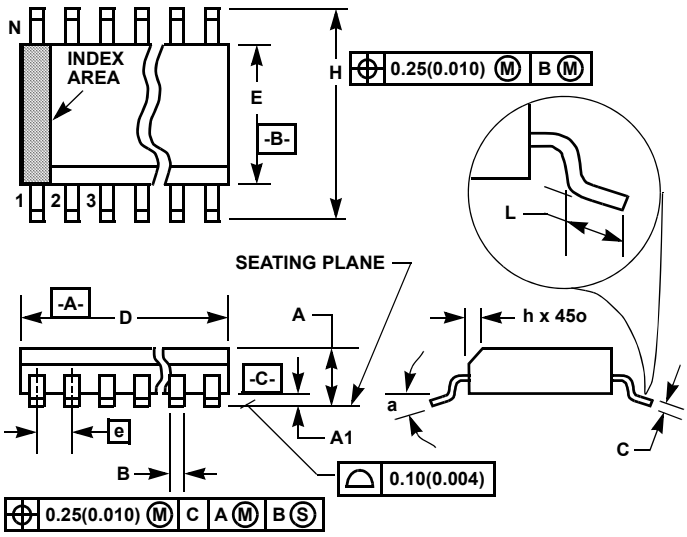

M28.3 (JEDEC MS-013-AE ISSUE C)
28 LEAD WIDE BODY SMALL OUTLINE PLASTIC PACKAGE

SYMBOL	INCHES		MILLIMETERS		NOTES
	MIN	MAX	MIN	MAX	
A	0.0926	0.1043	2.35	2.65	-
A1	0.0040	0.0118	0.10	0.30	-
B	0.013	0.0200	0.33	0.51	9
C	0.0091	0.0125	0.23	0.32	-
D	0.6969	0.7125	17.70	18.10	3
E	0.2914	0.2992	7.40	7.60	4
e	0.05 BSC		1.27 BSC		-
H	0.394	0.419	10.00	10.65	-
h	0.01	0.029	0.25	0.75	5
L	0.016	0.050	0.40	1.27	6
N	28		28		7
α	0°	8°	0°	8°	-

Rev. 1, 1/13

TYPICAL RECOMMENDED LAND PATTERN

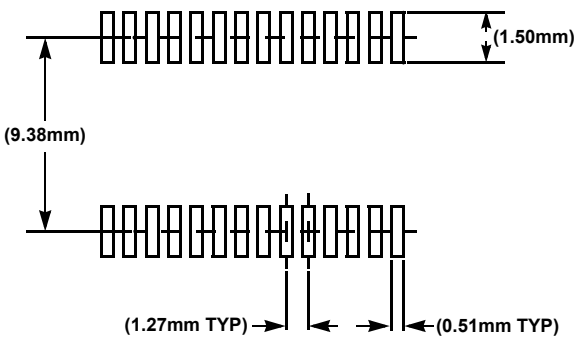

NOTES:

1. Symbols are defined in the “MO Series Symbol List” in Section 2.2 of Publication Number 95.
2. Dimensioning and tolerancing per ANSI Y14.5M-1982.
3. Dimension “D” does not include mold flash, protrusions or gate burrs. Mold flash, protrusion and gate burrs shall not exceed 0.15mm (0.006 inch) per side.
4. Dimension “E” does not include interlead flash or protrusions. Interlead flash and protrusions shall not exceed 0.25mm (0.010 inch) per side.
5. The chamfer on the body is optional. If it is not present, a visual index feature must be located within the crosshatched area.
6. “L” is the length of terminal for soldering to a substrate.
7. “N” is the number of terminal positions.
8. Terminal numbers are shown for reference only.
9. The lead width “B”, as measured 0.36mm (0.014 inch) or greater above the seating plane, shall not exceed a maximum value of 0.61mm (0.024 inch)
10. Controlling dimension: MILLIMETER. Converted inch dimensions are not necessarily exact.

Shrink Small Outline Plastic Packages (SSOP)

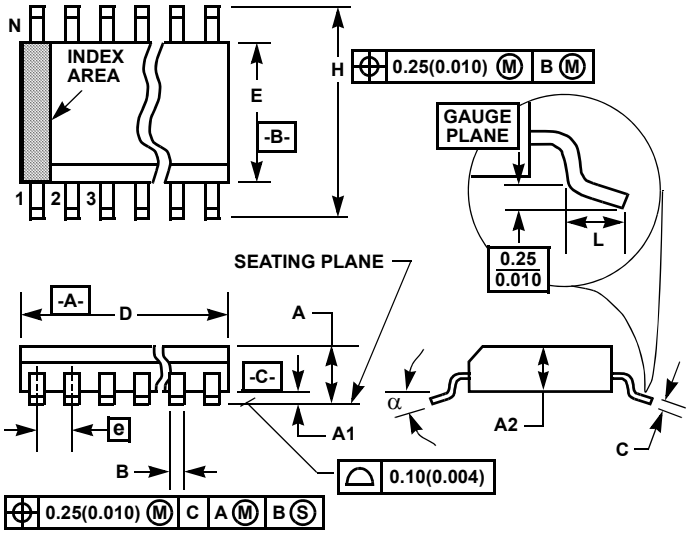

M28.209 **(JEDEC MO-150-AH ISSUE B)**
28 LEAD SHRINK SMALL OUTLINE PLASTIC PACKAGE

SYMBOL	INCHES		MILLIMETERS		NOTES
	MIN	MAX	MIN	MAX	
A	-	0.078	-	2.00	-
A1	0.002	-	0.05	-	-
A2	0.065	0.072	1.65	1.85	-
B	0.009	0.014	0.22	0.38	9
C	0.004	0.009	0.09	0.25	-
D	0.390	0.413	9.90	10.50	3
E	0.197	0.220	5.00	5.60	4
e	0.026 BSC		0.65 BSC		-
H	0.292	0.322	7.40	8.20	-
L	0.022	0.037	0.55	0.95	6
N	28		28		7
α	0°	8°	0°	8°	-

Rev. 2 6/05

NOTES:

1. Symbols are defined in the “MO Series Symbol List” in Section 2.2 of Publication Number 95.
2. Dimensioning and tolerancing per ANSI Y14.5M-1982.
3. Dimension “D” does not include mold flash, protrusions or gate burrs. Mold flash, protrusion and gate burrs shall not exceed 0.20mm (0.0078 inch) per side.
4. Dimension “E” does not include interlead flash or protrusions. Interlead flash and protrusions shall not exceed 0.20mm (0.0078 inch) per side.
5. The chamfer on the body is optional. If it is not present, a visual index feature must be located within the crosshatched area.
6. “L” is the length of terminal for soldering to a substrate.
7. “N” is the number of terminal positions.
8. Terminal numbers are shown for reference only.
9. Dimension “B” does not include dambar protrusion. Allowable dambar protrusion shall be 0.13mm (0.005 inch) total in excess of “B” dimension at maximum material condition.
10. Controlling dimension: MILLIMETER. Converted inch dimensions are not necessarily exact.

© Copyright Intersil Americas LLC 2001-2015. All Rights Reserved.
All trademarks and registered trademarks are the property of their respective owners.

For additional products, see www.intersil.com/en/products.html

Intersil products are manufactured, assembled and tested utilizing ISO9001 quality systems as noted in the quality certifications found at www.intersil.com/en/support/qualandreliability.html

Intersil products are sold by description only. Intersil may modify the circuit design and/or specifications of products at any time without notice, provided that such modification does not, in Intersil's sole judgment, affect the form, fit or function of the product. Accordingly, the reader is cautioned to verify that datasheets are current before placing orders. Information furnished by Intersil is believed to be accurate and reliable. However, no responsibility is assumed by Intersil or its subsidiaries for its use; nor for any infringements of patents or other rights of third parties which may result from its use. No license is granted by implication or otherwise under any patent or patent rights of Intersil or its subsidiaries.

For information regarding Intersil Corporation and its products, see www.intersil.com