Part Number	Length (Meters)
CA0911B800801012	1 (3.28 FEET)
CA0911B800802012	2 (6.56 FEET)
CA0911B800803012	3 (9.84 FEET)
CA0911B800805012	5 (16.40 FEET)
CA0911B800807012	7 (22.96 FEET)
CA0911B800810012	10 (32.80 FEET)
CA0911B800813012	13 (42.65 FEET)
CA0911B800815012	15 (49.21 FEET)

REVISIONS							
REV	ZONE	ECO	DESCRIPTION	DATE	BY	CHK	APPR
A1	-	-	TECHNICAL DATA SHEET RELEASE	20-JULY-17	RO	-	–

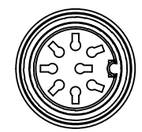

FEMALE CONNECTOR PLUG

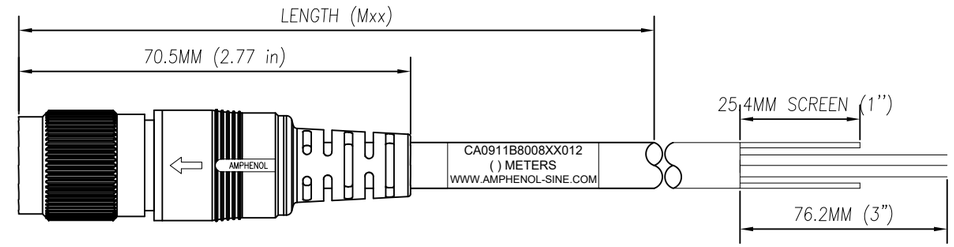

WIRING DIAGRAM

CAN BE USED WITH MATING MALE RECEPTACLE # CA0911G118005

CONTACT YOUR DISTRIBUTOR FOR OTHER MATING OPTIONS

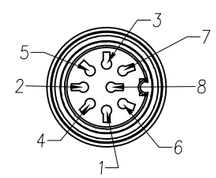

FACE VIEW

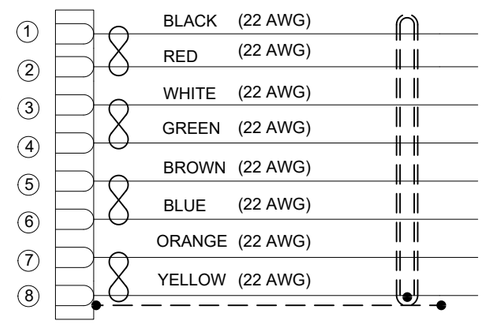

TECHNICAL DATA:

1) MATERIALS:
- COUPLING NUT: ZINC DIE CAST
- INSULATION INSERT: THERMOPLASTIC
- CONTACT: SILVER PLATED
- OVERMOLD MATERIAL: THERMOPLASTIC COLOR: BLACK
- CABLE RATING: UL LISTED, UL RECOGNIZED AWM STYLE AND CSA CERTIFIED, AWM 2517 105°C 300V
- CABLE JACKET MATERIAL: PVC COLOR: BLACK
- BENDING RADIUS: 0.260"
- CONDUCTOR INSULATION: SR-PVC
- NUMBER OF CONDUCTORS: (8) 22AWG

2) CONNECTOR ELECTRICAL DATA:
- CURRENT (MAX): 7A AT 40°C
- VOLTAGE (MAX): 250V AC/DC PER UL 1977
- INSULATION RESISTANCE: 100M OHMS PER IEC 60512-3-1
- RATED IMPULSE WITHSTAND VOLTAGE: 1200V PER IEC 60664-1

3) CONNECTOR MECHANICAL DATA:
- TEMPERATURE RANGE: -25°C TO +100°C
- PROTECTION: IP68 (MATED CONDITION)
- MATING CYCLES: >500

4) RoHS COMPLIANT

TOLERANCE	
0-2.99 M = +100.0/-25.0mm	0-9.99 FT = +4" / -1"
3-8.99 M = +150.0/-25.0mm	10.00-29.99 FT = +6" / -1"
9-14.99 M = +300.0/-25.0mm	30.00-49.99 FT = +12" / -1"
15-OVER M = +450.0/-25.0mm	50 FT-OVER = +18" / -1"

INDUSTRIAL@AMPHENOL TRUSTED GLOBALLY

QUANTITY	PART NUMBER	DESCRIPTION	ITEM
	MATERIALS LIST		

UNLESS OTHERWISE SPECIFIED
1) All dimensions are in metric(mm).
2) Tolerances are as follows:
1 PL DEC ±0.30
2 PL DEC ±0.15
3 PL DEC ±0.08
Fractions ±1/64
Angles ±1°
3) Note reference = A

SIGNATURES		DATE
DRAWN:	RO	6-JUNE-17
CHECKED:	AA	8-JUNE-17
ENGINEER:	RO	
APPROVAL:	WS	13-JUNE-17

MATERIAL SPECIFICATIONS:

PROCESS SPECIFICATIONS: IPC-WHMA-A-620

NEXT ASS'Y:

CUSTOMER:

THIS DRAWING IS SUPPLIED FOR INFORMATION ONLY. DESIGN FEATURES, SPECIFICATIONS AND PERFORMANCE DATA SHOWN HEREON ARE THE PROPERTY OF THE AMPHENOL CORPORATION. NO RIGHTS OF REPRODUCTION ARE IMPLIED. ALL DIMENSIONS ARE SUBJECT TO NORMAL MANUFACTURING VARIATIONS.

Amphenol
Sine Systems - www.amphenol-sine.com
44724 Morley Drive
Clinton Township, MI 48036

C091 (M16) 8 POS CIRCULAR MOLDED, STD. STRAIN RELIEF, FEMALE TO LEADS, 22AWG

SIZE	TYPE	DWG NO:	REVISION
	C-	CA0911B8008XX012	A1

SCALE: HALF | CA0911B8008XX012 | SHEET 1 OF 1