THIS DRAWING IS UNPUBLISHED. RELEASED FOR PUBLICATION JULY ,2006.
© COPYRIGHT 2006 By – ALL RIGHTS RESERVED.

REVISIONS

P	LTR	DESCRIPTION	DATE	DWN	APVD
	B2	ECO-18-017221	31OCT2018	RZ	RS

NOTES

1. SINGLE PACK IN ACCORDANCE WITH AMP SPEC 107-3275
2. 100 TRAY PACK IN ACCORDANCE WITH AMP SPEC 107-3275
3. Au PLATING

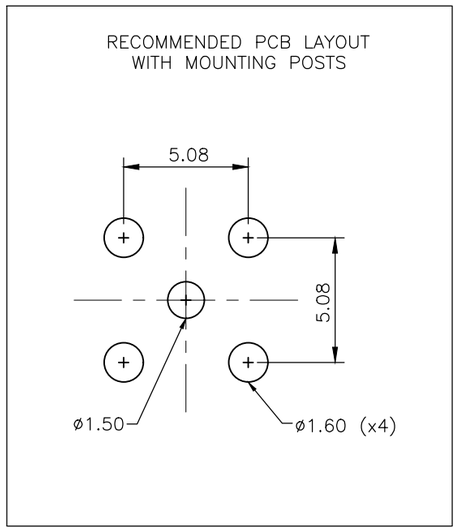

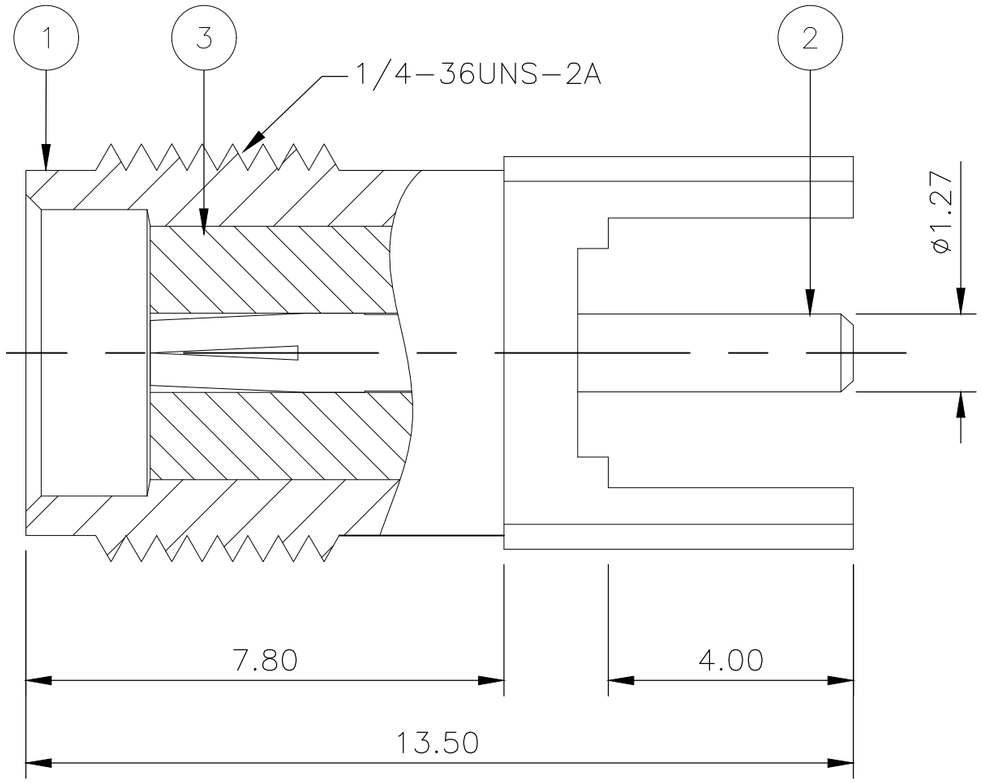

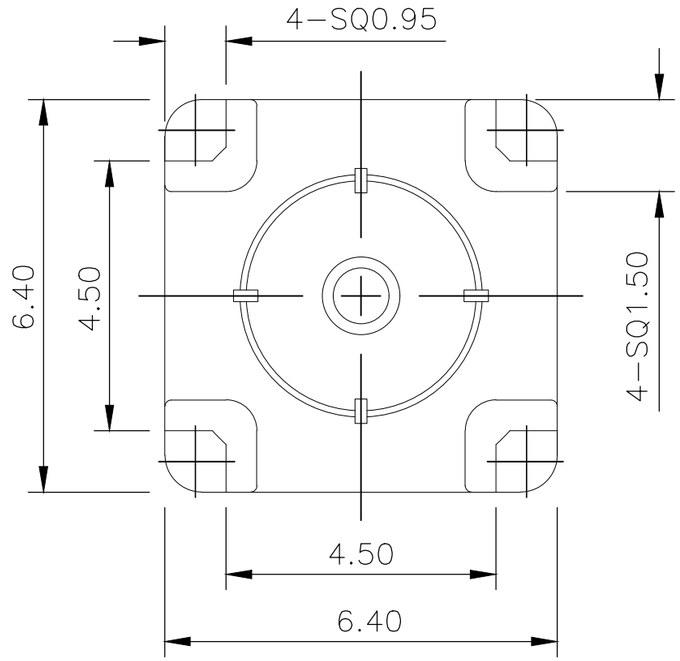

ELECTRICAL	MECHANICAL	ENVIRONMENTAL
Impedance (Ohm): 50	Interface Dimension MIL-STD-348B Fig. 310-2	TEMPERATURE RANGE: -65°C TO + 165°C
Frequency Range (GHz): DC to 6GHz	Recommended Coupling Torque: 7 to 10 In-Lbs	THERMAL SHOCK: MIL-STD-202, METH.107, COND.B
Voltage Rating (Peak): @ Sea Level 335 V RMS	Force to Engage and Disengage (In/lbs): 2.0 MAX	CORROSION: MIL-STD-202, METH.101, COND.B
Insulation Resistance (MIN.): 1000 M ohms	Center Cantact Captivation: Axial (Lbs) 3.0; Radial (In/Oz) N/A	VIBRATION: MIL-STD-202, METH.204, COND.B
Contact Resistance (Milliohms MAX): Center Contact 3.0; Outer Contact 2.0	Cable Retention: Axial (Lbs) N/A	SHOCK: MIL-STD-202, METH.213, COND.I
Dielectric Withstand Voltage: 1000 V RMS Max	Mating cycles: 500 cycles	MOISTURE RESISTANCE: MIL-STD-202, METH.106,
Insertion Loss : N/A dB		ROHS: COMPLIANT
VSWR: 1.3 MAX		
RF leakage: N/A		
3rd Intermodulation: N/A		

						1	1	PTFE	INSULATOR	3
						1	1	BERYLLIUM COPPER △3	SOCKET	2
						1	1	ZINC ALLOY △3	BODY	1
						5--15	5--0	MATERIAL	DESCRIPTION	ITEM
						△1	△2			
QUANTITY PER ASSY								PARTS LIST		

THIS DRAWING IS A CONTROLLED DOCUMENT.

DIMENSIONS: mm

TOLERANCES UNLESS OTHERWISE SPECIFIED:

0 PLC	± –
1 PLC	± –
2 PLC	± 0.1
3 PLC	± –
4 PLC	± –
ANGLES	± –

MATERIAL: SEE TABLE

FINISH: –

DWN ANSON MA 19FEB09
CHK RITA ZUO 19FEB09
APVD BOB ZHAO 19FEB09
PRODUCT SPEC 108-112000
APPLICATION SPEC –
WEIGHT 0.000000

TE Connectivity

NAME: SMA STRAIGHT PCB SOCKET DIE CAST – –

SIZE	CAGE CODE	DRAWING NO	RESTRICTED TO
A3	00779	C-1814832	–

CUSTOMER DRAWING | SCALE NTS | SHEET 1 OF 1 | REV B2

1470-19 (1/15)