This document was generated on 01/15/2015

PLEASE CHECK WWW.MOLEX.COM FOR LATEST PART INFORMATION

Part Number: 104004-0505

Status: Active

Overview: HSAutoLink™ Interconnect System

Description: 0.80mm Pitch USCAR Mini B Vertical Header, 5 Circuit, Type B

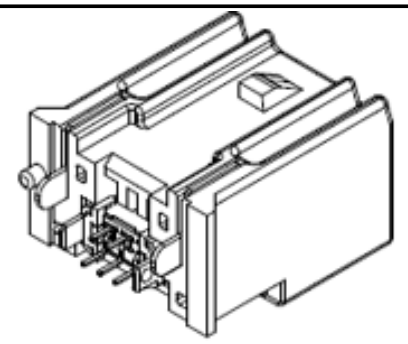

Series

image - Reference only

Documents:

Drawing (PDF)
Product Specification PS-49616-001 (PDF)
Packaging Specification PK-104004-001 (PDF)
RoHS Certificate of Compliance (PDF)

General

Product Family	PCB Headers
Series	104004
Application	Signal, Wire-to-Board
Overview	HSAutoLink™ Interconnect System
Product Name	HSAutoLink™
UPC	883906581329

Physical

Breakaway	No
Circuits (Loaded)	5
Circuits (maximum)	5
Color - Resin	Gray
Durability (mating cycles max)	25
First Mate / Last Break	No
Glow-Wire Compliant	No
Guide to Mating Part	No
Keying to Mating Part	None
Lock to Mating Part	Yes
Material - Metal	Copper Alloy
Material - Plating Mating	Gold
Material - Plating Termination	Tin
Material - Resin	High Temperature Thermoplastic
Net Weight	3.458/g
Number of Rows	1
Orientation	Vertical
PCB Locator	Yes
PCB Retention	Yes
PCB Thickness - Recommended	1.60mm
Packaging Type	Tray
Pitch - Mating Interface	0.80mm
Pitch - Termination Interface	0.80mm
Polarized to Mating Part	Yes
Polarized to PCB	Yes
Shrouded	No
Stackable	No
Temperature Range - Operating	-40°C to +85°C
Termination Interface: Style	Through Hole

Electrical

Current - Maximum per Contact	1.5A
Voltage - Maximum	5V (RMS)

Material Info

Reference - Drawing Numbers

Packaging Specification	PK-104004-001
Product Specification	PS-49616-001

EU RoHS
ELV and RoHS Compliant
REACH SVHC
Not Reviewed
Low-Halogen Status
Low-Halogen

China RoHS

Need more information on product environmental compliance?

Email productcompliance@molex.com
For a multiple part number RoHS Certificate of Compliance, click here

Please visit the Contact Us section for any non-product compliance questions.

Search Parts in this Series
104004Series

Mates With
HS AutoLink™ Cable Assembly 111014 , 111015 , 111005 , 111041 , 111019 , 111020

This document was generated on 01/15/2015

PLEASE CHECK WWW.MOLEX.COM FOR LATEST PART INFORMATION