Light Shield Incandescent Indicators

T-1 3/4 MIDGET FLANGE BASE

See lamp ratings on page J.

ONE TERMINAL – FULLY INSULATED for use on grounded circuits.

FOR FRONT MOUNTING IN 15/32" CLEARANCE HOLE

MEET OR EXCEED ENVIRONMENTAL AND OPERATIONAL REQUIREMENTS OF MIL–L–7806 AND MIL–L–3661

An opening in the side of the metal lamp holder emits light on the panel to illuminate dials or controls. The usual opening is 1/4" X 5/32". The 113 series has a molded colored filter to provide a colored light†.

How to designate the Three Digit Part Number Suffix (–XXX) (4 Series only)

Finish	Resistor	Hardware
1–white nickel 2–black nickel 3–polished chrome	0–none	1 – brass 3 – water tight on face of panel (113 Series only) 7 – insulated mounting*

Example: 4-1930-2900-101 (white nickel finish, no resistor, brass hardware).

† For 2 terminal requirements, assembly is supplied with 2 insulating washers and a lug. Mounting hole becomes 9/16".

MATERIALS AND FINISHES

- **Mounting Bushing:** Standard– Brass, black nickel finish. Optional, (4 series only)– Polished chrome or white nickel finish.
- **Mounting Nut:** Brass, white nickel finish.
- **Internal-tooth Lockwasher:** Phosphor bronze, white nickel finish.
- **Terminals:** **Soldering**– Brass, hot tin dip. **Screw**– Brass, cadmium plated with yellow iridescent chromate finish.
- **Insulation:** Per MIL–L–7806.

4 SERIES
113 SERIES

4-1930-2900-201 (without filter)

113-1830-2931-201 (with molded filter)

	solder terminal	screw terminal
	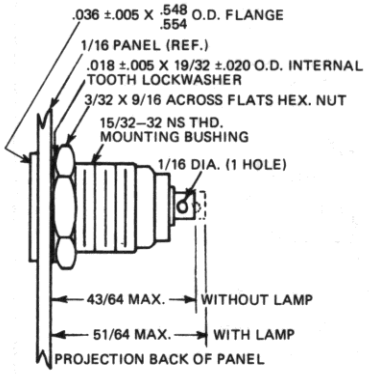	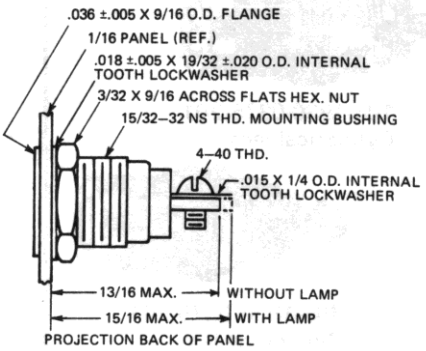
BASE PART NUMBERS	4-1930-29-201	4-1830-29-201

CAP PART NUMBERS	COMPLETE ASSEMBLY PART NUMBERS	
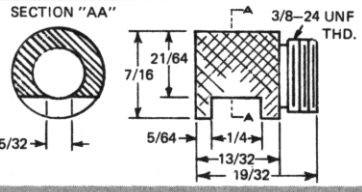 4-2900-200 (without filter)	4-1930-2900-201	4-1830-2900-201
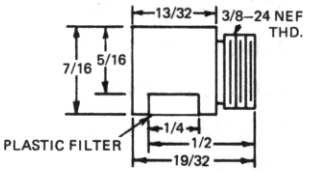 113-2931-200 (with molded filter)	113-1930-2931-201	113-1830-2931-201

***Filter colors:** The digit before the three digit part number suffix indicates that the filter is RED. When a color other than red is desired, change this digit as follows:
Red–1; Green–2; Yellow (amber)–3; Blue–4; Clear (colorless)–7.
Example: 113-1930-2934-201 (Blue).

Part numbers shown in gray are normally in inventory at your Dialight Distributor.