UTS SERIES

# SOURIAU

## Waterproof Plastic Connectors

IP68 and IP69K

Esterline
Connection Technologies

## Contents

### Overview


Typical Applications ..... 06
Features & Benefits ..... 07
Range Overview ..... 08
Layouts ..... 10
General Technical Characteristics ..... 12


### Connector


Overmoulded Cable Assembly ..... 16
2 contacts ..... 20
2 + ground contacts ..... 28
3 contacts ..... 36
3 + ground contacts ..... 52
4 contacts ..... 60
5 contacts ..... 72
6 contacts ..... 80
6 + ground contacts ..... 92
7 contacts ..... 96
8 contacts ..... 100
10 contacts ..... 112
12 contacts ..... 116
14 contacts ..... 128
15 contacts ..... 132
18 contacts ..... 136
19 contacts ..... 140
23 contacts ..... 144
32 contacts ..... 148
LC (Fiber Optic) ..... 152
MPO (Fiber Optic) ..... 156


### Contacts


Description ..... 162
Contact Plating Selector Guide ..... 163
Contact Selector Guide ..... 164
Packaging ..... 164
Crimp Contacts ..... 165
#16 Coaxial Contacts ..... 167
PCB Contacts ..... 168
Fiber Optic Contacts ..... 170


### Technical Information


Tooling ..... 174
Crimping Instructions ..... 176
Handle & Interchangeable Heads ..... 178
Extraction Tools ..... 179
Overmoulded Cable Assembly Dimensions ..... 179
Assembly Instructions ..... 180
Mated Connector Lengths ..... 184
Mating Procedure ..... 185
Rated Current & Working Voltage ..... 186
UV Resistance ..... 187
UL94 + UL1977 ..... 188
IEC 61984 & IP Codes Explained ..... 191
IEC 61140 Explained ..... 193
What is NEMA Rating ? ..... 194
Ethernet for the Layman ..... 195


### Appendices


#16 Coaxial Contacts/Cabling Notices ..... 200
Glossary of Terms ..... 201
Discrimination/Keying Methods ..... 208
Part Number Index ..... 209

UTS SERIES

© 2014 SOURIAU - SOURIAU is a registered trademark

UTS Series

# Overview


Typical Applications ..... 06

Features & Benefits ..... 07

Range Overview ..... 08

Layouts ..... 10

General Technical Characteristics ..... 12

## Typical Applications

Energy - Power

Off-Road

Building Automation & Control

Instrumentation - Measurement

Rail

Stage - Light

## Features & Benefits

**WATER PROOF**

### IP68/69K Dynamic Mated & Unmated

Ideal for outdoor and indoor dynamic applications requiring continuous underwater immersion, routine pressure washing and dust protection.

**UV RESISTANT**

### No Degradation Over Time

No mechanical deterioration or important variation in colour after 5 years of exposure in natural environment (equivalent exposure to sun and moisture as per ISO4892) and F1 rated per UL 746C.

**UL/IEC COMPLIANT**

### Qualified & Certified

In accordance with:
- UL 1977 - Certificate ECBT2, File number: E169916
- CSA C22.2 n°182.3 - Certificat ECBT8, File number: E169916.

**QUICK MATING**

### 1/3 Bayonet Coupling

With only 1/3 twist of the bayonet coupling system, connectors are mated with audible "click" and tactile feel to confirm proper mating. This mating feature eliminates connection uncertainty and reduces time and labor during installation.

**COST SAVINGS**

### Mixed Power & Signal Contacts

Power supply and signal transmission can be combined in a unique interconnect solution to reduce system complexity and minimize component installation cost.

## Range

### UTS Series

Cable Sealed

Single Wire Sealed

### UTS Standard

Sealed: IP68/69K dynamic
UV resistant
UL/IEC compliant

Corrosion-proof
Plastic housing

### UTS Backshells

**Cable Sealing**

**Double Sealing (Wires + Cable)**

**Grommet**

**Single Wire Sealed**

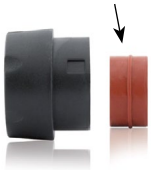

**Flexible conduit adaptators**

Contact us for more information

### Contacts Supplied Separately

**Choice of Crimp Contacts**
- Machined
- Stamped and Formed
- Coaxial

**PCB Contacts**

**Fiber Optic**

### Contacts Loaded Screw Termination

### Contacts Loaded Handsolder

### Plug

### UTS Sealed Unmated

Sealed Unmated: IP68/69K dynamic
MIL-C-26482 compatible
UV resistant
UL/IEC compliant

Corrosion-proof
Plastic housing

### Overmoulded Cable Assembly

## Overview

### UTS Standard Receptacle

Square Flange

Threaded Receptacle

**Contacts Supplied Separately**

**Choice of Crimp Contacts**
- Machined
- Stamped and Formed
- Coaxial

**PCB Contacts**

**Fiber Optic**

In-line

Jam Nut

**Contacts Supplied Separately**

**Choice of Crimp Contacts**
- Machined
- Stamped and Formed
- Coaxial

**PCB Contacts**

**Fiber Optic**

**Contacts Loaded**

**Screw Termination**

**PCB**

### UTS Backshells

**Cable Sealing**

**Double Sealing (Wires + Cable)**

**Grommet**

**Single Wire Sealed**

**Flexible conduit adaptators**

Contact us for more information

### UTS Sealed Unmated Receptacle

Jam Nut

Square Flange

**Contacts Loaded**

**Handsolder**

**PCB**

### UTS PCB Contacts

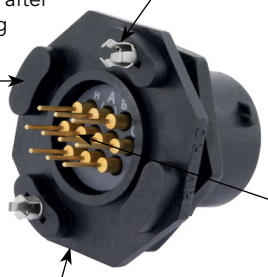

Stand-offs to allow cleaning after soldering

Metal hold down clips
- to lock the connector easily on the PCB and to release stress on solder joints
- suitable for soldering in a metallic hole

Pre-assembled PCB contacts
- machined or stamped versions available
- different solder tails lengths possible
- different plating options

Low profile housing to limit space between panel and PCB

## Layouts (Electrical parameter according to IEC)

| Shell Size | Contact #16 (Ø 1.6mm) | Contact #20 (Ø 1.0mm) | Contact #8 (Ø 3.6mm) | Hybrid & others |
|---|---|---|---|---|
| 8 | | **8E2/8D2**[1]<br>7A 32V<br>2 contacts<br> <br>Page 20<br><br>**8E3/8D3**[1]<br>7A 32V<br>3 contacts<br> <br>Page 36<br><br>**8E3A/8D3A**[1]<br>7A 50V<br>3 contacts<br> <br>Page 40<br><br>**8E98/8D98**[1]<br>7A 50V<br>3 contacts<br> <br>Page 40<br><br>**8E33/8D33**[1]<br>7A 50V<br>3 contacts<br> <br>Page 44<br><br>**8E4/8D4**[1]*<br>7A 32V<br>4 contacts<br> <br>Page 60 | | |
| 10 | **103**<br>16A 300V<br>2+ground<br> <br>Page 28<br><br>**104**[3]<br>13A 150V<br>4 contacts<br> 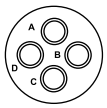 <br>Page 68 | **106***<br>**10E6**[1]**/10D6**<br>7A 32V<br>6 contacts<br> 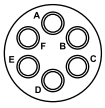 <br>Page 84<br><br>**10E98/10D98**<br>7A 50V<br>6 contacts<br> 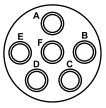 <br>Page 88<br><br>**10E7**[1]**/10D7**<br>7A 50V<br>7 contacts<br> 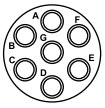 <br>Page 96 | | **102W2**<br>25A 150V<br>4 contacts<br>2xØ2.4 (#12)<br>2xØ1.0 (#20)<br> 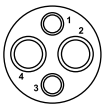 <br>Page 64<br><br>**103W3**<br>5A 32V<br>6 contacts<br>3xØ1.6 (#16)<br>3xØ1.0 (#20)<br> 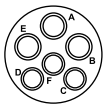 <br>Page 80 |
| 12 | **12E2/12D2**<br>16A 150V<br>2 contacts<br> 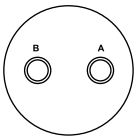 <br>Page 24<br><br>**12E3/12D3**<br>16A 150V<br>3 contacts<br> 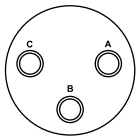 <br>Page 48<br><br>**124**<br>**12E4/12D4**<br>16A 300V<br>3+ground<br> 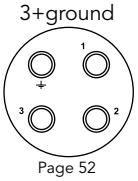 <br>Page 52<br><br>**128**[1] [3]<br>10A 80V<br>8 contacts<br> 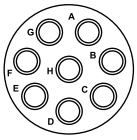 <br>Page 100 | **1210***<br>**12E10/12D10**<br>6A 50V<br>10 contacts<br> 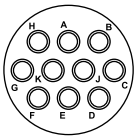 <br>Page 112<br><br>**12E8/12D8**<br>6A 32V<br>8 contacts<br> 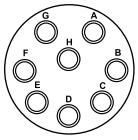 <br>Page 104<br><br>**12E14/12D14**<br>5A 32V<br>14 contacts<br> 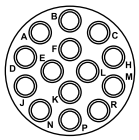 <br>Page 128 | | |

1: M12, M16 and M20 threaded receptacle available 2: NPT available 3: Discrete wire grommet option * Ethernet compatible: see pages 195 & 196

| Shell Size | Contact #16 (Ø 1.6mm)<br>Contacts #20: from AWG 26 to 18, 0.13 to 0.93 mm² | Contact #20 (Ø 1.0mm)<br>Contacts #16: from AWG 30 to 14, 0.05 to 2.5 mm² | Contact #8 (Ø 3.6mm)<br>Contacts #12: from AWG 22 to 12, 0.13 to 4 mm² | Mixed Power<br>Contacts #8: from AWG 16 to 8, 1.5 to 10 mm² |
|---|---|---|---|---|
| 14 | **14E5/14D5**<br>16A 150V<br>5 contacts<br> 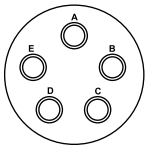 <br>Page 72<br><br>**147**[3]<br>**14E7/14D7**<br>16A 300V<br>6+ground<br> 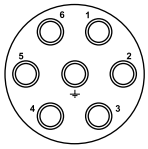 <br>Page 92<br><br>**1412**[3]<br>10A 63V<br>12 contacts<br> 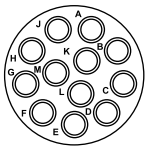 <br>Page 116<br><br>**1492**[3]<br>10A 63V<br>12 contacts<br> 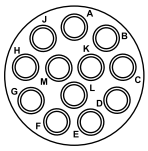 <br>Page 124 | **14E18/14D18**<br>5A 50V<br>18 contacts<br> 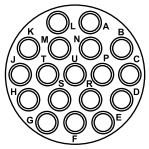 <br>Page 136<br><br>**1419**<br>**14E19/14D19**<br>5A 32V<br>19 contacts<br> 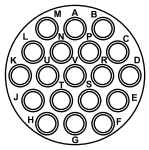 <br>Page 140 | **142G1**[2]<br>40A 300V<br>2+ground<br> 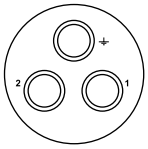 <br>Page 32 | **148**<br>17A 230V<br>8 contacts<br>4xØ1.6 (#16)+4xØ2.4 (#12)<br> 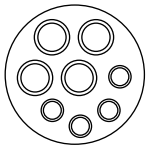 <br>Page 108<br><br>**14E12/14D12**<br>4A 50V<br>12 contacts<br>4xØ1.6 (#16)+8xØ1.0 (#20)<br> 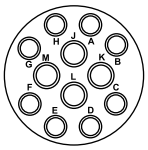 <br>Page 120<br><br>**14E15/14D15**<br>4A 50V<br>15 contacts<br>1xØ1.6 (#16)+14xØ1.0 (#20)<br> 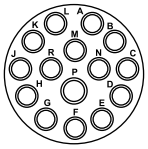 <br>Page 132 |
| 18 | **1823**<br>9A 63V<br>23 contacts<br> 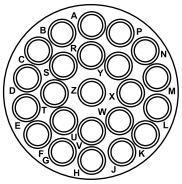 <br>Page 144 | **18E32/18D32**<br>4A 32V<br>32 contacts<br> 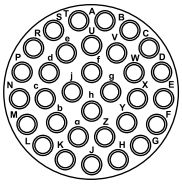 <br>Page 148 | **183G1**[2]<br>32A 300V<br>3+ground<br> 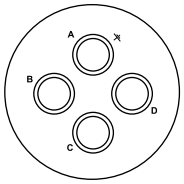 <br>Page 56 | **18X2M3**[2]<br>32A 300V<br>5 contacts<br>3xØ1.6 (#16)+2xØ3.6 (#8)<br> 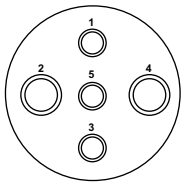 <br>Page 76<br><br>**LC**<br> 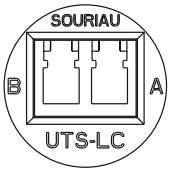 <br><br>Page 152<br><br>**MPO**<br> 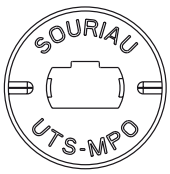 <br><br>Page 156 |

**XXXXXX** blue highlighted items: UTS Sealed in Unmated Condition

# General Technical Characteristics

## Materials

- **Body connector + Backshell:** Thermoplastic
- **Insert:**
  - UTS Standard, UTS Single Wire Sealed, UTS Screw Termination Contacts: Thermoplastic
  - UTS Sealed Unmated Handsolder & UTS Sealed Unmated with PC Tails Contacts: Elastomer
- **Nut:** Metal
- **Contacts:** See page 161
- **Halogen free**
- **RoHS compliant & conforms to the Chinese standard SJ/T1166-2006 (Chinese RoHS equivalent)**

## Environmental

- **Operating temperature:**
  from -40°C to +105°C
  40/100/21 per NFF 61-030
- **Flammability rating:**
  - UL94 V-0 (all UTS except the Sealed Unmated version) see page 180
  - UL94 HB (UTS Sealed Unmated version only) see page 180
  - I2F3 according to NFF 16101 & NFF 16102
- **Salt spray:**
  per EIA-026A ≥500 hours
- **UV resistant:**
  No mechanical degradation or important variation of colour after 5 years of exposure in natural environment (equivalence exposure to sun and moisture as per ISO 4892) and F1 rated per UL 746C
- **Sealing:**
  - UTS Standard: IP68/IP69K dynamic (mated)
  - UTS Sealed Unmated version: IP68/IP69K dynamic (unmated)
  - UTS Single Wire Sealed: IP67/69K (up to IP68 with double sealing backshell)
  - UTS Screw Termination Contacts: IP68/IP69K dynamic (mated)

  Note: IP68=10 m underwater during 1 week
- **Fluid resistance:**
  - Gas and Oil
  - Mineral oil
  - Acid bath
  - Basic bath

## Electrical

- **In accordance with:**
  - UL 1977: Certificat ECBT2
    File number: E169916
  - CSA C22.2 n°182.3: Certificat ECBT8
    File number: E169916
- Also see pages 10 & 11

## Mechanical

- **Durability:**
  250 matings & unmatings per MIL-C-26482
- **Vibration resistance (all UTS versions except UTS Screw Termination contacts):**
  Sinusoidal vibrations per IEC 60512-4 - from 10 to 2000 Hz
- **Thermal shock:**
  5 cycles 30 min. from -40°C to 105°C per MIL-STD-1344 method 1003

UTS SERIES

© 2014 SOURIAU - SOURIAU is a registered trademark

# Connector


Overmoulded Cable Assembly ..... 16

2 contacts
- 8E2/8D2: 7A 32V ..... 20
- 12E2/12D2: 16A 150V ..... 24

2 contacts + ground
- 103: 16A 300V ..... 28
- 142G1: 40A 300V ..... 32

3 contacts
- 8E3/8D3: 7A 32V ..... 36
- 8E3A/8E98 - 8D3A/8D98: 7A 50V ..... 40
- 8E33/8D33: 7A 50V ..... 44
- 12E3/12D3: 16A 150V ..... 48

3 contacts + ground
- 124 - 12E4/12D4: 16A 300V ..... 52
- 183G1: 32A 300V ..... 56

4 contacts
- 8E4/8D4*: 7A 32V ..... 60
- 102W2: 25A 150V ..... 64
- 104: 13A 150V ..... 68

5 contacts
- 14E5/14D5: 16A 150V ..... 72
- 18X2M3: 32A 300V ..... 76

6 contacts
- 103W3: 5A 32V ..... 80
- 106* - 10E6/10D6: 7A 32V ..... 84
- 10E98/10D98: 7A 50V ..... 88

6 contacts + ground
- 147 - 14E7/14D7: 16A 300V ..... 92

7 contacts
- 10E7/10D7: 7A 50V ..... 96

8 contacts
- 128: 10A 80V ..... 100
- 12E8/12D8: 6A 32V ..... 104
- 148: 17A 230V ..... 108

10 contacts
- 1210* - 12E10/12D10: 6A 50V ..... 112

12 contacts
- 1412: 10A 63V ..... 116
- 14E12/14D12: 4A 50V ..... 120
- 1492: 10A 63V ..... 124

14 contacts
- 12E14/12D14: 5A 32V ..... 128

15 contacts
- 14E15/14D15: 4A 50V ..... 132

18 contacts
- 14E18/14D18: 5A 50V ..... 136

19 contacts
- 1419 - 14E19/14D19: 5A 32V ..... 140

23 contacts
- 1823: 9A 63V ..... 144

32 contacts
- 1832 - 18E32: 4A 32V ..... 148

LC ..... 152

MPO ..... 156


Electrical parameters according to IEC

* Ethernet compatible see pages 195 & 196

## Overmoulded Cable Assembly

SOURIAU has provided connectors in various applications for more than 90 years and used in the most extreme environments. Conscious about the difficulty to finding a quick and a reliable harness manufacturer, we began in-house cable assembly production. It allows customers to reduce the number of suppliers, and to take advantage of the "best in class" quality of the SOURIAU group. Overmoulding is a process that further enhances the sealing properties of the UTS range, especially over many years of use. Overmoulding provides the opportunity to change the cable exit from straight to 90 degrees and avoid stress on the cable terminated to the connector. Also, as the wires are encapsulated inside the molding, a barrier is created which prevents any liquid from entering the equipment through the connector if the cable jacket is breached.

### How to choose the outer jacket material

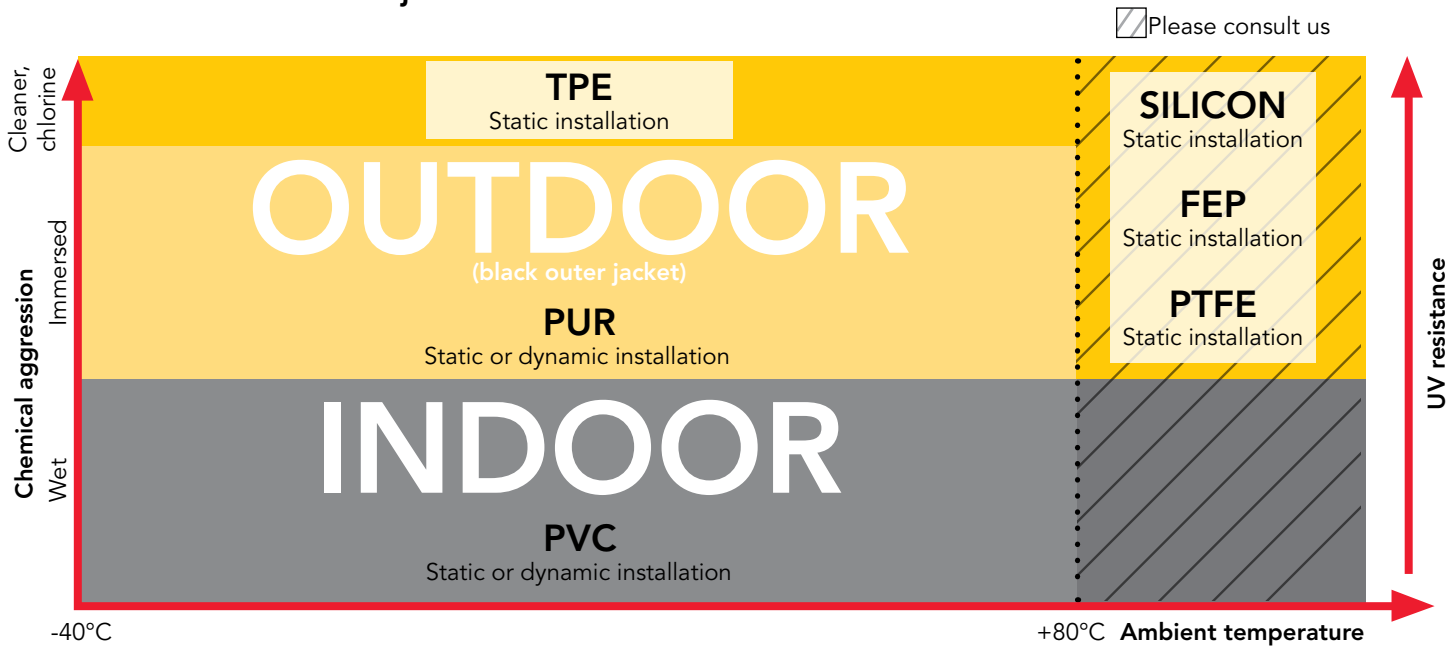

## Overmoulding Description

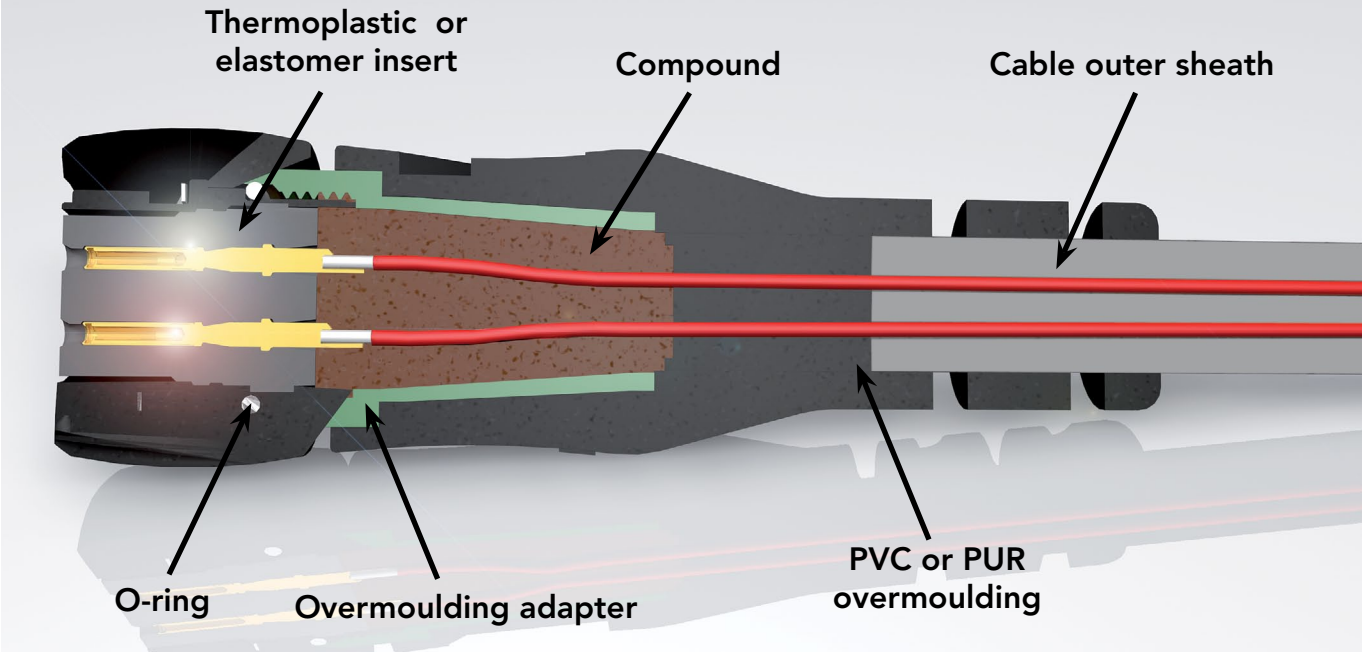


### Connector with cable gland backshell

GOOD

...water ingress unhampered, leading to damage.

### Overmoulded connector

BEST

...prevents water ingress via capillary action.

## UTS Waterproof Plastic Overmould

## HAUTS Standard Offering Description

**Cable**

- PVC outer sheath (grey color)
- Wire section 1.5 mm² for #16 contact
- Wire section 0.5 mm² for #20 contact
- 300V
- Unshielded
- Flammability rating IEC (UL1581 Sec.1160)
- Operating temperature: -40°C +70°C

## Overmoulding Specifications

| PLATING | SALT SPRAY | TEMPERATURE* | WATERPROOF* | MECHANICAL |
|---|---|---|---|---|
| No plating | 500 H | -40°C up to + 105°C | IP68/IP69K dynamic (mated) | 250 matings/unmatings |

* With appropriate cable and overmoulding

## Example of Customized Cable Assemblies

Overmoulding on Curly Cable

Overmoulding with Double Ends

Harness for PCB Connection

To define your customized cable assembly, please consult our technical services.

## Cable Information

**Range of temperature:** Occasional flexing: -5°C up to +70°C
Fixed installation: -40°C up to +80°C

**Rated voltage:** U0/U: 300/500V

**Wire section :** Layouts with #16 contact: wire section 1.5 mm²
Layouts with #20 contact: wire section 0.5 mm²

**Harmonized reference:** H05 VV - F XX

## Standardisation of European Cable - DIN VDE 0281/DIN VDE 0282/DIN VDE 0292

### Harmonized wire coding system

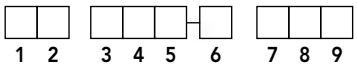


| 1. Basic type | 2. Working voltage | 3. Insulating | 4. Sheath-cladding material | 5. Special features | 6. Conductor types | 7. Number of conductors | 8. Protective conductor | 9. Conductor cross-sectional |
|---|---|---|---|---|---|---|---|---|
| H: Harmonized Type | 03: 300/300V | V: PVC | V: PVC | H: Ribbon cable, separable | U: Single wire | | X: Without protective conductor | Area specified in mm² |
| A: National Type | 05: 300/500V | R: Rubber | R: Rubber | H2: Ribbon cable non-separable | R: Multi-wire | | G: With protective conductor | |
| | 07: 450/750V | S: Silicone Rubber | N: Cloroprene Rubber | | K: Fine wire (permanently installed) | | | |
| | | | J: Glass-filament braiding | | F: Fine wire (flexible) | | | |
| | | | T: Textile braiding | | H: Super fine wire | | | |
| | | | | | Y: Tinsel strand | | | |

Example: Harmonized type, 300/500V, PVC insulating, PVC sheath- cladding, Fine wire, 3x1.5 cross-sectional: H05VVF3x1.5

## 8E2/8D2 (Shell size 8, 2x#20)

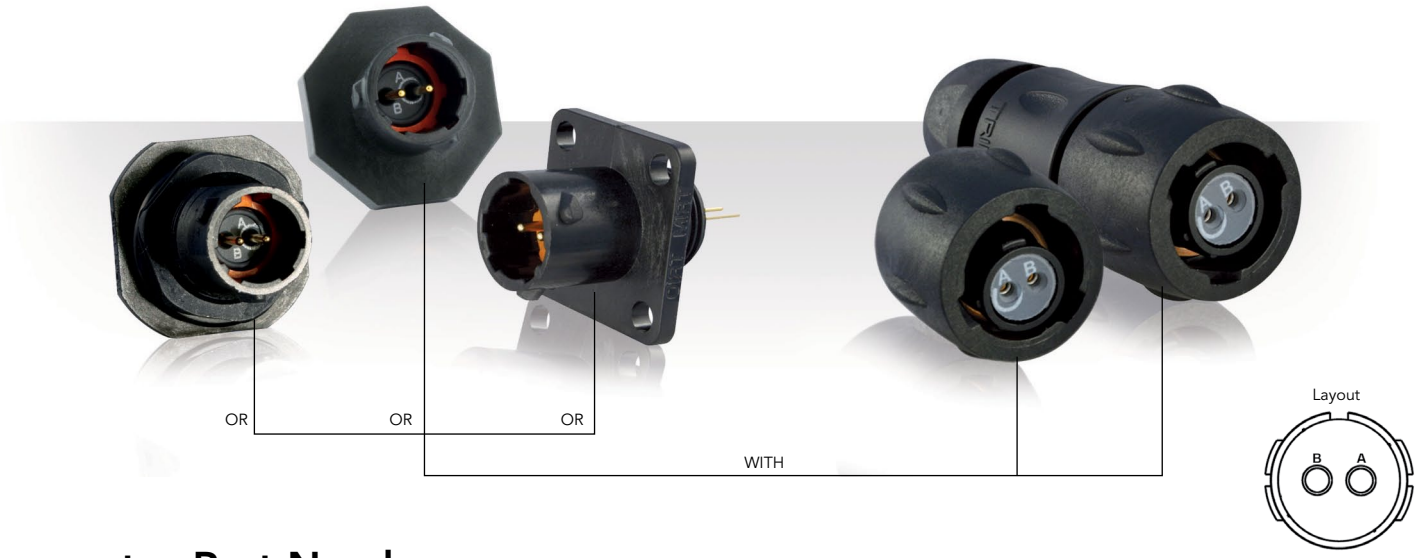


## Connector Part Numbers

| Contact type | Connector type | Backshell | Part number | |
|---|---|---|---|---|
| | | | Male insert | Female insert |
| Handsolder electrical contacts loaded see page 23 | Square flange receptacle | Without (Fig.1) | UTS08E2P | UTS08E2S |
| | Plug | Without (Fig.7) | UTS68E2P | UTS68E2S |
| | | Cable gland (Fig.8) | UTS6JC8E2P | UTS6JC8E2S |
| | Jam nut receptacle | Without (Fig.4) | UTS78E2P | UTS78E2S |
| | M12 threaded receptacle | Without (Fig.3) | UTS78E2PM12 | UTS78E2SM12 |
| PCB contacts loaded see page 23 | Square flange receptacle | Without (Fig.2) | UTS08D2P | UTS08D2S |
| | Jam nut receptacle with stand off and with hold down clips | Without (Fig.6) | UTS78D2P32 | UTS78D2S32 |
| | Jam nut receptacle with stand off and without hold down clip | Without (Fig.5) | UTS78D2P | UTS78D2S |
| | M12 threaded receptacle | Without (Fig.3) | UTS78D2PM12 | UTS78D2SM12 |

Possibilities of discrimination/keying methods see page 208

Sealed unmated

## Overmoulded Cable Assembly Part Numbers

| Overmoulding type | Connector type | Wire size (mm²) | Harmonized cable part number (1) | Part number (length: 1m.)* | |
|---|---|---|---|---|---|
| | | | | Male plug | Female plug |
| Straight ending | Plug | 0.5 | H05 VV - F 2x0.5 | HAUTS0V8E2PST100 | HAUTS0V8E2SST100 |
| Right angle ending | Plug | 0.5 | H05 VV - F 2x0.5 | HAUTS0V8E2PRA100 | HAUTS0V8E2SRA100 |

(1) Other cable available on demand

* Other lengths available on demand

# 8E2/8D2 (Shell size 8, 2x#20)

## Dimensions

### Square Flange Receptacle - UTS0

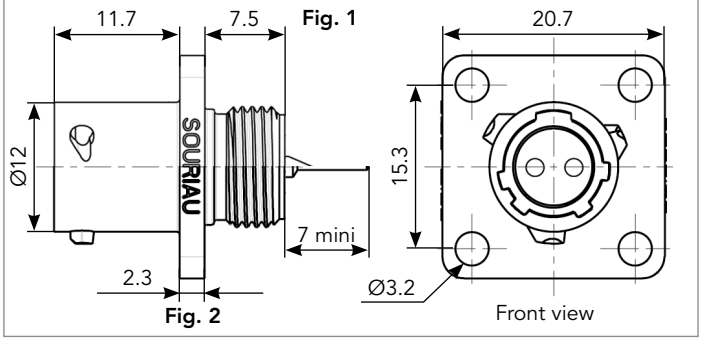


### M12 Threaded Receptacle - UTS7

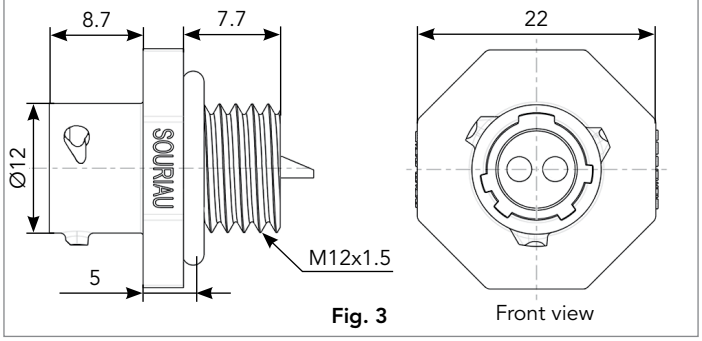


### Jam Nut Receptacle - UTS7

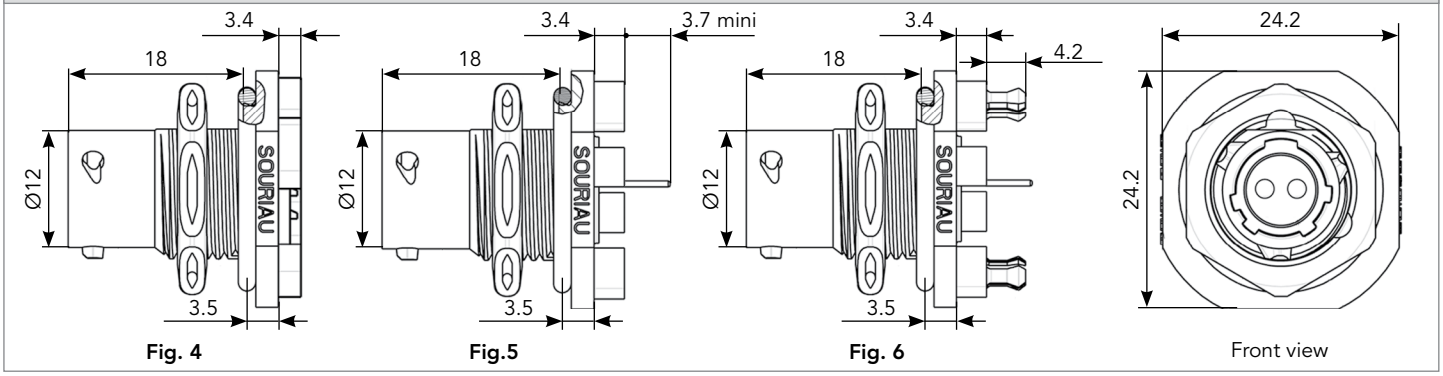


### Plug - UTS6

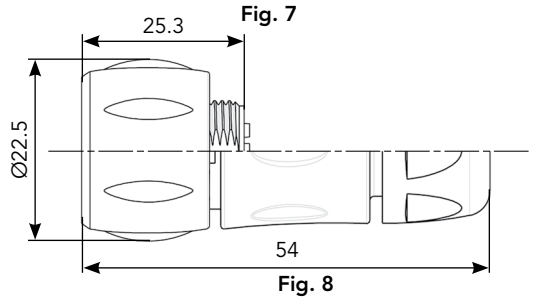


### Mated Connector Lengths

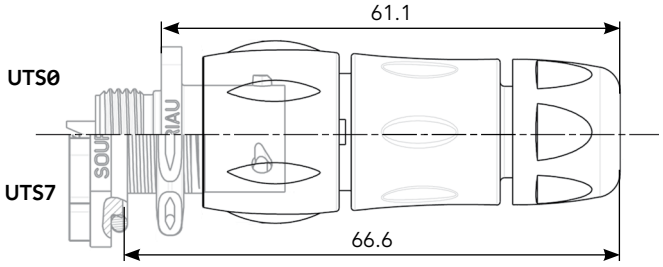


### Panel Cut Out

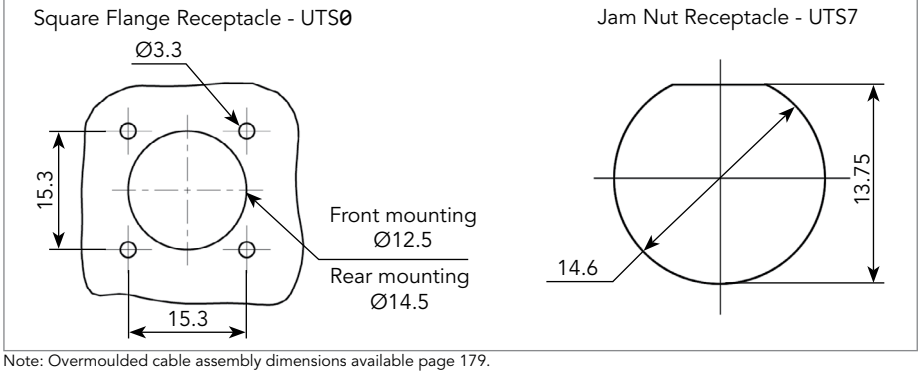


### Drilling Pattern

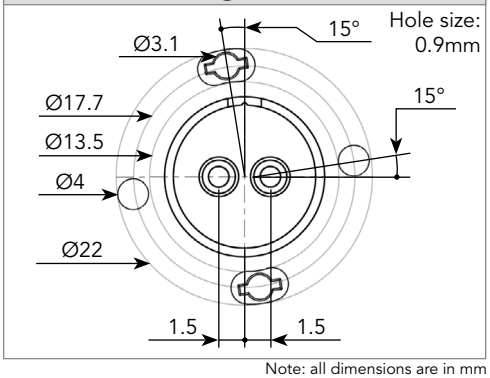


Note: Overmoulded cable assembly dimensions available page 179.

Note: all dimensions are in mm

# 8E2/8D2 (Shell size 8, 2x#20)

## Accessories

### Jam Nut Sealing Caps

IP68/69K

| Part number |
|---|
| UTS8DCG |

IP68/69K Metal terminal

| Part number |
|---|
| UTS8DCGR |

### Square Flange Sealing Cap

IP68/69K Metal terminal

| Part number |
|---|
| UTS8DCGE |

### Plug Protective Cap

IP40

| Part number |
|---|
| UTS68C |

### Plastic Protective Cap

| Part numbers | |
|---|---|
| Receptacle cap | Plug cap |
| 85005585A | 85005594 |

### Gasket

| Part numbers |
|---|
| UTFD11B |

### Color Coding Rings

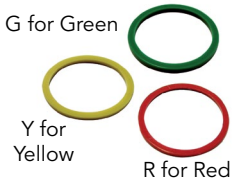


| Part numbers | |
|---|---|
| Receptacles | Plugs |
| UTS78CCRR | UTS68CCRR |
| UTS78CCRY | UTS68CCRY |
| UTS78CCRG | UTS68CCRG |

# 8E2/8D2 (Shell size 8, 2x#20)

## Contacts

| #20 | Contact type | Plating | Cable acceptance (AWG) | Wire stripping length |
|---|---|---|---|---|
| Handsolder | Loaded in the connector | Min 0.4µ gold over 0.8µ Ni | 22 to 18 | 5 mm |
| PCB | Machined (1) | Min 0.4µ gold over 0.8µ Ni | - | - |

(1): For dimensions see page 169

## Electrical Characteristics

**UL**
7A 250V UL94 HB

**CSA**
7A 250V UL94 HB

**IEC**
7A 32V 1.5kV 3

## UTS 8E2/8D2 Derating Curves

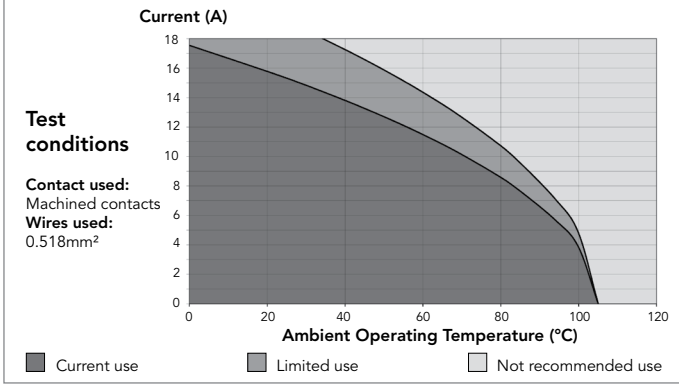

## 12E2/12D2 (Shell size 12, 2x#16)

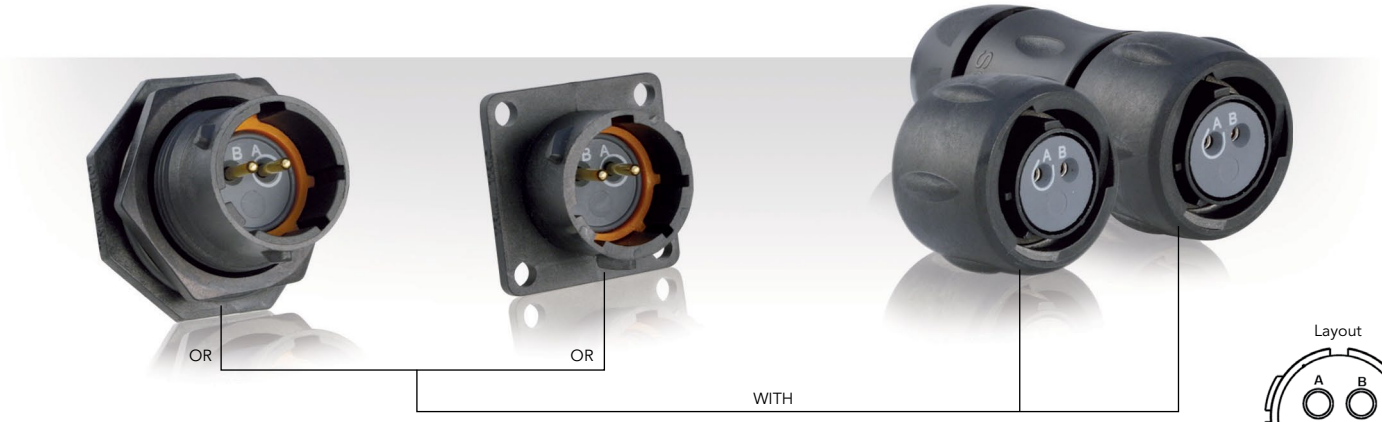


Layout

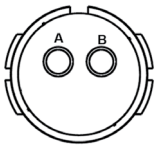


## Connector Part Numbers

| Contact type | Connector type | Backshell | Part number | |
|---|---|---|---|---|
| | | | Male insert | Female insert |
| Handsolder electrical contacts loaded see page 27 | Square flange receptacle | Without (Fig.1) | UTS012E2P | UTS012E2S |
| | Plug | Without (Fig.6) | UTS612E2P | UTS612E2S |
| | | Cable gland (Fig.7) | UTS6JC12E2P | UTS6JC12E2S |
| | Jam nut receptacle | Without (Fig.3) | UTS712E2P | UTS712E2S |
| PCB contacts loaded see page 27 | Square flange receptacle | Without (Fig.2) | UTS012D2P | UTS012D2S |
| | Jam nut receptacle with stand off and with hold down clips | Without (Fig.5) | UTS712D2P32 | UTS712D2S32 |
| | Jam nut receptacle with stand off and without hold down clip | Without (Fig.4) | UTS712D2P | UTS712D2S |

Sealed unmated

## Overmoulded Cable Assembly Part Numbers

| Overmoulding type | Connector type | Wire size (mm²) | Harmonized cable part number (1) | Part number (length: 1m.)* | |
|---|---|---|---|---|---|
| | | | | Male plug | Female plug |
| Straight ending | Plug | 1.5 | H05 VV - F 2x1.5 | HAUTS0V12E2PST100 | HAUTS0V12E2SST100 |
| Right angle ending | Plug | 1.5 | H05 VV - F 2x1.5 | HAUTS0V12E2PRA100 | HAUTS0V12E2SRA100 |

(1) Other cable available on demand

* Other lengths available on demand

# 12E2/12D2 (Shell size 12, 2x#16)

## Dimensions

### Square Flange Receptacle - UTS0

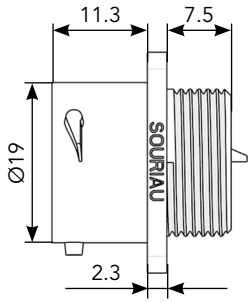


Fig. 1

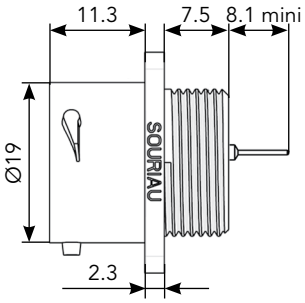


Fig. 2

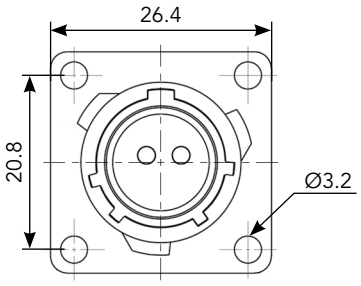


Front view

### Jam Nut Receptacle - UTS7

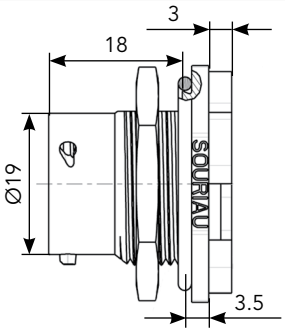


Fig. 3

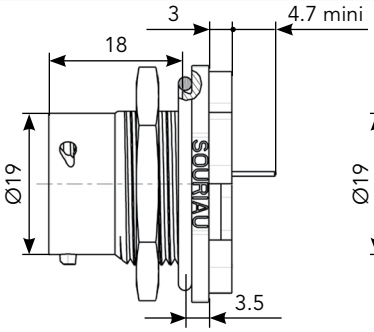


Fig. 4

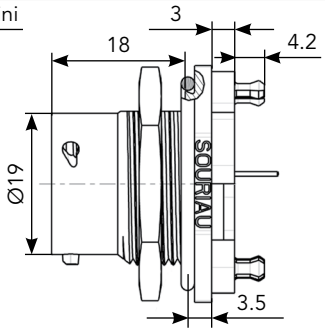


Fig. 5

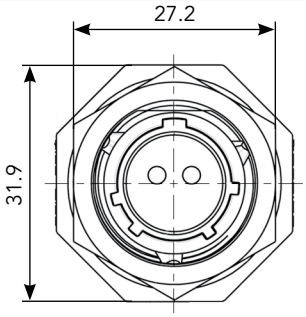


Front view

### Plug - UTS6

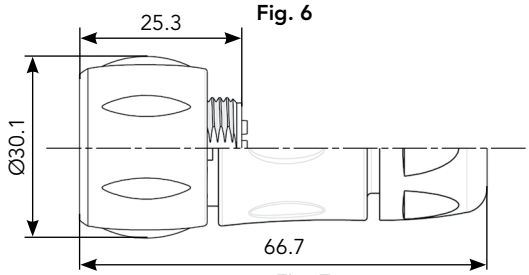


Fig. 6

Fig. 7

### Mated Connector Lengths

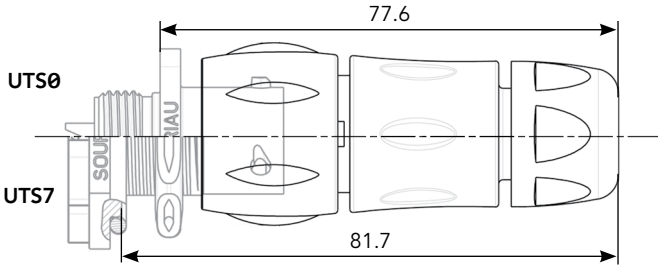


### Panel Cut Out

Square Flange Receptacle - UTS0

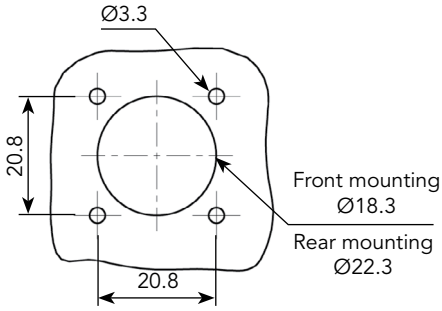


Jam Nut Receptacle - UTS7

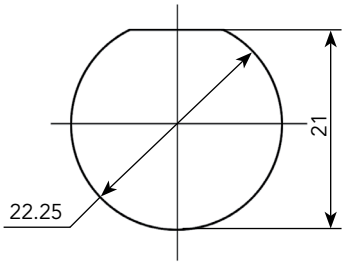


### Drilling Pattern

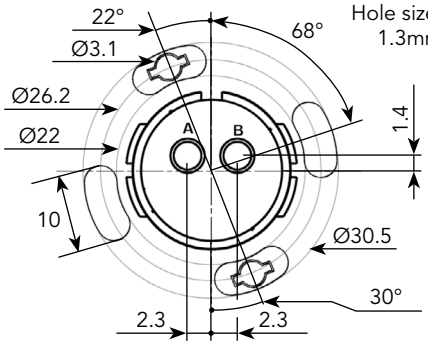


Note: Overmoulded cable assembly dimensions available page 179.

Note: all dimensions are in mm

# 12E2/12D2 (Shell size 12, 2x#16)

## Accessories

### Jam Nut Sealing Caps

IP68/69K

| Part number |
|---|
| UTS12DCG |

IP68/69K Metal terminal

| Part number |
|---|
| UTS12DCGR |

### Square Flange Sealing Cap

IP68/69K Metal terminal

| Part number |
|---|
| UTS12DCGE |

### Plug Sealing Cap

IP68/69K

| Part number |
|---|
| UTS612DCG |

### Plastic Protective Cap

| Part numbers | |
|---|---|
| Receptacle cap | Plug cap |
| 85005587A | 85005596 |

### Gasket

| Part numbers |
|---|
| UTFD13B |

### Color Coding Rings

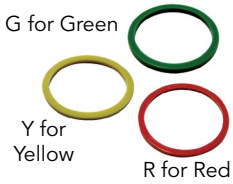


| Part numbers | |
|---|---|
| Receptacles | Plugs |
| UTS712CCRR | UTS612CCRR |
| UTS712CCRY | UTS612CCRY |
| UTS712CCRG | UTS612CCRG |

# 12E2/12D2 (Shell size 12, 2x#16)

## Contacts

| #16 | Contact type | Plating | Cable acceptance (AWG) | Wire stripping length |
|---|---|---|---|---|
| Handsolder | Loaded in the connector | Min 0.4µ gold over 0.8µ Ni | 18 to 14 | 5 mm |
| PCB | Machined (1) | Min 0.4µ gold over 0.8µ Ni | - | - |

(1): For dimensions see page 169

## Electrical Characteristics

**UL**
13A 600V UL94 HB

**CSA**
13A 600V UL94 HB

**IEC**
16A 150V 2.5kV 3

## UTS 12E2/12D2 Derating Curves

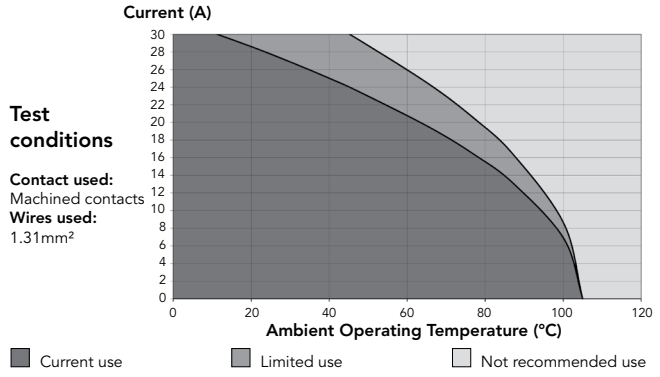

## 103 (Shell size 10, 2 + ground, 3x#16)

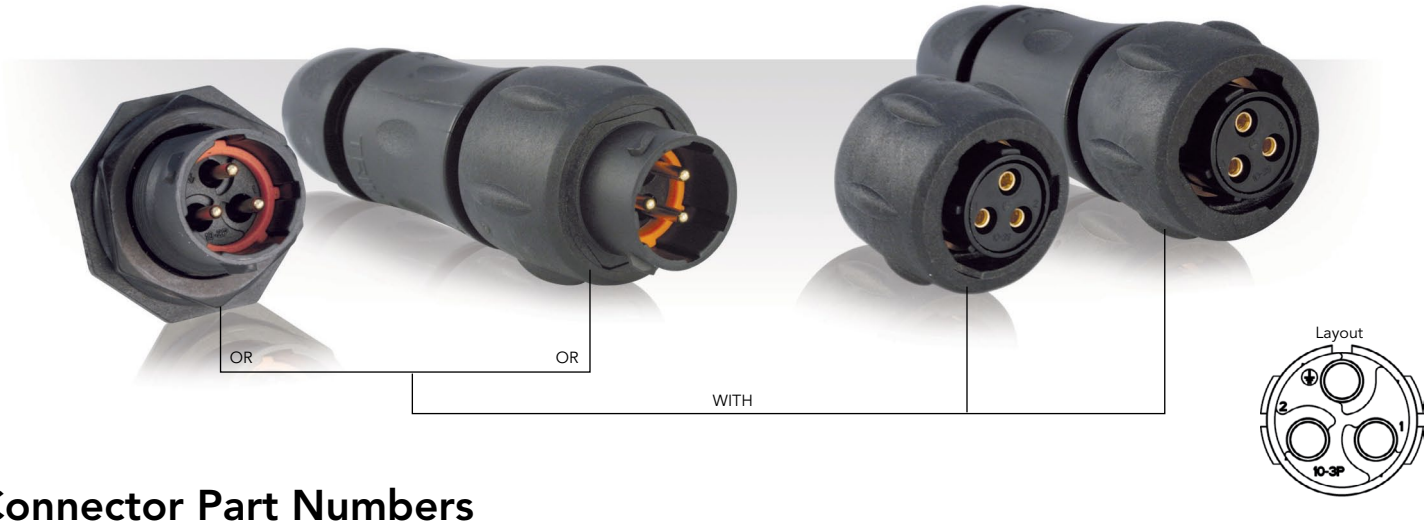


## Connector Part Numbers

| Contact type | Connector type | Backshell | Part number | |
|---|---|---|---|---|
| | | | Male insert | Female insert |
| Crimp contacts supplied separately see page 31 | Free hanging receptacle | Cable gland (Fig. 1) | **UTS1JC103P** | **UTS1JC103S** |
| | Plug | Without (Fig. 2) | **UTS6103P** | **UTS6103S** |
| | | Cable gland (Fig. 3) | **UTS6JC103P** | **UTS6JC103S** |
| | Jam nut receptacle | Without (Fig. 4) | **UTS7103P** | **UTS7103S** |
| PCB contacts supplied separately see page 31 | Jam nut receptacle | Without (Fig. 4) | **UTS7103P** | **UTS7103S** |

## Overmoulded Cable Assembly Part Numbers

| Overmoulding type | Connector type | Wire size ($mm^2$) | Harmonized cable part number (1) | Part number (length: 1m.)* | |
|---|---|---|---|---|---|
| | | | | Male plug | Female plug |
| Straight ending | Plug | 1.5 | H05 VV - F 3x1.5 | **HAUTS0V103PST100** | **HAUTS0V103SST100** |
| Right angle ending | Plug | 1.5 | H05 VV - F 3x1.5 | **HAUTS0V103PRA100** | **HAUTS0V103SRA100** |

(1) Other cable available on demand

* Other lengths available on demand

## 103 (Shell size 10, 2 + ground, 3x#16)

# Dimensions



### Free Hanging - UTS1

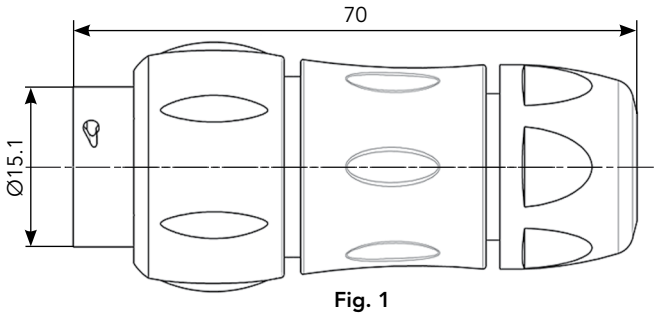


Fig. 1

### Plug - UTS6

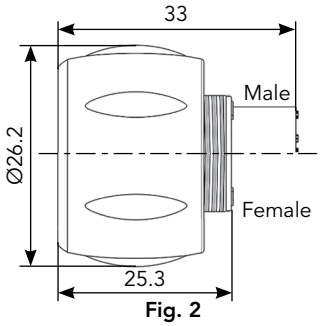


Fig. 2

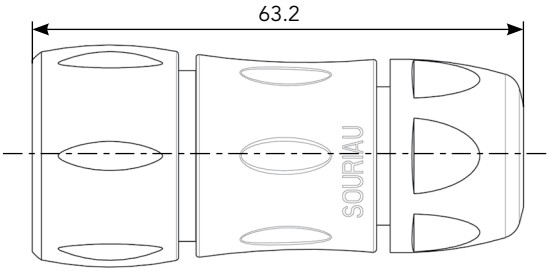


Fig. 3

### Jam Nut Receptacle - UTS7

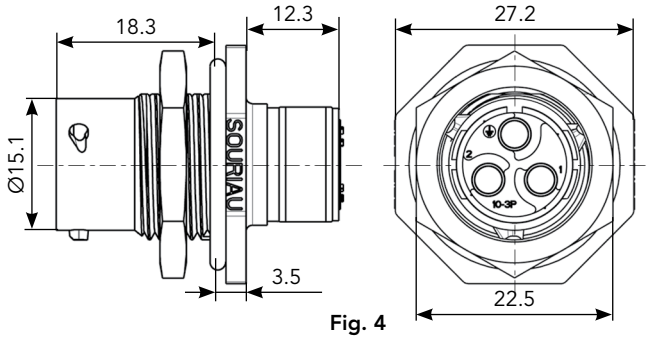


Fig. 4

### Mated Connector Length - UTS7

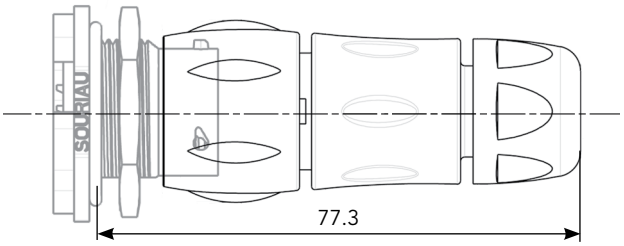


### Panel Cut Out

Jam Nut Receptacle - UTS7

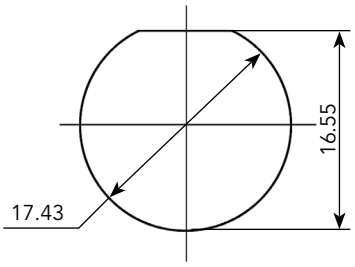


### Drilling Pattern

Hole size:
1.3mm

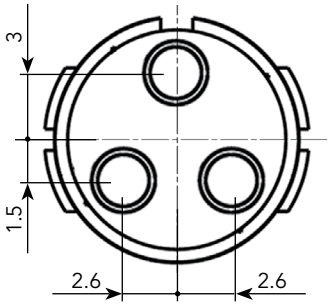


Note: Overmoulded cable assembly dimensions available page 179.

Note: all dimensions are in mm

## 103 (Shell size 10, 2 + ground, 3x#16)

# Accessories and Tooling

### Jam Nut Sealing Caps

IP68/69K

| Part number |
|---|
| UTS10DCG |

IP68/69K Metal terminal

| Part number |
|---|
| UTS10DCGR |

### Handle (without Head)

| Part number |
|---|
| SHANDLES |

### Tool Kit

| Part number |
|---|
| TOOLKIT |

### Plug Sealing Cap

IP68/69K

| Part number |
|---|
| UTS610DCG |

### Extraction Tool #16

| Part number |
|---|
| RX2025GE1 |

### Plastic Protective Cap

| Part numbers | |
|---|---|
| Receptacle cap | Plug cap |
| 85005586A | 85005595 |

### Color Coding Rings

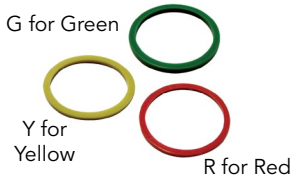


| Part numbers | |
|---|---|
| Receptacles | Plugs |
| UTS710CCRR | UTS610CCRR |
| UTS710CCRY | UTS610CCRY |
| UTS710CCRG | UTS610CCRG |

### Crimp Tooling (without Shandles)

| Contacts | Contact size | Part number of head |
|---|---|---|
| RM/RC 28M1K(1) | Standard contacts #16 Ø 1.6mm | S16RCM20* |
| RM/RC 24M9K(1) | | S16RCM20* |
| RM/RC 20M13K(1) | | S16RCM20* |
| RM/RC 20M12K(1) | | S16RCM20* |
| RM/RC 16M23K(1) | | S16RCM16* |
| RM/RC 14M30K(1) | | S16RCM14* |
| SM/SC 24ML1TK6(1) | | S16SCM20* |
| SM/SC 20ML1TK6(1) | | S16SCM20* |
| SM/SC 16ML1TK6(1) | | S16SCML1* |
| SM/SC 14ML1TK6(1) | | S16SCML1* |
| SM/SC 16ML11TK6(1) | | S16SCML11* |
| RMDXK10D28K | Coaxial contacts | M10S1J with die set & stop bushing see page 200 to 204 |
| RCDXK1D28K | | |
| RM/RC DX60xxD28K | | |
| RM/RC DXK10D28 + york090 | | |
| RM/RC DX60xxD28 | | |

(1): Example of plating, for other plating options see page 164
* Heads to be used with handle PN: SHANDLES

Handle Head Complete set

## 103 (Shell size 10, 2 + ground, 3x#16)

# Contacts



| #16 | Contact type | AWG | Part number | | Max wire Ø | Max insulator Ø |
|---|---|---|---|---|---|---|
| | | | Male | Female | | |
| Crimp | Machined | 30-28 | RM28M1K(1) | RC28M1K(1) | 0.55 | 1.00 |
| | | 26-24 | RM24M9K(1) | RC24M9K(1) | 0.80 | 1.60 |
| | | 22-20 | RM20M13K(1) | RC20M13K(1) | 1.15 | 1.80 |
| | | 22-20 | RM20M12K(1) | RC20M12K(1) | 1.15 | 2.20 |
| | | 20-16 | RM16M23K(1) | RC16M23K(1) | 1.80 | 3.20 |
| | | 16-14 | RM14M30K(1) | RC14M30K(1) | 2.30 | 3.20 |
| | Stamped & Formed reeled contacts<br>See note (2) for loose piece | 26-24 | SM24M1TK6(1)(2) | SC24M1TK6(1)(2) | - | 0.90-1.60 |
| | | 22-20 | SM20M1TK6(1)(2) | SC20M1TK6(1)(2) | - | 1.20-2.10 |
| | | 18-16 | SM16M1TK6(1)(2) | SC16M1TK6(1)(2) | - | 3.20 |
| | | 18-16 | SM16M11TK6(1)(2) | SC16M11TK6(1)(2) | - | 3.00 |
| | | 14 | SM14M1TK6(1)(2) | SC14M1TK6(1)(2) | - | 3.20 |
| PCB | Machined (3) | - | RM20M12E83K(1) | RC20M12E84K(1) | - | - |
| Coaxial | Cable Multipiece | see pages 167, 200 to 206 | RMDXK10D28 | RCDXK1D28 | - | - |
| | Cable Monocrimp | | RMDX60xxD28 | RCDX60xxD28 | - | - |
| | Twisted pair Multipiece | | RMDXK10D28 + york090 | RCDXK1D28 + york090 | - | - |
| | Twisted pair Monocrimp | | RMDX60xxD28 | RCDX60xxD28 | - | - |
| Fiber optic | POF contacts<br>(Plastic Optical Fiber) | - | RMPOF1000 | RCPOF1000B | - | - |

(1): Example of plating, for other plating see page 164 (2): Loose piece contact available if putting L. Example: SM20ML1TK6 (3): For dimensions see page 168 Note: all dimensions are in mm

## Electrical Characteristics

**UL**
10A 500V UL94 V-0

**CSA**
7A 500V UL94 V-0

**IEC**
16A 300V 4kV 3
Temperature elevation: 50°C

## UTS 103 Derating Curves

**Test conditions**

**Contact used:**
Machined contacts
**Wires used:**
1.31mm²

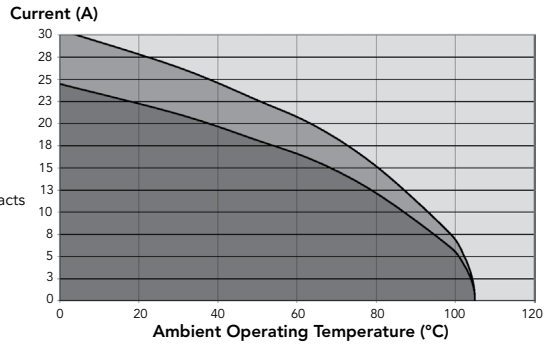


Current use | Limited use | Not recommended use

## 142G1 (Shell size 14, 2 + ground, 3x#8)

## Connector Part Numbers

| Contact type | Connector type | Backshell | Part number | |
|---|---|---|---|---|
| | | | Male insert | Female insert |
| Crimp contacts supplied separately see page 35 | Square flange receptacle | Without (Fig. 1) | UTS0142G1P | - |
| | Free hanging receptacle | Cable gland (Fig. 6) | UTS1JC142G1P | UTS1JC142G1S |
| | Plug | Without (Fig. 3) | UTS6142G1P | UTS6142G1S |
| | | Cable gland (Fig. 4) | UTS6JC142G1P | UTS6JC142G1S |
| | Jam nut receptacle | Without (Fig. 2) | UTS7142G1P | UTS7142G1S |
| | NPT threaded receptacle | Without (Fig. 5) | - | UTS7142G1SNPT |
| PCB contacts supplied separately see page 35 | Square flange receptacle | Without (Fig. 1) | UTS0142G1P | - |
| | Jam nut receptacle | Without (Fig. 2) | UTS7142G1P | UTS7142G1S |
| | NPT threaded receptacle | Without (Fig. 5) | - | UTS7142G1SNPT |
| | NPT threaded receptacle with nut | Without (Fig. 5) | - | UTS7142G1SNPTNUT |

## Overmoulded Cable Assembly Part Numbers

| Overmoulding type | Connector type | Wire size (mm²) | Harmonized cable part number (1) | Part number (length: 1m.)* | |
|---|---|---|---|---|---|
| | | | | Male plug | Female plug |
| Straight ending | Plug | 0.5 | H05 VV - F 3x0.5 | HAUTS0V142G1PST100 | HAUTS0V142G1SST100 |
| Right angle ending | Plug | 0.5 | H05 VV - F 3x0.5 | HAUTS0V142G1PRA100 | HAUTS0V142G1SRA100 |

(1) Other cable available on demand

* Other lengths available on demand

# 142G1 (Shell size 14, 2 + ground, 3x#8)

## Dimensions



### Square Flange Receptacle - UTS0

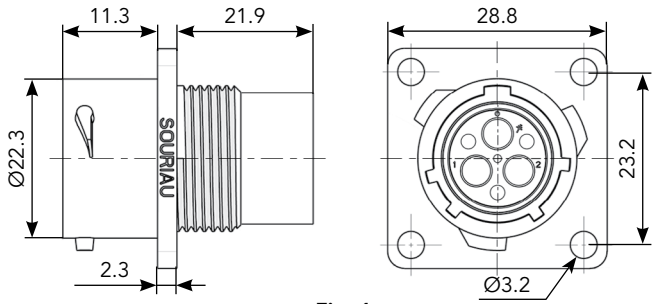


Fig. 1 Fig. 1

### Jam Nut Receptacle - UTS7

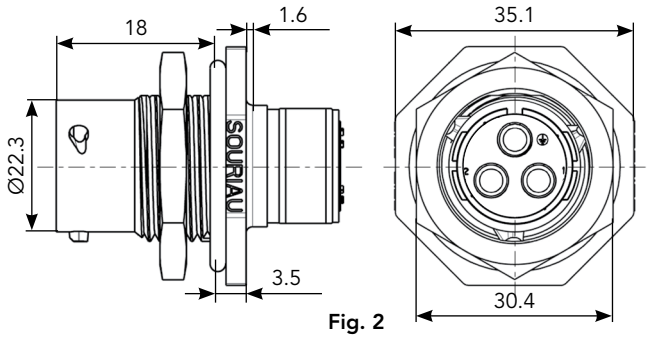


Fig. 2

### Plug - UTS6

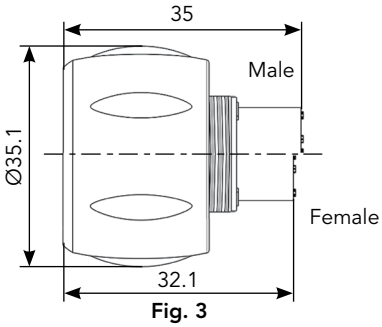


Fig. 3

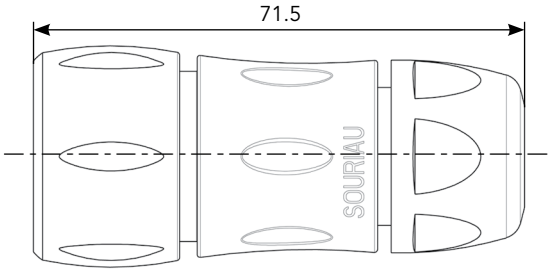


Fig. 4

### NPT Threaded Receptacle - UTS7

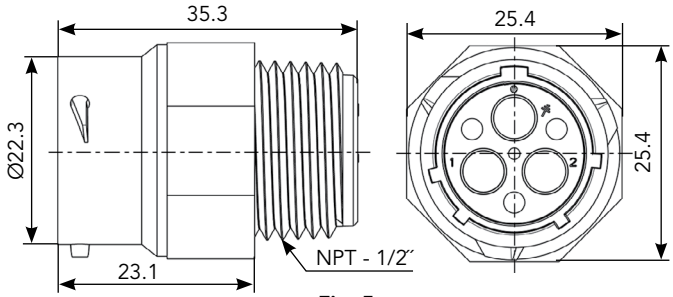


Fig. 5

### Free Hanging - UTS1

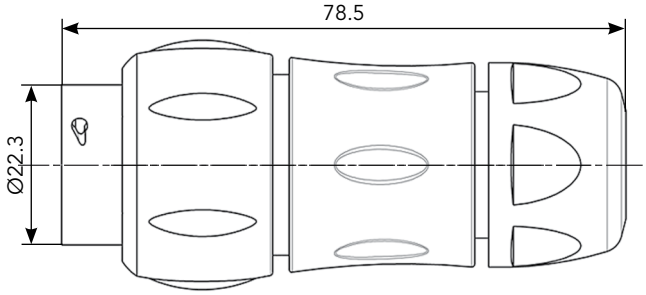


Fig. 6

### Panel Cut Out

Jam Nut Receptacle - UTS7

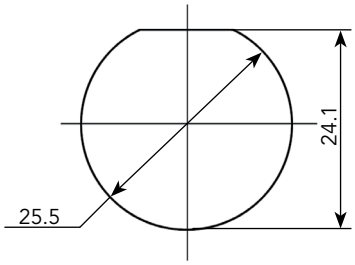


NPT

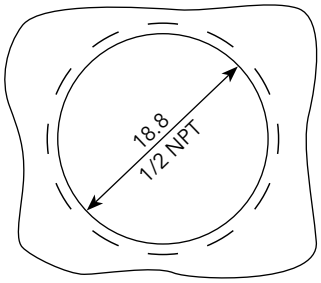


### Drilling Pattern

Hole size: 3.3mm

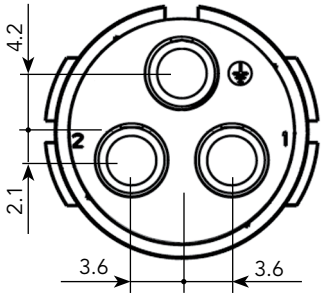


Note: Overmoulded cable assembly dimensions available page 179.

Note: all dimensions are in mm

## 142G1 (Shell size 14, 2 + ground, 3x#8)

# Accessories and Tooling

### Jam Nut or NPT Threaded Receptacle Sealing Caps

IP68/69K

| Part number |
|---|
| UTS14DCG |

IP68/69K Metal terminal

| Part number |
|---|
| UTS14DCGR |

### Hand Tool

| Part number |
|---|
| M317 |

### Plug Sealing Cap

IP68/69K

| Part number |
|---|
| UTS614DCG |

### Positioner + Locator Setting #8

| Part number |
|---|
| VGE10078A |

### Plastic Protective Cap

| Part numbers | |
|---|---|
| Receptacle cap | Plug cap |
| 85005588A | 85005597 |

### Gasket

| Part numbers |
|---|
| UTFD14B |

### Extraction Tool #8

| Part number |
|---|
| 51060210936 |

### Color Coding Rings

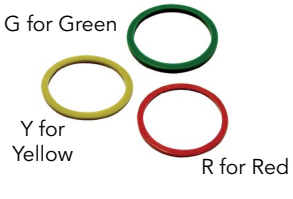


| Part numbers | |
|---|---|
| Receptacles | Plugs |
| UTS714CCRR | UTS614CCRR |
| UTS714CCRY | UTS614CCRY |
| UTS714CCRG | UTS614CCRG |

# 142G1 (Shell size 14, 2 + ground, 3x#8)

## Contacts



| #8 | Contact type | AWG | Part number | | Max wire Ø | Max insulator Ø |
|---|---|---|---|---|---|---|
| | | | Male | Female | | |
| Crimp | Machined | 16 | 82913601A(1) | 82913600A(1) | 1.72 mm | 6.5 mm |
| | | 14 | 82913603A(1) | 82913602A(1) | 2.22 mm | |
| | | 12 | 82913605A(1) | 82913604A(1) | 2.82 mm | |
| | | 10 | 82913607A(1) | 82913606A(1) | 3.50 mm | |
| | | 8 | 82913609A(1) | 82913608A(1) | 4.35 mm | |
| PCB | Machined (2) | - | 82911685NPC(1) | 82911684NPC(1) | - | - |

(1): Example of plating, for other plating see page 164
(2): For dimensions see page 168

## Electrical Characteristics

**UL**
44A 600V UL94 V-0

**CSA**
30A 600V UL94 V-0

**IEC**
40A 300V 4kV 3

## UTS 142G1 Derating Curves

**Test conditions**

**Contact used:**
Machined contacts
**Wires used:**
8.37mm²

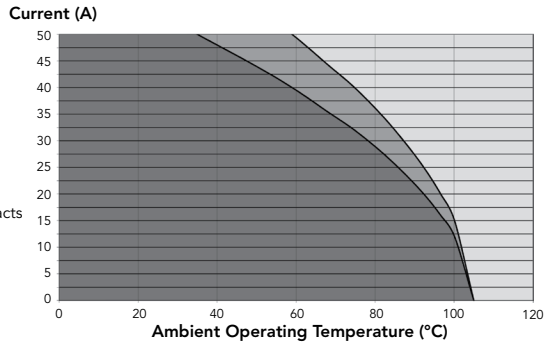


Current use | Limited use | Not recommended use

## 8E3/8D3 (Shell size 8, 3x#20)

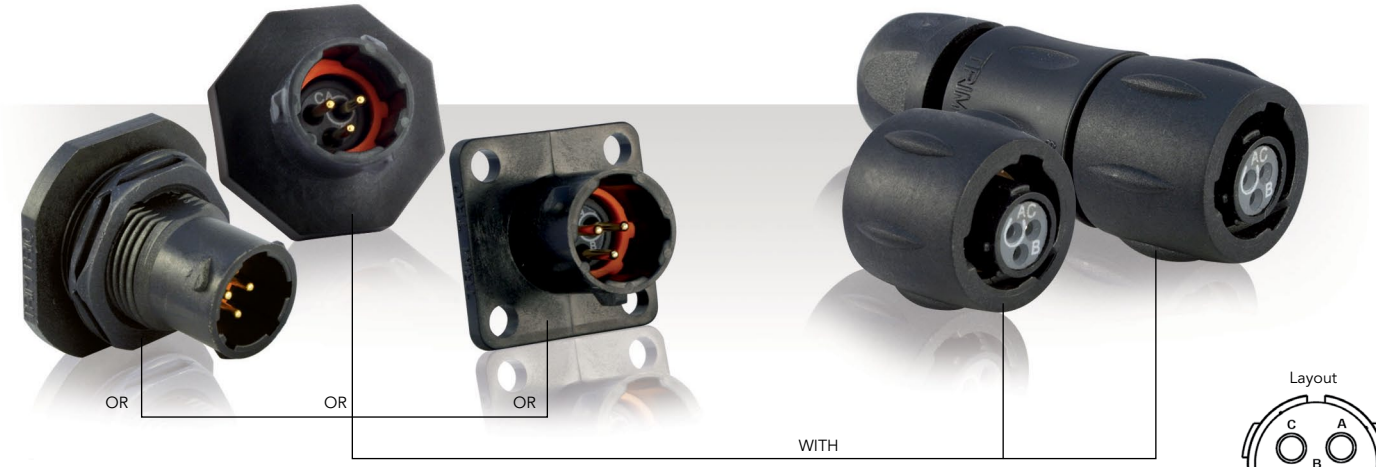


Layout

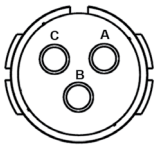


## Connector Part Numbers

| Contact type | Connector type | Backshell | Part number | |
|---|---|---|---|---|
| | | | Male insert | Female insert |
| Handsolder electrical contacts loaded see page 39 | Square flange receptacle | Without (Fig. 1) | UTS08E3P | UTS08E3S |
| | Plug | Without (Fig. 7) | UTS68E3P | UTS68E3S |
| | | Cable gland (Fig. 8) | UTS6JC8E3P | UTS6JC8E3S |
| | Jam nut receptacle | Without (Fig. 4) | UTS78E3P | UTS78E3S |
| | M12 threaded receptacle | Without (Fig.3) | UTS78E3PM12 | UTS78E3SM12 |
| PCB contacts loaded see page 39 | Square flange receptacle | Without (Fig. 2) | UTS08D3P | UTS08D3S |
| | Jam nut receptacle with stand off and with hold down clips | Without (Fig. 6) | UTS78D3P32 | UTS78D3S32 |
| | Jam nut receptacle with stand off and without hold down clip | Without (Fig. 5) | UTS78D3P | UTS78D3S |
| | M12 threaded receptacle | Without (Fig.3) | UTS78D3PM12 | UTS78D3SM12 |

Possibilities of discrimination/keying methods see page 208

Sealed unmated

## Overmoulded Cable Assembly Part Numbers

| Overmoulding type | Connector type | Wire size (mm²) | Harmonized cable part number (1) | Part number (length: 1m.)* | |
|---|---|---|---|---|---|
| | | | | Male plug | Female plug |
| Straight ending | Plug | 0.5 | H05 VV - F 3x0.5 | HAUTS0V8E3PST100 | HAUTS0V8E3SST100 |
| Right angle ending | Plug | 0.5 | H05 VV - F 3x0.5 | HAUTS0V8E3PRA100 | HAUTS0V8E3SRA100 |

(1) Other cable available on demand

* Other lengths available on demand

# 8E3/8D3 (Shell size 8, 3x#20)

## Dimensions

### Square Flange Receptacle - UTS0

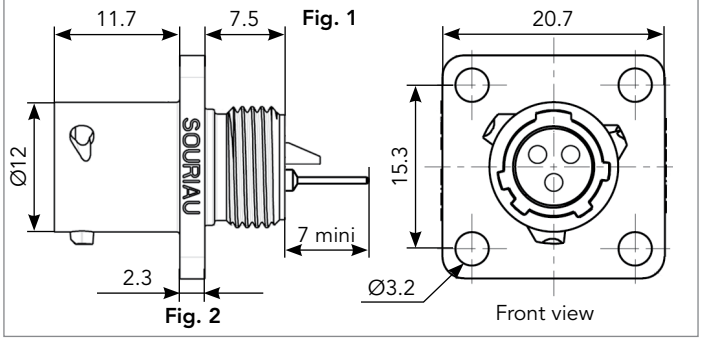


### M12 Threaded Receptacle - UTS7

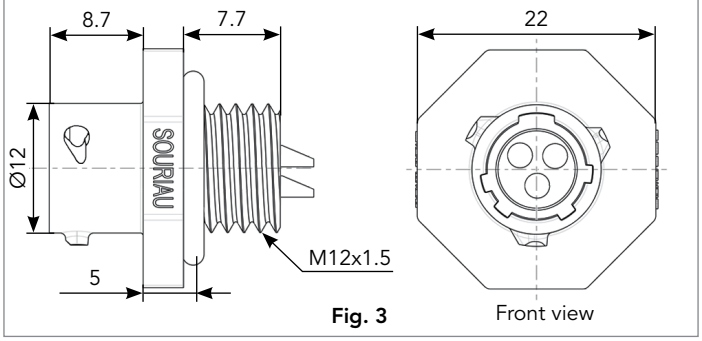


### Jam Nut Receptacle - UTS7

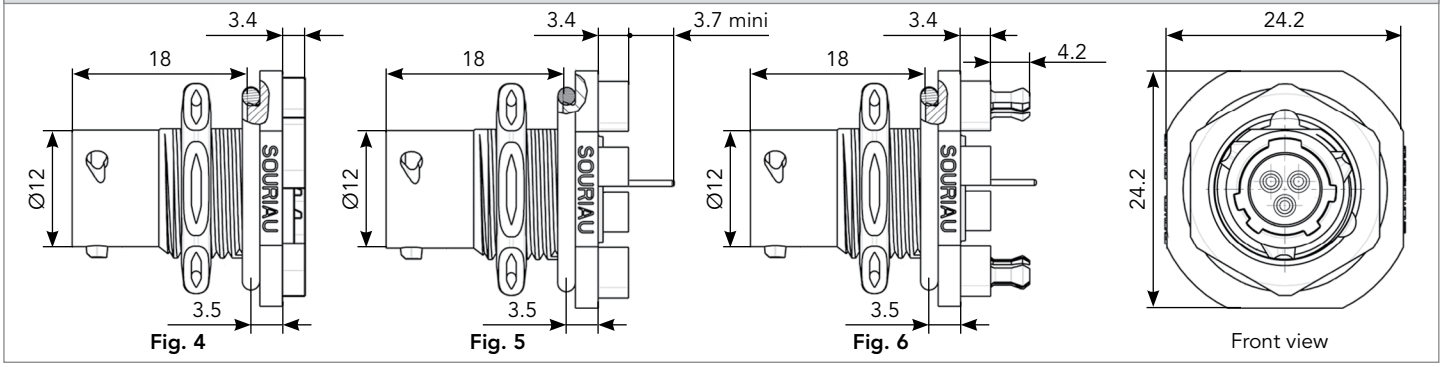


### Plug - UTS6

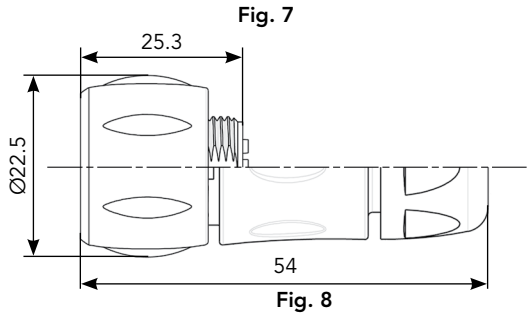


### Mated Connector Lengths

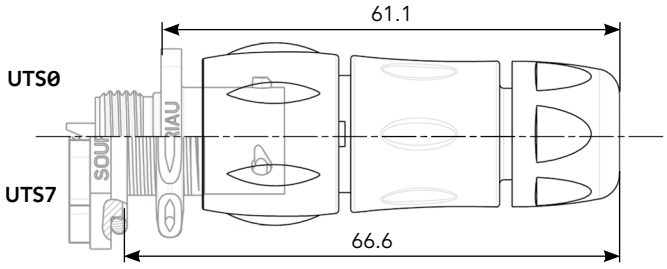


### Panel Cut Out

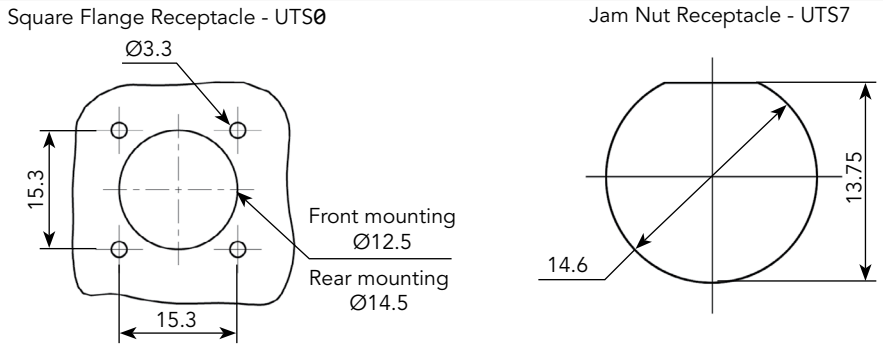


### Drilling Pattern

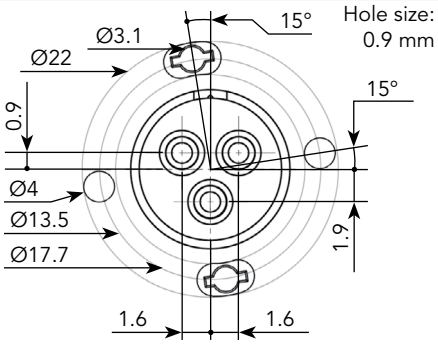


Note: Overmoulded cable assembly dimensions available page 179.

Note: all dimensions are in mm

## 8E3/8D3 (Shell size 8, 3x#20)

## Accessories

### Jam Nut Sealing Caps

IP68/69K

| Part number |
|---|
| UTS8DCG |

IP68/69K Metal terminal

| Part number |
|---|
| UTS8DCGR |

### Square Flange Sealing Cap

IP68/69K Metal terminal

| Part number |
|---|
| UTS8DCGE |

### Plug Protective Cap

IP40

| Part number |
|---|
| UTS68C |

### Plastic Protective Cap

| Part numbers | |
|---|---|
| Receptacle cap | Plug cap |
| 85005585A | 85005594 |

### Gasket

| Part numbers |
|---|
| UTFD11B |

### Color Coding Rings

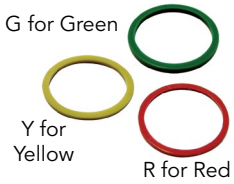


| Part numbers | |
|---|---|
| Receptacles | Plugs |
| UTS78CCRR | UTS68CCRR |
| UTS78CCRY | UTS68CCRY |
| UTS78CCRG | UTS68CCRG |

# 8E3/8D3 (Shell size 8, 3x#20)

## Contacts

| #20 | Contact type | Plating | Cable acceptance (AWG) | Wire stripping length |
|---|---|---|---|---|
| Handsolder | Loaded in the connector | Min 0.4µ gold over 0.8µ Ni | 22 to 18 | 5 mm |
| PCB | Machined (1) | Min 0.4µ gold over 0.8µ Ni | - | - |

(1): For dimensions see page 169

## Electrical Characteristics

**UL**
7A 250V UL94 HB

**CSA**
7A 250V UL94 HB

**IEC**
7A 32V 1.5kV 3

## UTS 8E3/8D3 Derating Curves

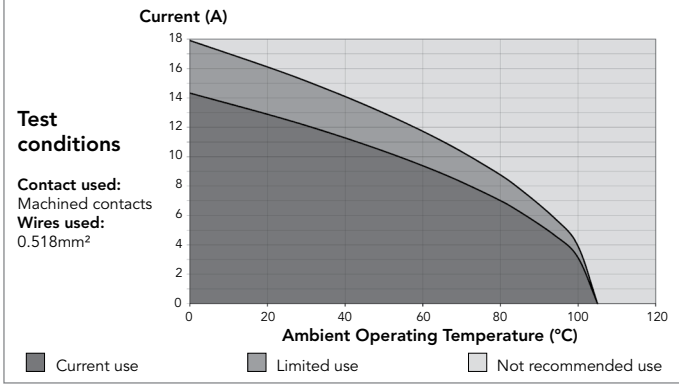

## 8E3A/8E98 - 8D3A/8D98 (Shell size 8, 3x#20)

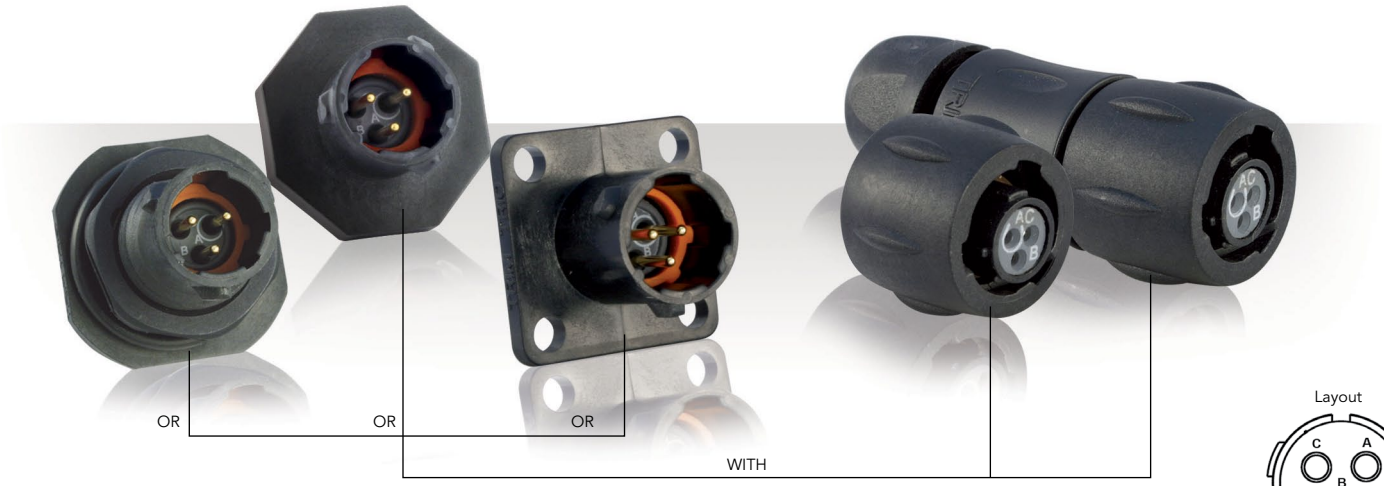


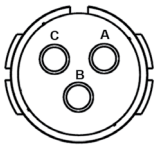


## Connector Part Numbers

| Contact type | Connector type | Backshell | Part number | |
|---|---|---|---|---|
| | | | Male insert | Female insert |
| Handsolder electrical contacts loaded see page 43 | Square flange receptacle | Without (Fig. 1) | UTS08E3AP | UTS08E3AS |
| | | | UTS08E98P | UTS08E98S |
| | Plug | Without (Fig. 7) | UTS68E3AP | UTS68E3AS |
| | | | UTS68E98P | UTS68E98S |
| | | Cable gland (Fig. 8) | UTS6JC8E3AP | UTS6JC8E3AS |
| | | | UTS6JC8E98P | UTS6JC8E98S |
| | Jam nut receptacle | Without (Fig. 4) | UTS78E3AP | UTS78E3AS |
| | | | UTS78E98P | UTS78E98S |
| | M12 threaded receptacle | Without (Fig. 3) | UTS78E3APM12 | UTS78E3ASM12 |
| | | | UTS78E98PM12 | UTS78E98SM12 |
| PCB contacts loaded see page 43 | Square flange receptacle | Without (Fig. 2) | UTS08D3AP | UTS08D3AS |
| | | | UTS08D98P | UTS08D98S |
| | Jam nut receptacle with stand off and with hold down clips | Without (Fig. 6) | UTS78D3AP32 | UTS78D3AS32 |
| | | | UTS78D98P32 | UTS78D98S32 |
| | Jam nut receptacle with stand off and without hold down clip | Without (Fig. 5) | UTS78D3AP | UTS78D3AS |
| | | | UTS78D98P | UTS78D98S |
| | M12 threaded receptacle | Without (Fig. 3) | UTS78D3APM12 | UTS78D3ASM12 |
| | | | UTS78D98PM12 | UTS78D98SM12 |

Possibilities of discrimination/keying methods see page 208

Sealed unmated

## Overmoulded Cable Assembly Part Numbers

| Overmoulding type | Connector type | Wire size (mm²) | Harmonized cable part number (1) | Part number (length: 1m.)* | |
|---|---|---|---|---|---|
| | | | | Male plug | Female plug |
| Straight ending | Plug | 0.5 | H05 VV - F 3x0.5 | HAUTS0V8E3APST100 | HAUTS0V8E3ASST100 |
| Right angle ending | Plug | 0.5 | H05 VV - F 3x0.5 | HAUTS0V8E3APRA100 | HAUTS0V8E3ASRA100 |

(1) Other cable available on demand

* Other lengths available on demand

# 8E3A/8E98 - 8D3A/8D98 (Shell size 8, 3x#20)

## Dimensions

### Square Flange Receptacle - UTS0

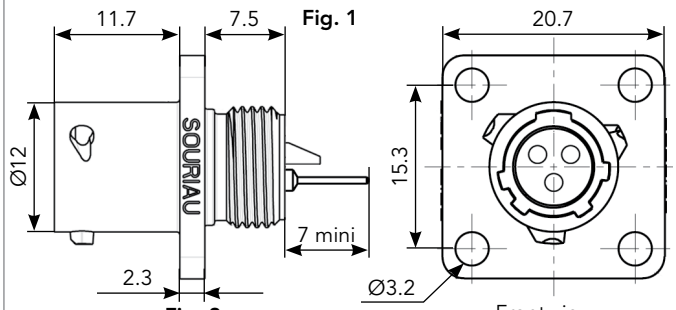


### M12 Threaded Receptacle - UTS7

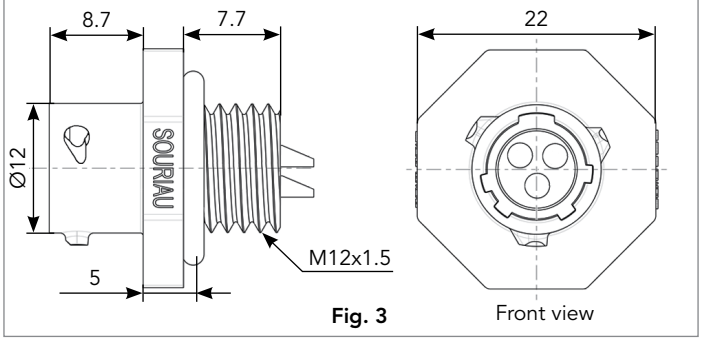


### Jam Nut Receptacle - UTS7

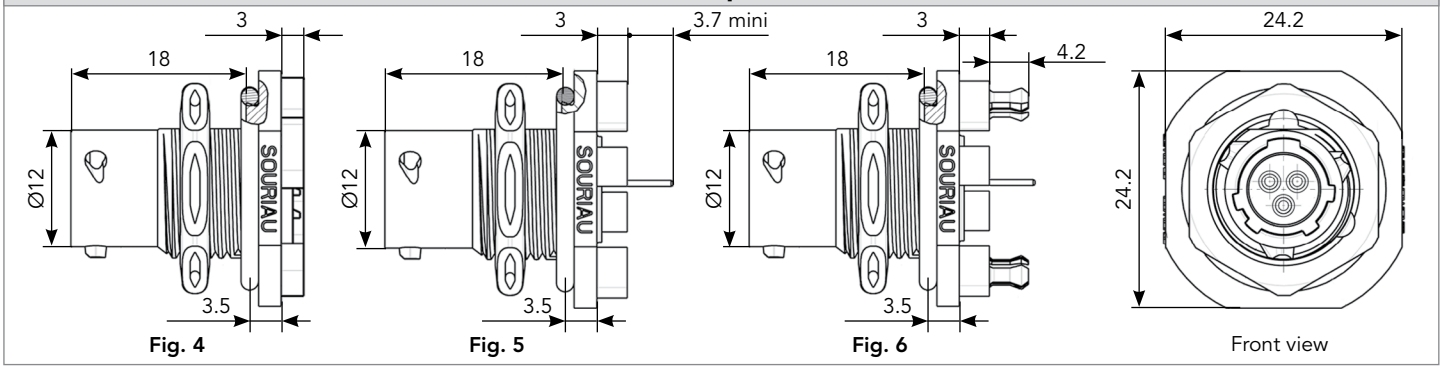


### Plug - UTS6

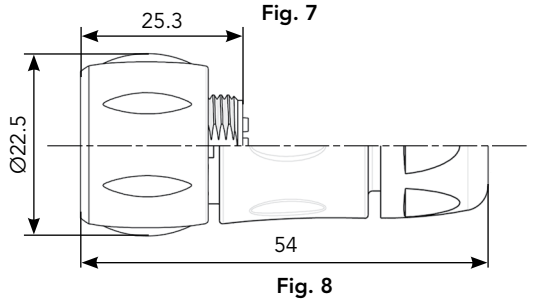


### Mated Connector Lengths

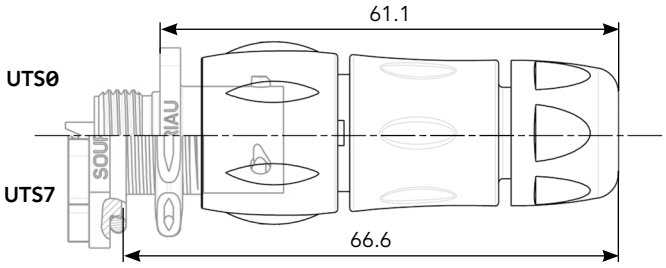


### Panel Cut Out

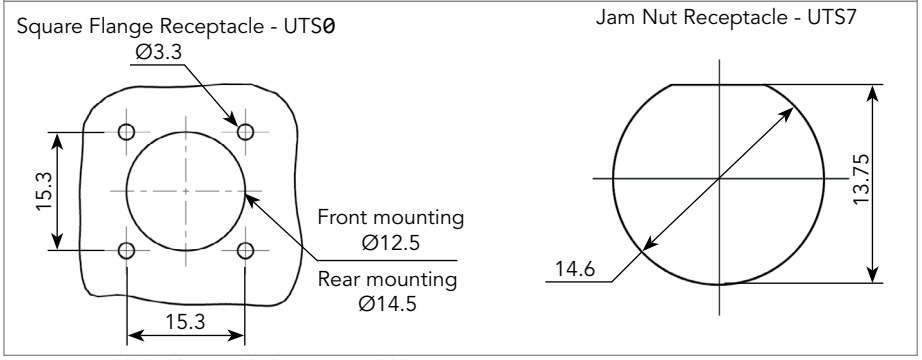


### Drilling Pattern

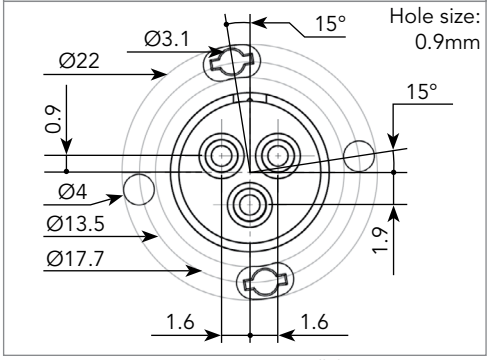


Note: Overmoulded cable assembly dimensions available page 179.

Note: all dimensions are in mm

# 8E3A/8E98 - 8D3A/8D98 (Shell size 8, 3x#20)

## Accessories

### Jam Nut Sealing Caps

IP68/69K

| Part number |
|---|
| UTS8DCG |

IP68/69K Metal terminal

| Part number |
|---|
| UTS8DCGR |

### Square Flange Sealing Cap

IP68/69K Metal terminal

| Part number |
|---|
| UTS8DCGE |

### Plug Protective Cap

IP40

| Part number |
|---|
| UTS68C |

### Plastic Protective Cap

| Part numbers | |
|---|---|
| Receptacle cap | Plug cap |
| 85005585A | 85005594 |

### Gasket

| Part numbers |
|---|
| UTFD11B |

### Color Coding Rings

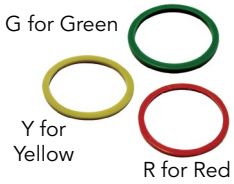


| Part numbers | |
|---|---|
| Receptacles | Plugs |
| UTS78CCRR | UTS68CCRR |
| UTS78CCRY | UTS68CCRY |
| UTS78CCRG | UTS68CCRG |

# 8E3A/8E98 - 8D3A/8D98 (Shell size 8, 3x#20)

## Contacts

| #20 | Contact type | Plating | Cable acceptance (AWG) | Wire stripping length |
|---|---|---|---|---|
| Handsolder | Loaded in the connector | Min 0.4µ gold over 0.8µ Ni | 22 to 18 | 5 mm |
| PCB | Machined (1) | Min 0.4µ gold over 0.8µ Ni | - | - |

(1): For dimensions see page 169

## Electrical Characteristics

**UL**
7A 250V UL94 HB

**CSA**
7A 250V UL94 HB

**IEC**
7A 50V 1.5kV 3

## UTS 8E3A/98 - 8D3A/98 Derating Curves

**Test conditions**

**Contact used:**
Machined contacts
**Wires used:**
0.518mm²

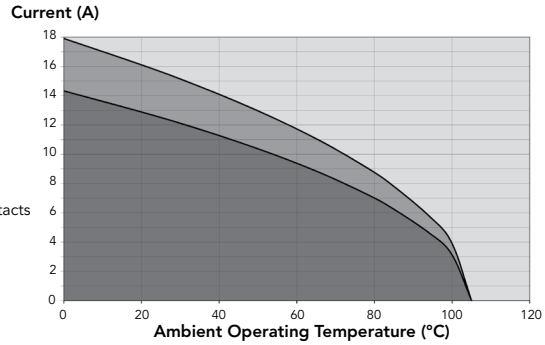


Current use | Limited use | Not recommended use

## 8E33/8D33 (Shell size 8, 3x#20)

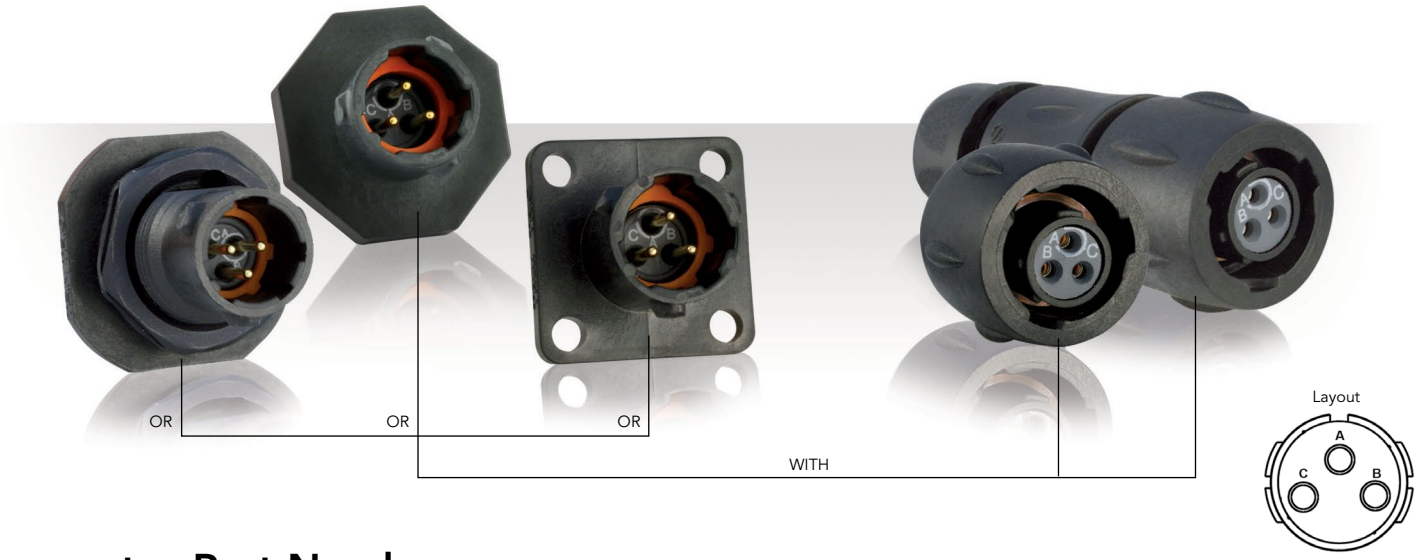


## Connector Part Numbers

| Contact type | Connector type | Backshell | Part number | |
|---|---|---|---|---|
| | | | Male insert | Female insert |
| Handsolder electrical contacts loaded see page 47 | Square flange receptacle | Without (Fig. 1) | UTS08E33P | UTS08E33S |
| | Plug | Without (Fig. 7) | UTS68E33P | UTS68E33S |
| | | Cable gland (Fig. 8) | UTS6JC8E33P | UTS6JC8E33S |
| | Jam nut receptacle | Without (Fig. 4) | UTS78E33P | UTS78E33S |
| | M12 threaded receptacle | Without (Fig. 3) | UTS78E33PM12 | UTS78E33SM12 |
| PCB contacts loaded see page 47 | Square flange receptacle | Without (Fig. 2) | UTS08D33P | UTS08D33S |
| | Jam nut receptacle with stand off and with hold down clips | Without (Fig. 6) | UTS78D33P32 | UTS78D33S32 |
| | Jam nut receptacle with stand off and without hold down clip | Without (Fig. 5) | UTS78D33P | UTS78D33S |
| | M12 threaded receptacle | Without (Fig. 3) | UTS78D33PM12 | UTS78D33SM12 |

Possibilities of discrimination/keying methods see page 208

Sealed unmated

## Overmoulded Cable Assembly Part Numbers

| Overmoulding type | Connector type | Wire size (mm²) | Harmonized cable part number (1) | Part number (length: 1m.)* | |
|---|---|---|---|---|---|
| | | | | Male plug | Female plug |
| Straight ending | Plug | 0.5 | H05 VV - F 3x0.5 | HAUTS0V8E33APST100 | HAUTS0V8E33ASST100 |
| Right angle ending | Plug | 0.5 | H05 VV - F 3x0.5 | HAUTS0V8E33APRA100 | HAUTS0V8E33ASRA100 |

(1) Other cable available on demand

* Other lengths available on demand

# 8E33/8D33 (Shell size 8, 3x#20)

## Dimensions

### Square Flange Receptacle - UTS0

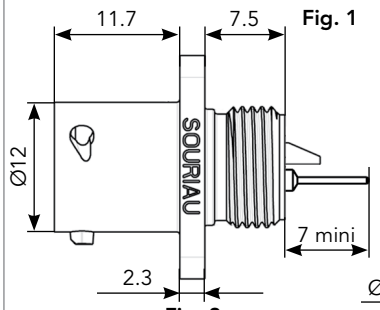


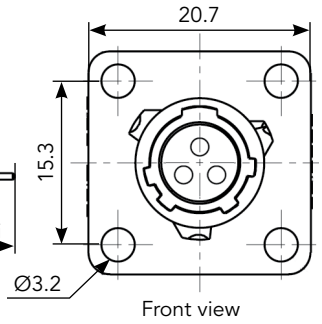


### M12 Threaded Receptacle - UTS7

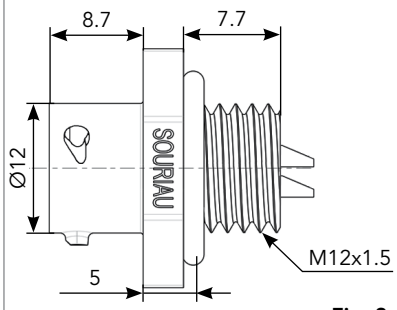


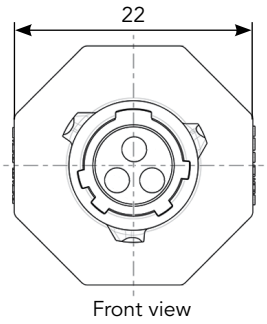


### Jam Nut Receptacle - UTS7

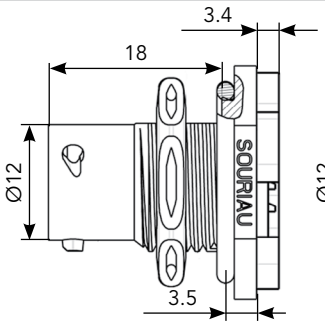


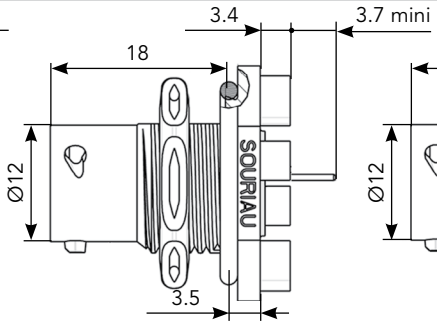


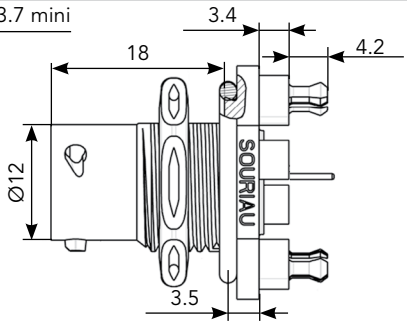


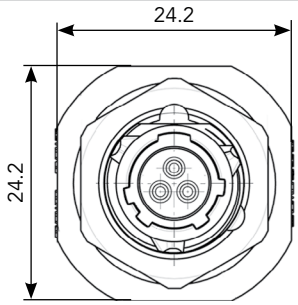


### Plug - UTS6

Fig. 7

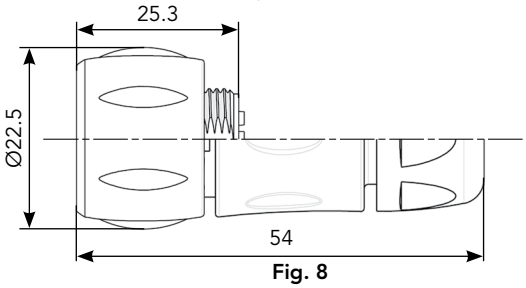


Fig. 8

### Mated Connector Lengths

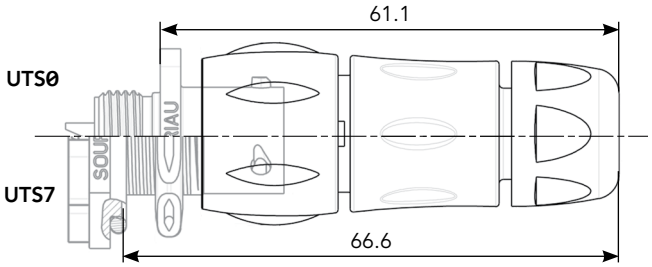


### Panel Cut Out

Square Flange Receptacle - UTS0

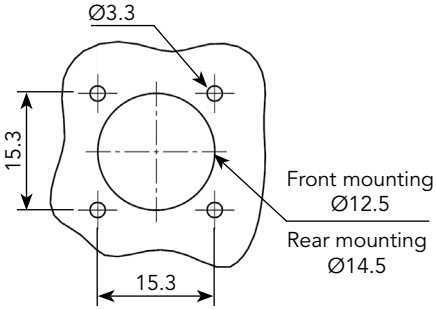


Jam Nut Receptacle - UTS7

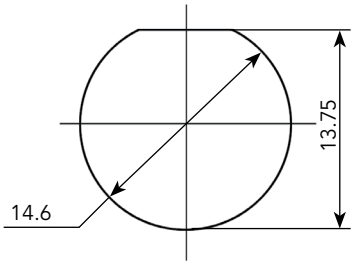


### Drilling Pattern

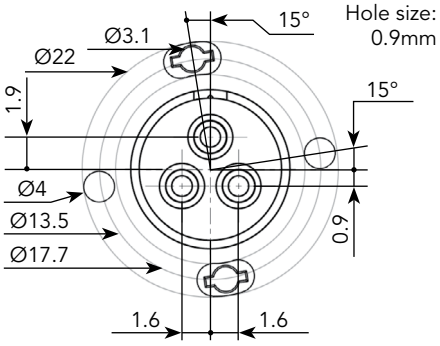


Note: Overmoulded cable assembly dimensions available page 179.

Note: all dimensions are in mm

# 8E33/8D33 (Shell size 8, 3x#20)

## Accessories

### Jam Nut Sealing Caps

IP68/69K

| Part number |
|---|
| UTS8DCG |

IP68/69K Metal terminal

| Part number |
|---|
| UTS8DCGR |

### Square Flange Sealing Cap

IP68/69K Metal terminal

| Part number |
|---|
| UTS8DCGE |

### Plug Protective Cap

IP40

| Part number |
|---|
| UTS68C |

### Plastic Protective Cap

| Part numbers | |
|---|---|
| Receptacle cap | Plug cap |
| 85005585A | 85005594 |

### Gasket

| Part numbers |
|---|
| UTFD11B |

### Color Coding Rings

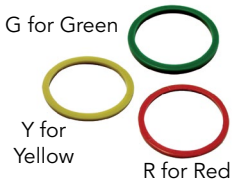


| Part numbers | |
|---|---|
| Receptacles | Plugs |
| UTS78CCRR | UTS68CCRR |
| UTS78CCRY | UTS68CCRY |
| UTS78CCRG | UTS68CCRG |

# 8E33/8D33 (Shell size 8, 3x#20)

## Contacts

| #20 | Contact type | Plating | Cable acceptance (AWG) | Wire stripping length |
|---|---|---|---|---|
| Handsolder | Loaded in the connector | Min 0.4µ gold over 0.8µ Ni | 22 to 18 | 5 mm |
| PCB | Machined [1] | Min 0.4µ gold over 0.8µ Ni | - | - |

(1): For dimensions see page 169

## Electrical Characteristics

**UL**
7A 250V UL94 HB

**CSA**
7A 250V UL94 HB

**IEC**
7A 50V 1.5kV 3

## UTS 8E33/8D33 de-rating curves

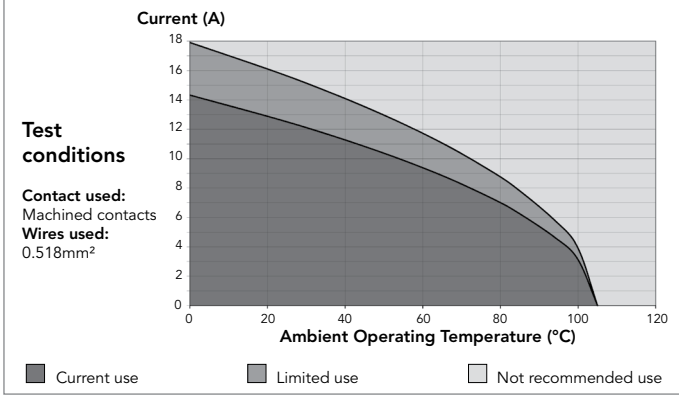

## 12E3/12D3 (Shell size 12, 3x#16)

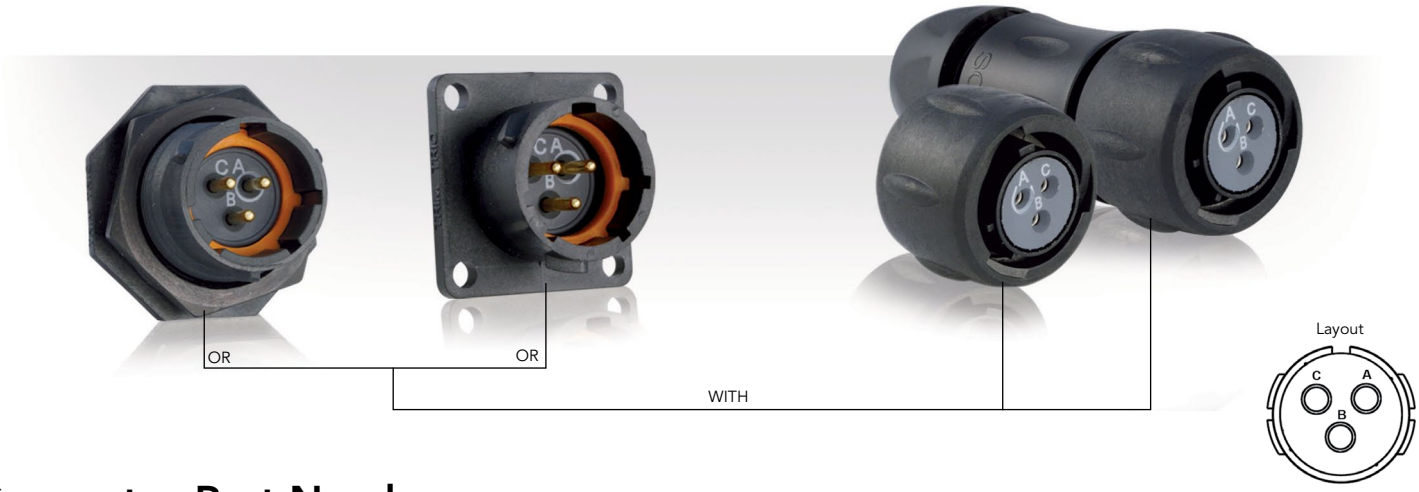


## Connector Part Numbers

| Contact type | Connector type | Backshell | Part number | |
|---|---|---|---|---|
| | | | Male insert | Female insert |
| Handsolder electrical contacts loaded see page 51 | Square flange receptacle | Without (Fig. 6) | UTS012E3P | UTS012E3S |
| | Plug | Without (Fig. 1) | UTS612E3P | UTS612E3S |
| | | Cable gland (Fig. 2) | UTS6JC12E3P | UTS6JC12E3S |
| | Jam nut receptacle | Without (Fig. 3) | UTS712E3P | UTS712E3S |
| PCB contacts loaded see page 51 | Square flange receptacle | Without (Fig. 7) | UTS012D3P | UTS012D3S |
| | Jam nut receptacle with stand off and with hold down clips | Without (Fig. 5) | UTS712D3P32 | UTS712D3S32 |
| | Jam nut receptacle with stand off and without hold down clip | Without (Fig. 4) | UTS712D3P | UTS712D3S |

Possibilities of discrimination/keying methods see page 208

Sealed unmated

## Overmoulded Cable Assembly Part Numbers

| Overmoulding type | Connector type | Wire size (mm²) | Harmonized cable part number (1) | Part number (length: 1m.)* | |
|---|---|---|---|---|---|
| | | | | Male plug | Female plug |
| Straight ending | Plug | 1.5 | H05 VV - F 3x1.5 | HAUTS0V12E3PST100 | HAUTS0V12E3SST100 |
| Right angle ending | Plug | 1.5 | H05 VV - F 3x1.5 | HAUTS0V12E3PRA100 | HAUTS0V12E3SRA100 |

(1) Other cable available on demand

* Other lengths available on demand

# 12E3/12D3 (Shell size 12, 3x#16)

## Dimensions

### Plug - UTS6

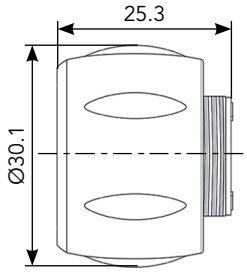


Fig. 1

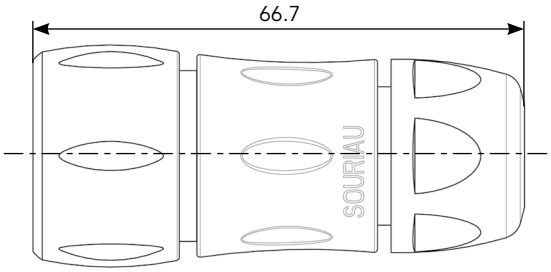


Fig. 2

### Jam Nut Receptacle - UTS7

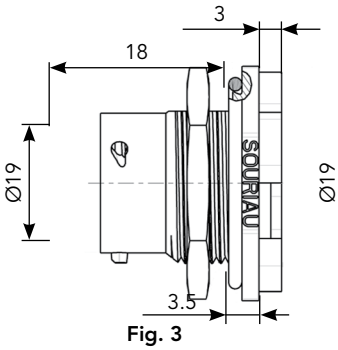


Fig. 3

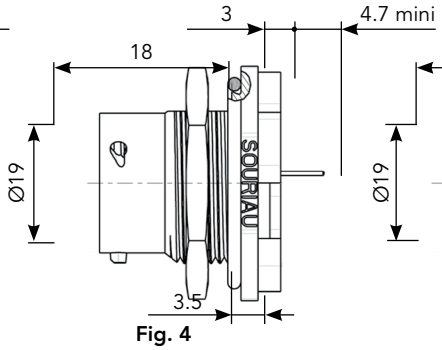


Fig. 4

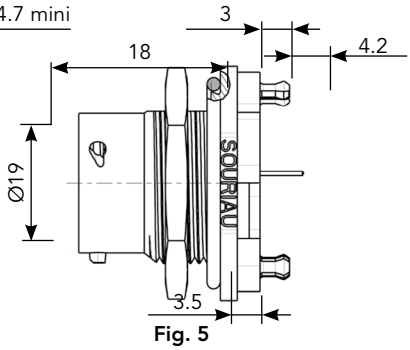


Fig. 5

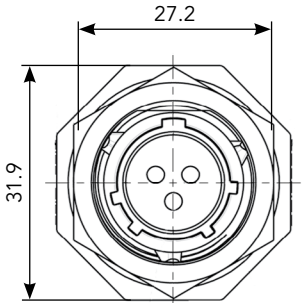


Front view

### Square Flange Receptacle - UTS0

Fig. 7

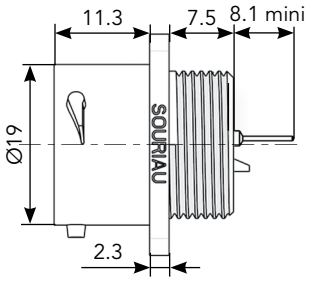


Fig. 6

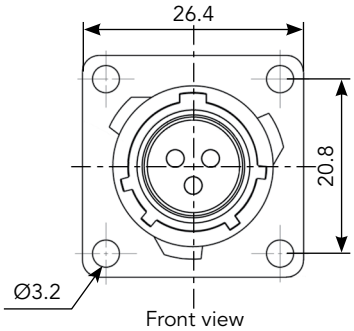


Front view

### Mated Connector Lengths

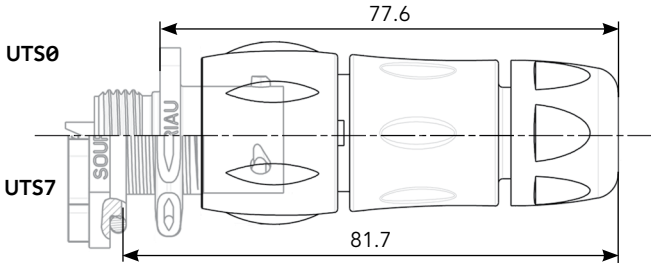


### Panel Cut Out

Square Flange Receptacle - UTS0

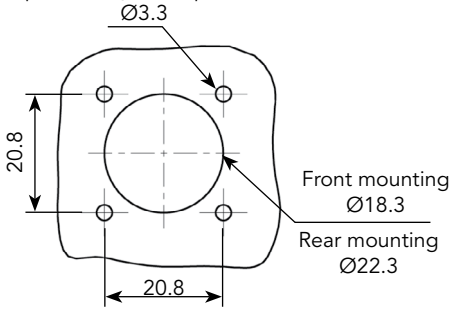


Jam Nut Receptacle - UTS7

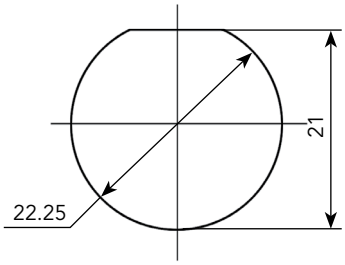


### Drilling Pattern

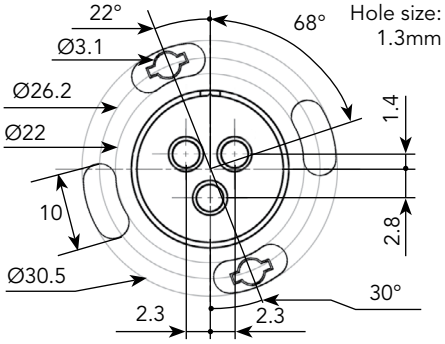


Note: Overmoulded cable assembly dimensions available page 179.

Note: all dimensions are in mm

# 12E3/12D3 (Shell size 12, 3x#16)

## Accessories

### Jam Nut Sealing Caps

IP68/69K

| Part number |
|---|
| UTS12DCG |

IP68/69K Metal terminal

| Part number |
|---|
| UTS12DCGR |

### Plug Sealing Cap

IP68/69K

| Part number |
|---|
| UTS612DCG |

### Square Flange Sealing Cap

IP68/69K Metal terminal

| Part number |
|---|
| UTS12DCGE |

### Plastic Protective Cap

| Part numbers | |
|---|---|
| Receptacle cap | Plug cap |
| 85005587A | 85005596 |

### Gasket

| Part numbers |
|---|
| UTFD13B |

### Color Coding Rings

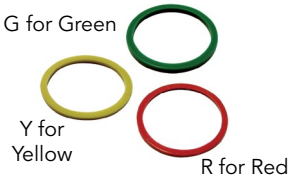


| Part numbers | |
|---|---|
| Receptacles | Plugs |
| UTS712CCRR | UTS612CCRR |
| UTS712CCRY | UTS612CCRY |
| UTS712CCRG | UTS612CCRG |

# 12E3/12D3 (Shell size 12, 3x#16)

## Contacts

| #16 | Contact type | Plating | Cable acceptance (AWG) | Wire stripping length |
|---|---|---|---|---|
| Handsolder | Loaded in the connector | Min 0.4µ gold over 0.8µ Ni | 18 to 14 | 5 mm |
| PCB | Machined (1) | Min 0.4µ gold over 0.8µ Ni | - | - |

(1): For dimensions see page 169

## Electrical Characteristics

**UL**
13A 600V UL94 HB

**CSA**
13A 600V UL94 HB

**IEC**
16A 150V 2.5kV 3

## UTS 12E3/12D3 Derating Curves

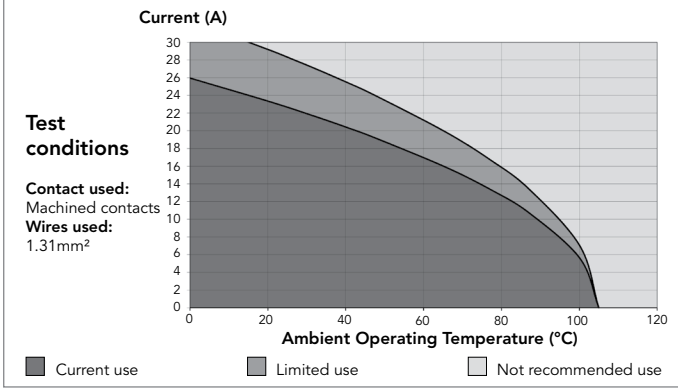

## 124 - 12E4/12D4 (Shell size 12, 3 + ground, 4x#16)

## Connector Part Numbers

| Contact type | Connector type | Backshell | Part number | |
|---|---|---|---|---|
| | | | Male insert | Female insert |
| Crimp contacts supplied separately see page 55 | Square flange receptacle | Without (Fig. 1) | UTS0124P | - |
| | Jam nut receptacle | Without (Fig. 4) | UTS7124P | UTS7124S |
| | Free hanging receptacle | Cable gland (Fig. 12) | UTS1JC124P | UTS1JC124S |
| | Plug | Without (Fig. 10) | UTS6124P | UTS6124S |
| | | Cable gland (Fig. 11) | UTS6JC124P | UTS6JC124S |
| Screw contacts loaded | Jam nut receptacle | Without (Fig. 6 & 7) | UTS7124PSCR | UTS7124SSCR |
| | Plug | Without (Fig. 10) | UTS6124PSCR | UTS6124SSCR |
| | | Cable gland (Fig. 11) | UTS6JC124PSCR | UTS6JC124SSCR |
| | Free hanging receptacle | Cable gland (Fig. 9) | UTS1JC124PSCR | - |
| PCB contacts supplied separately see page 55 | Square flange receptacle | Without (Fig. 3) | UTS0124P | - |
| | Jam nut receptacle | Without (Fig. 5) | UTS7124P | UTS7124S |
| Handsolder electrical contacts loaded see page 55 | Square flange receptacle | Without (Fig. 2) | UTS012E4P | UTS012E4S |
| | Jam nut receptacle | Without (Fig. 9) | UTS712E4P | UTS712E4S |
| | Plug | Without (Fig. 10) | UTS612E4P | UTS612E4S |
| | Plug | Cable gland (Fig. 11) | UTS6JC12E4P | UTS6JC12E4S |
| PCB contacts loaded | Square flange receptacle | Without (Fig. 3) | UTS012D4P | UTS012D4S |
| | Jam nut receptacle with stand off and without hold down clip | Without (Fig.8) | UTS712D4P | UTS712D4S |
| | Jam nut receptacle with stand off and with hold down clips | Without (Fig. 9) | UTS712D4P32 | UTS712D4S32 |

Sealed unmated

## Overmoulded Cable Assembly Part Numbers

| Overmoulding type | Connector type | Wire size (mm²) | Harmonized cable part number (1) | Part number (length: 1m.)* | |
|---|---|---|---|---|---|
| | | | | Male plug | Female plug |
| Straight ending | Plug | 1.5 | H05 VV - F 4x1.5 | HAUTS0V124PST100 | HAUTS0V124SST100 |
| | | | | HAUTS0V12E4PST100 | HAUTS0V12E4SST100 |
| Right angle ending | Plug | 1.5 | H05 VV - F 4x1.5 | HAUTS0V124PRA100 | HAUTS0V124SRA100 |
| | | | | HAUTS0V12E4PRA100 | HAUTS0V12E4SRA100 |

(1) Other cable available on demand

* Other lengths available on demand

# 124 - 12E4/12D4 (Shell size 12, 3 + ground, 4x#16)

## Dimensions

### Square Flange Receptacle - UTS0

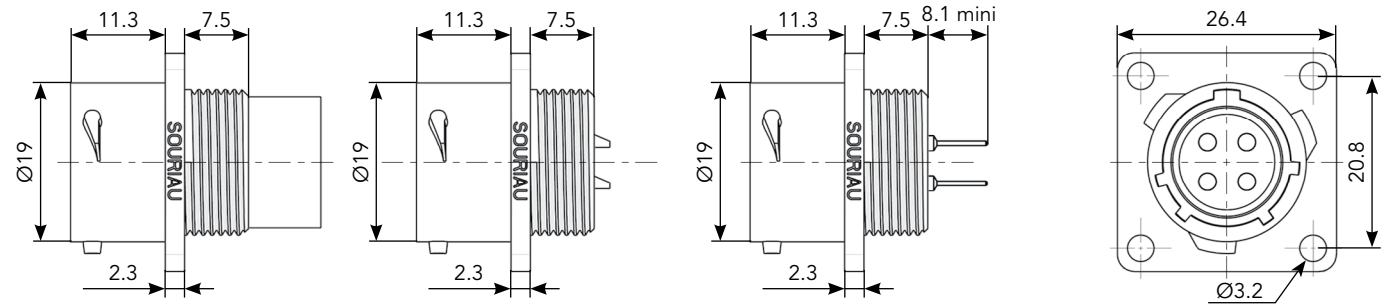


### Jam Nut Receptacle - UTS7

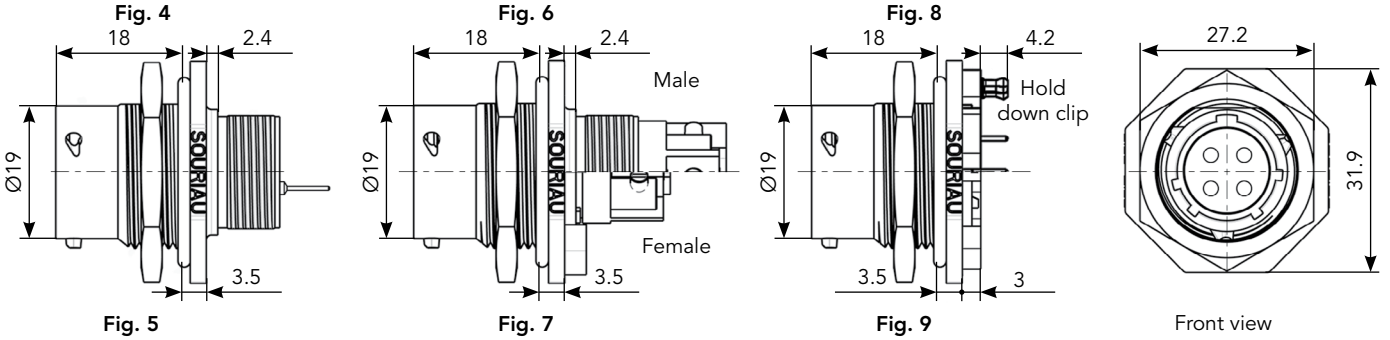


### Free Hanging - UTS1 / Plug - UTS6

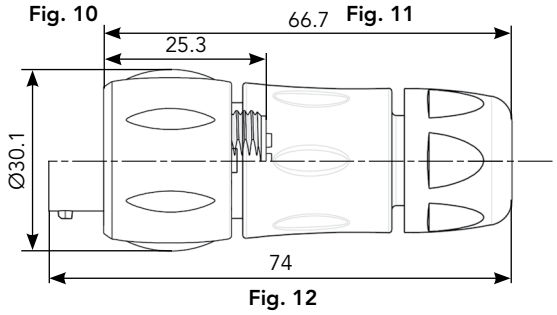


### Mated Connector Lengths

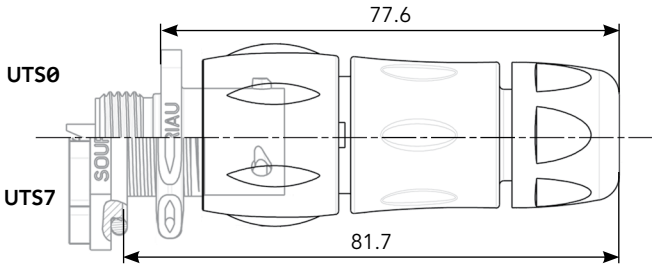


### Panel Cut Out

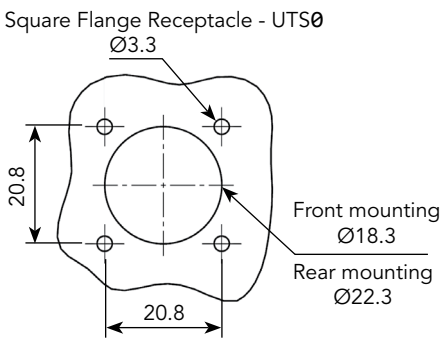


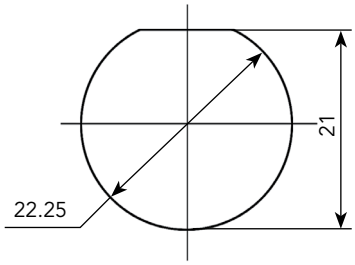


### Drilling Pattern

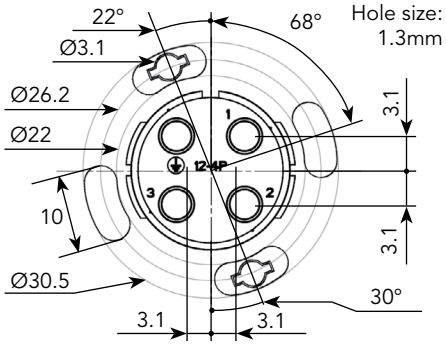


Note: Overmoulded cable assembly dimensions available page 179.

Note: all dimensions are in mm

# 124 - 12E4/12D4 (Shell size 12, 3 + ground, 4x#16)

## Accessories and Tooling

### Jam Nut Sealing Caps

IP68/69K

| Part number |
|---|
| UTS12DCG |

IP68/69K Metal terminal

| Part number |
|---|
| UTS12DCGR |

### Handle (without Head)

| Part number |
|---|
| SHANDLES |

### Tool Kit

| Part number |
|---|
| TOOLKIT |

### Plug Sealing Cap

IP68/69K

| Part number |
|---|
| UTS612DCG |

### Square Flange Sealing Cap

IP68/69K Metal terminal

| Part number |
|---|
| UTS12DCGE |

### Plastic Protective Cap

| Part numbers | |
|---|---|
| Receptacle cap | Plug cap |
| 85005587A | 85005596 |

### Gasket

| Part numbers |
|---|
| UTFD13B |

### Color Coding Rings

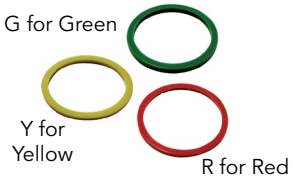


| Part numbers | |
|---|---|
| Receptacles | Plugs |
| UTS712CCRR | UTS612CCRR |
| UTS712CCRY | UTS612CCRY |
| UTS712CCRG | UTS612CCRG |

### Crimp Tooling (without Shandles)

| Contacts | Contact size | Part number of head |
|---|---|---|
| RM/RC 28M1K(1) | Standard contacts #16 Ø 1.6mm | S16RCM20* |
| RM/RC 24M9K(1) | | S16RCM20* |
| RM/RC 20M13K(1) | | S16RCM20* |
| RM/RC 20M12K(1) | | S16RCM20* |
| RM/RC 16M23K(1) | | S16RCM16* |
| RM/RC 14M30K(1) | | S16RCM14* |
| SM/SC 24ML1TK6(1) | | S16SCM20* |
| SM/SC 20ML1TK6(1) | | S16SCM20* |
| SM/SC 16ML1TK6(1) | | S16SCML1* |
| SM/SC 14ML1TK6(1) | | S16SCML1* |
| SM/SC 16ML11TK6(1) | | S16SCML11* |
| RMDXK10D28K | Coaxial contacts | M10S1J with die set & stop bushing see page 200 to 204 |
| RCDXK1D28K | | |
| RM/RC DX60xxD28K | | |
| RM/RC DXK10D28 + york090 | | |
| RM/RC DX60xxD28 | | |

(1): Example of plating, for other plating options see page 164
* Heads to be used with handle PN: SHANDLES

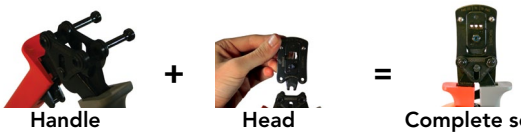

# 124 - 12E4/12D4 (Shell size 12, 3 + ground, 4x#16)

## Contacts

| #16 | Contact type | AWG | Part number | | Max wire Ø | Max insulator Ø |
|---|---|---|---|---|---|---|
| | | | Male | Female | | |
| Crimp | Machined | 30-28 | RM28M1K(1) | RC28M1K(1) | 0.55 | 1.00 |
| | | 26-24 | RM24M9K(1) | RC24M9K(1) | 0.80 | 1.60 |
| | | 22-20 | RM20M13K(1) | RC20M13K(1) | 1.15 | 1.80 |
| | | 22-20 | RM20M12K(1) | RC20M12K(1) | 1.15 | 2.20 |
| | | 20-16 | RM16M23K(1) | RC16M23K(1) | 1.80 | 3.20 |
| | | 16-14 | RM14M30K(1) | RC14M30K(1) | 2.30 | 3.20 |
| | Stamped & Formed reeled contacts<br>See note (2) for loose piece | 26-24 | SM24M1TK6(1)(2) | SC24M1TK6(1)(2) | - | 0.90-1.60 |
| | | 22-20 | SM20M1TK6(1)(2) | SC20M1TK6(1)(2) | - | 1.20-2.10 |
| | | 18-16 | SM16M1TK6(1)(2) | SC16M1TK6(1)(2) | - | 3.20 |
| | | 18-16 | SM16M11TK6(1)(2) | SC16M11TK6(1)(2) | - | 3.00 |
| | | 14 | SM14M1TK6(1)(2) | SC14M1TK6(1)(2) | - | 3.20 |
| PCB | Machined (3) | - | RM20M12E83K(1) | RC20M12E84K(1) | - | - |
| Coaxial | Cable Multipiece | see pages 167, 200 to 206 | RMDXK10D28 | RCDXK1D28 | - | - |
| | Cable Monocrimp | | RMDX60xxD28 | RCDX60xxD28 | - | - |
| | Twisted pair Multipiece | | RMDXK10D28 + york090 | RCDXK1D28 + york090 | - | - |
| | Twisted pair Monocrimp | | RMDX60xxD28 | RCDX60xxD28 | - | - |
| Fiber optic | POF contacts<br>(Plastic Optical Fiber) | - | RMPOF1000 | RCPOF1000B | - | - |
| Hand-solder | Loaded in the connector | 14-18 | - | - | | |

(1): Example of plating, for other plating see page 164 (2): Loose piece contact available if putting L. Example: SM20ML1TK6 (3): For dimensions see page 168 Note: all dimensions are in mm

## Electrical Characteristics

**UL**
10A 500V UL94 V-0

**CSA**
7A 500V UL94 V-0

**IEC**
16A 300V 4kV 3
Temperature elevation: 50°C

## UTS 124 - 12E4/12D4 Derating Curves

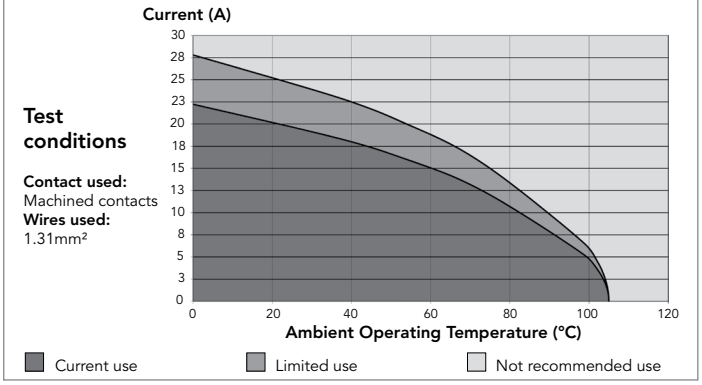

## 183G1 (Shell size 18, 3 + ground, 4x#8)

Layout

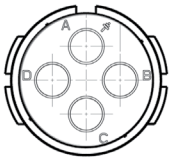


## Connector Part Numbers

| Contact type | Connector type | Backshell | Part number | |
|---|---|---|---|---|
| | | | Male insert | Female insert |
| Crimp contacts supplied separately see page 59 | NPT threaded receptacle | Without (Fig. 1) | - | UTS7183G1SNPT |
| | Plug | Without (Fig. 2) | UTS6183G1P | - |
| | Plug | Cable gland (Fig. 3) | UTS6JC183G1P | - |
| PCB contacts supplied separately see page 59 | NPT threaded receptacle | Without (Fig. 1) | - | UTS7183G1SNPT |
| | Plug | Without (Fig. 2) | UTS6183G1P | - |

## 183G1 (Shell size 18, 3 + ground, 4x#8)

# Dimensions

### NPT Threaded Receptacle - UTS7

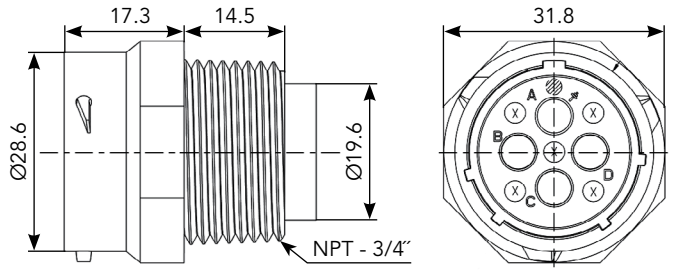


Fig. 1

### Plug - UTS6

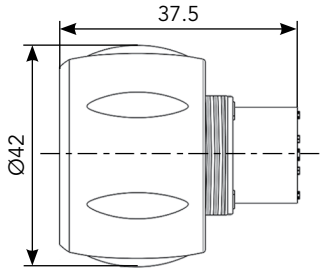


Fig. 2

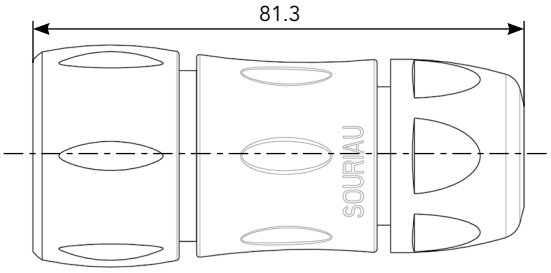


Fig. 3

### Mated Connector Length - UTS6JC

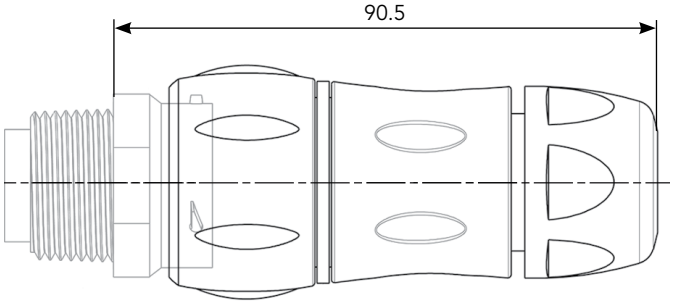


### Panel cut

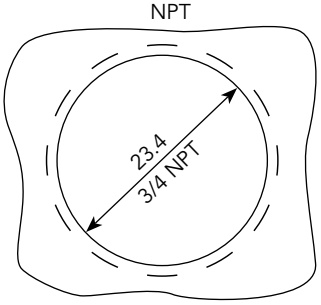


### Drilling Pattern

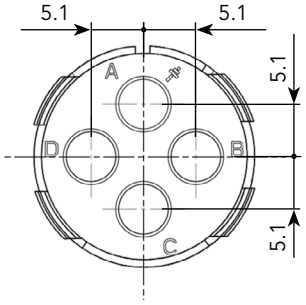


Note: all dimensions are in mm

## 183G1 (Shell size 18, 3 + ground, 4x#8)

# Accessories and Tooling

### Jam Nut or NPT Threaded Receptacle Sealing Caps

IP68/69K

| Part number |
|---|
| UTS18DCG |

IP68/69K Metal terminal

| Part number |
|---|
| UTS18DCGR |

### Hand Tool

| Part number |
|---|
| M317 |

### Plug Sealing Cap

IP68/69K

| Part number |
|---|
| UTS618DCG |

### Positioner + Locator Setting #8

| Part number |
|---|
| VGE10078A |

### Plastic Protective Cap

| Part numbers | |
|---|---|
| Receptacle cap | Plug cap |
| 85005590A | 85005599 |

### Gasket

| Part numbers |
|---|
| UTFD16B |

### Extraction Tool #8

| Part number |
|---|
| 51060210936 |

### Color Coding Rings

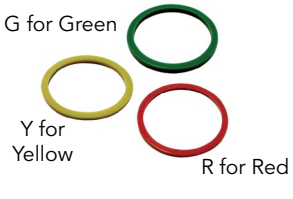


| Part numbers | |
|---|---|
| Receptacles | Plugs |
| UTS718CCRR | UTS618CCRR |
| UTS718CCRY | UTS618CCRY |
| UTS718CCRG | UTS618CCRG |

## 183G1 (Shell size 18, 3 + ground, 4x#8)

# Contacts

| #8 | Contact type | AWG | Part number | | Max wire Ø | Max insulator Ø |
|---|---|---|---|---|---|---|
| | | | Male | Female | | |
| Crimp | Machined | 16 | 82913601A(1) | 82913600A(1) | 1.72 mm | 6.5 mm |
| | | 14 | 82913603A(1) | 82913602A(1) | 2.22 mm | |
| | | 12 | 82913605A(1) | 82913604A(1) | 2.82 mm | |
| | | 10 | 82913607A(1) | 82913606A(1) | 3.50 mm | |
| | | 8 | 82913609A(1) | 82913608A(1) | 4.35 mm | |
| PCB | Machined (2) | - | 82911685NPC(1) | 82911684NPC(1) | - | - |

(1): Example of plating, for other plating see page 164
(2): For dimensions see page 168



## Electrical Characteristics

**UL**
44A 600V UL94 V-0

**CSA**
26A 600V UL94 V-0

**IEC**
32A 300V 4kV 3

## UTS 183G1 Derating Curves

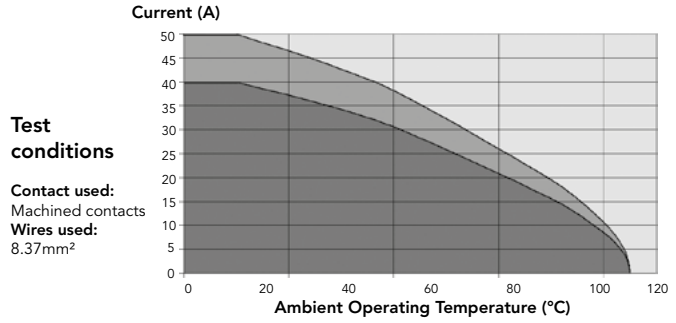


**Test conditions**

**Contact used:**
Machined contacts
**Wires used:**
8.37mm²

Current use | Limited use | Not recommended use

## 8E4/8D4 (Shell size 8, 4x#20)

## Connector Part Numbers

| Contact type | Connector type | Backshell | Part number | |
|---|---|---|---|---|
| | | | Male insert | Female insert |
| Handsolder electrical contacts loaded see page 63 | Square flange receptacle | Without (Fig. 1) | UTS08E4P | UTS08E4S |
| | Plug | Without (Fig. 7) | UTS68E4P | UTS68E4S |
| | | Cable gland (Fig. 8) | UTS6JC8E4P | UTS6JC8E4S |
| | Jam nut receptacle | Without (Fig. 4) | UTS78E4P | UTS78E4S |
| | M12 threaded receptacle | Without (Fig. 3) | UTS78E4PM12 | UTS78E4SM12 |
| PCB contacts loaded see page 63 | Square flange receptacle | Without (Fig. 2) | UTS08D4P | UTS08D4S |
| | Jam nut receptacle with stand off and with hold down clips | Without (Fig. 6) | UTS78D4P32 | UTS78D4S32 |
| | Jam nut receptacle with stand off and without hold down clip | Without (Fig. 5) | UTS78D4P | UTS78D4S |

Possibilities of discrimination/keying methods see page 208

Sealed unmated

## Overmoulded Cable Assembly Part Numbers

| Overmoulding type | Connector type | Wire size (mm²) | Harmonized cable part number (1) | Part number (length: 1m.)* | |
|---|---|---|---|---|---|
| | | | | Male plug | Female plug |
| Straight ending | Plug | 1.5 | H05 VV - F 4x1.5 | HAUTS0V8E4PST100 | HAUTS0V8E4SST100 |
| Right angle ending | Plug | 1.5 | H05 VV - F 4x1.5 | HAUTS0V8E4PRA100 | HAUTS0V8E4SRA100 |

(1) Other cable available on demand

* Other lengths available on demand

# 8E4/8D4 (Shell size 8, 4x#20)

## Dimensions

### Square Flange Receptacle - UTS0

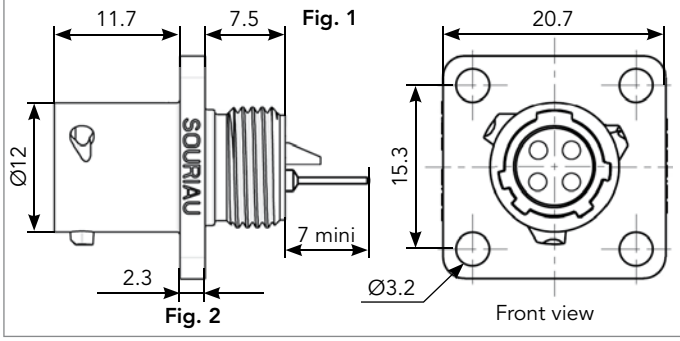


### M12 Threaded Receptacle - UTS7

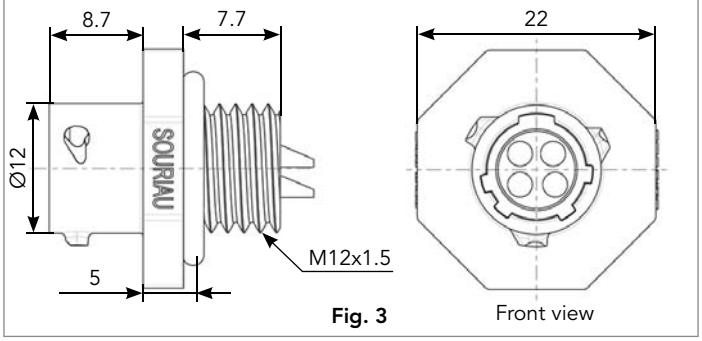


### Jam Nut Receptacle - UTS7

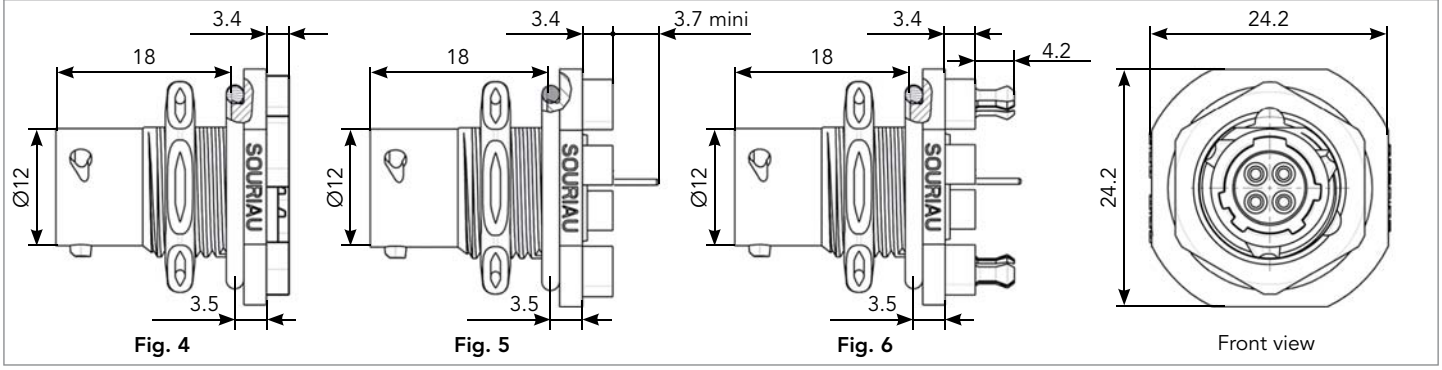


### Plug - UTS6

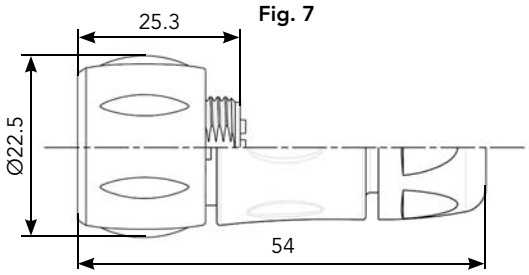


### Mated Connector Lengths

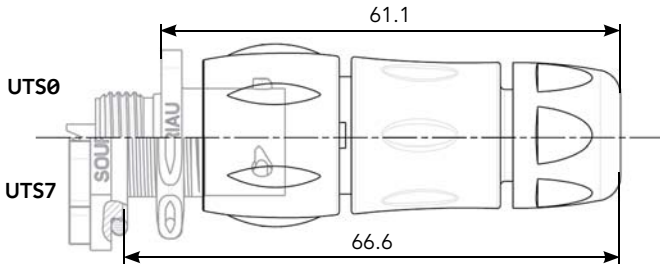


### Panel Cut Out

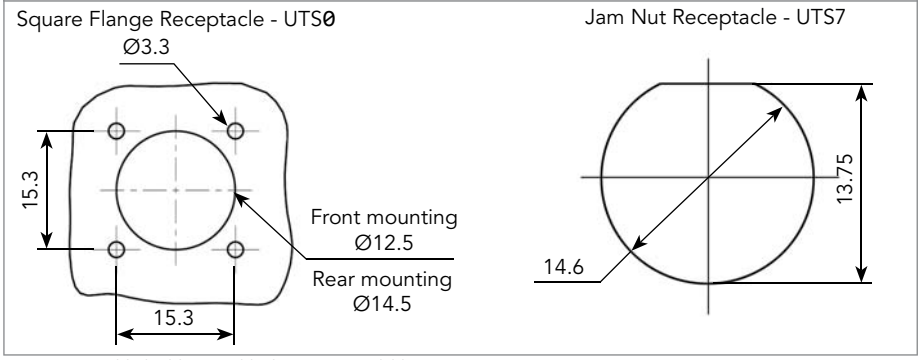


### Drilling Pattern

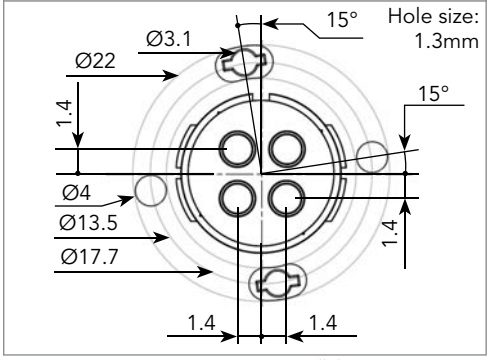


Note: Overmoulded cable assembly dimensions available page 179.

Note: all dimensions are in mm

# 8E4/8D4 (Shell size 8, 4x#20)

## Accessories

### Jam Nut Sealing Caps

IP68/69K

| Part number |
|---|
| UTS8DCG |

IP68/69K Metal terminal

| Part number |
|---|
| UTS8DCGR |

### Square Flange Sealing Cap

IP68/69K Metal terminal

| Part number |
|---|
| UTS8DCGE |

### Plug Protective Cap

IP40

| Part number |
|---|
| UTS68C |

### Plastic Protective Cap

| Part numbers | |
|---|---|
| Receptacle cap | Plug cap |
| 85005585A | 85005594 |

### Gasket

| Part numbers |
|---|
| UTFD11B |

### Color Coding Rings

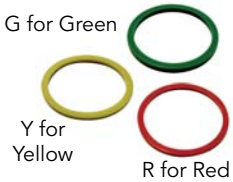


| Part numbers | |
|---|---|
| Receptacles | Plugs |
| UTS78CCRR | UTS68CCRR |
| UTS78CCRY | UTS68CCRY |
| UTS78CCRG | UTS68CCRG |

# 8E4/8D4 (Shell size 8, 4x#20)

## Contacts

| #20 | Contact type | Plating | Cable acceptance (AWG) | Wire stripping length |
|---|---|---|---|---|
| Handsolder | Loaded in the connector | Min 0.4µ gold over 0.8µ Ni | 22 to 18 | 5 mm |
| PCB | Machined (1) | Min 0.4µ gold over 0.8µ Ni | - | - |

(1): For dimensions see page 169



## Electrical Characteristics

**UL**
7A 250V UL94 HB

**CSA**
7A 250V UL94 HB

**IEC**
7A 32V 1.5kV 3

## UTS 8E4/8D4 Derating Curves

**Test conditions**

**Contact used:**
Machined contacts
**Wires used:**
0.518mm²

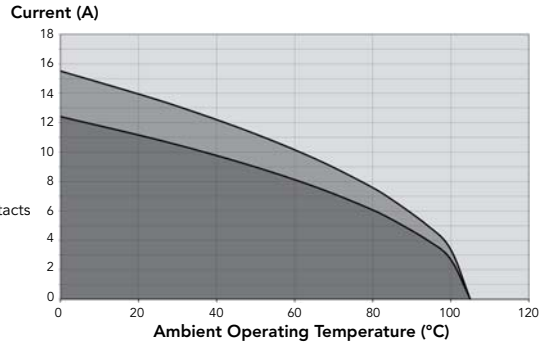


Current use | Limited use | Not recommended use

## 102W2 (Shell size 10, 2x#20, 2x12)

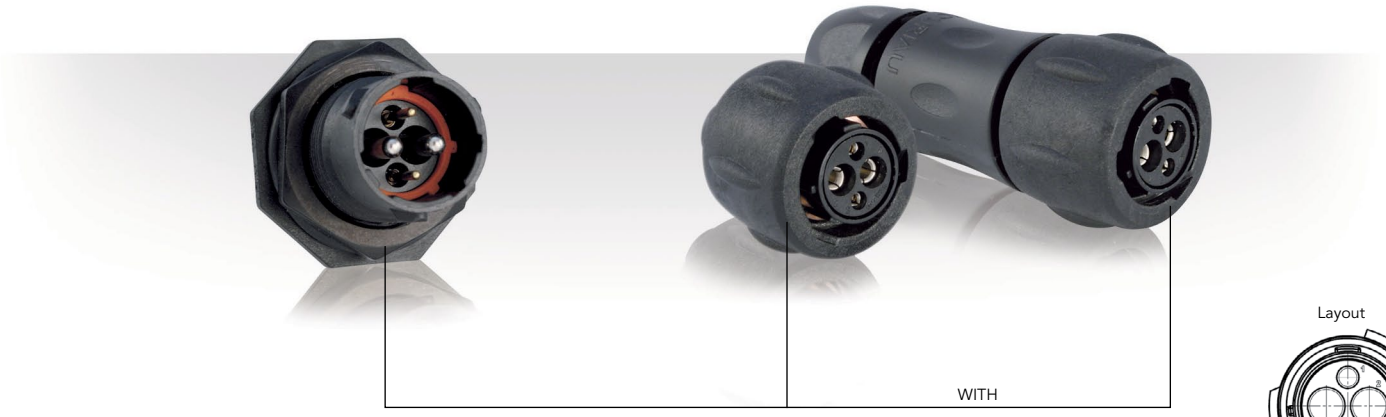


Layout

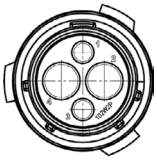

## Connector Part Numbers

| Contact type | Connector type | Backshell | Part number | |
|---|---|---|---|---|
| | | | Male insert | Female insert |
| Crimp contacts supplied separately see page 67 | Free hanging receptacle | Cable gland (Fig. 1) | **UTS1JC102W2P** | **UTS1JC102W2S** |
| | Plug | Without (Fig. 2) | **UTS6102W2P** | **UTS6102W2S** |
| | Plug | Cable gland (Fig. 3) | **UTS6JC102W2P** | **UTS6JC102W2S** |
| | Jam nut receptacle | Without (Fig. 4) | **UTS7102W2P** | **UTS7102W2S** |

# 102W2 (Shell size 10, 2x#20, 2x12)

## Dimensions

### Free Hanging - UTS1

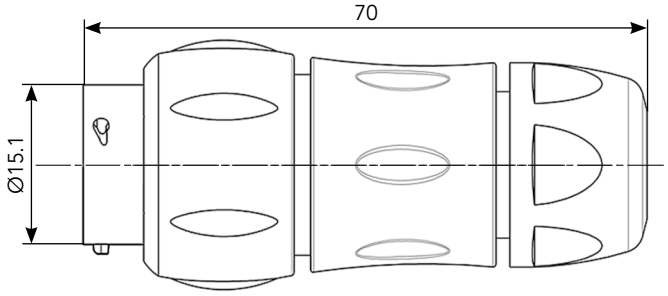


**Fig. 1**

### Plug - UTS6

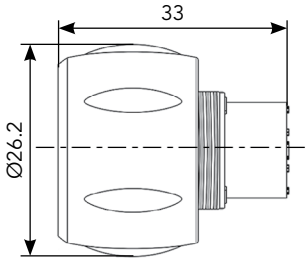


**Fig. 2** Male

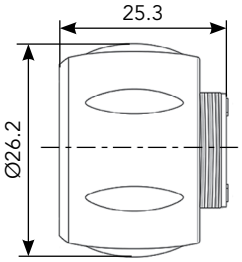


**Fig. 2** Female

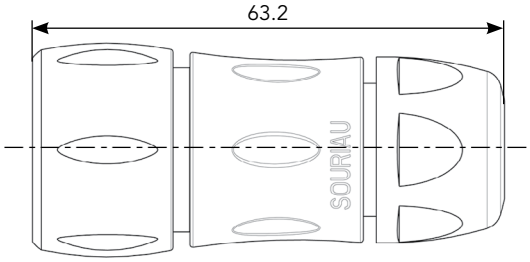


**Fig. 3**

### Jam Nut Receptacle - UTS7

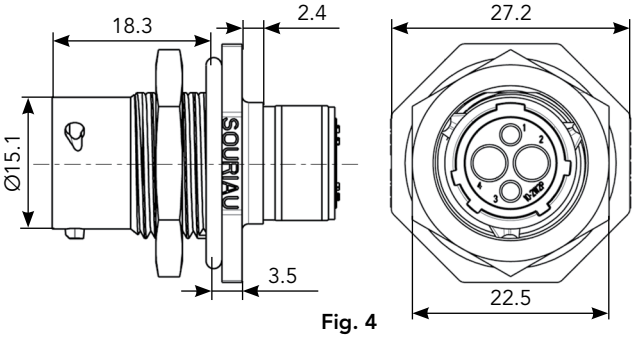


**Fig. 4**

### Mated Connector Length - UTS7

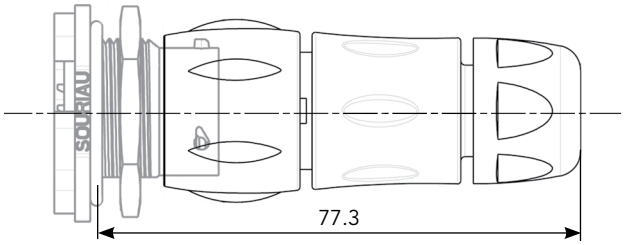


### Panel Cut Out

Jam Nut Receptacle - UTS7

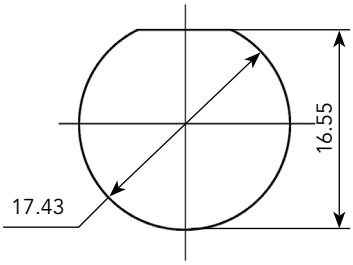


### Drilling Pattern

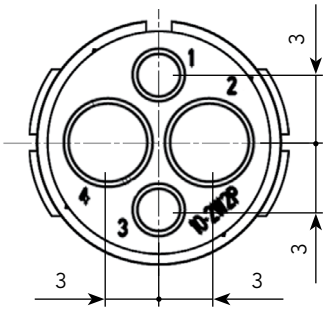


Note: all dimensions are in mm

# 102W2 (Shell size 10, 2x#20, 2x12)

## Accessories and Tooling

### Jam Nut Sealing Caps

IP68/69K

| Part number |
|---|
| UTS10DCG |

IP68/69K Metal terminal

| Part number |
|---|
| UTS10DCGR |

### Plug Sealing Cap

IP68/69K

| Part number |
|---|
| UTS610DCG |

### Extraction Tool #20

| Part number |
|---|
| RX20D44 |

### Plastic Protective Cap

| Part numbers | |
|---|---|
| Receptacle cap | Plug cap |
| 85005586A | 85005595 |

### Gasket

| Part numbers |
|---|
| UTFD12B |

### Color Coding Rings

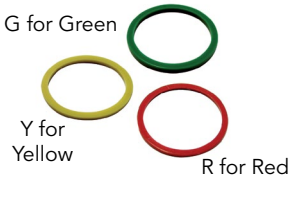


| Part numbers | |
|---|---|
| Receptacles | Plugs |
| UTS710CCRR | UTS610CCRR |
| UTS710CCRY | UTS610CCRY |
| UTS710CCRG | UTS610CCRG |

### Crimp Tooling #20

| Part number |
|---|
| SHANDLES |

| Part number |
|---|
| TOOLKIT |

| Contacts | Contact size | Part number of head |
|---|---|---|
| RM/RC 24W3K(1) | Standard contacts<br>#20<br>Ø 1mm | S20RCM* |
| RM/RC 20W3K(1) | | S20RCM* |
| RM/RC 18W3K(1) | | S20RCM* |
| SM/SC 24WL3(1)(2) | | S20SCM20* |
| SM/SC 20WL3(1)(2) | | S20SCM20* |

(1): Example of plating, for other plating options see page 156
(2): loose contact
* Heads to be used with handle PN: SHANDLES

Handle

+

Head

=

Complete set

### Crimp Tooling #12

| Part number hand tool |
|---|
| M317 |

| Part number positioner + locator setting |
|---|
| VGE10078A |

### Extraction Tool #12

| Part number extraction tool |
|---|
| 51060210924 |

# 102W2 (Shell size 10, 2x#20, 2x12)

## Contacts

| #20 | Contact type | AWG | Part number | | Max wire Ø | Max insulator Ø |
|---|---|---|---|---|---|---|
| | | | Male | Female | | |
| Crimp | Machined | 26-24 | RM24W3K | RC24W3K | 0.80 | 1.60 |
| | | 22-20 | RM20W3K | RC20W3K | 1.15 | 1.60 |
| | | 20-18 | RM18W3K | RC18W3K | 1.30 | 2.10 |
| | Stamped & Formed reeled contacts<br>See note (2) for loose piece | 26-24 | SM24W3TK6(1)(2) | SC24W3TK6(1)(2) | - | 0.90-1.60 |
| | | 26-24 | SM24W3S26(1)(2) | SC24W3S25(1)(2) | - | 0.90-1.60 |
| | | 22-20 | SM20W3TK6(1)(2) | SC20W3TK6(1)(2) | - | 1.20-2.10 |
| | | 22-20 | SM20W3S26(1)(2) | SC20W3S25(1)(2) | - | 1.20-2.10 |
| #12 | | | | | | |
| Crimp | Machined | 22 | 82911457NA | 82911456A | 0.87 | 4.90 |
| | | 20 | 82911459NA | 82911458A | 1.12 | |
| | | 18 | 82911461NA | 82911460A | 1.42 | |
| | | 16 | 82911463NA | 82911462A | 1.72 | |
| | | 14 | 82911465NA | 82911464A | 2.22 | |
| | | 12 | 82911467NA | 82911466A | 2.82 | |

(1): Example of plating, for other plating see page 164 (2): Loose piece contact available if putting L. Example: SM20WL3TK6

Note: all dimensions are in mm

4

## Electrical Characteristics

**UL**
20A 500V UL94 V-0

**CSA**
18A 500V UL94 V-0

**IEC**
25A 150V 2.5kV 3
Temperature elevation: 50°C

## UTS 102W2 Derating Curves

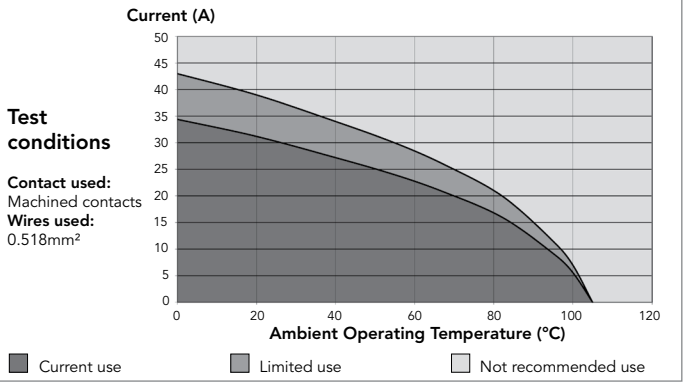

## 104 (Shell size 10, 4x#16)

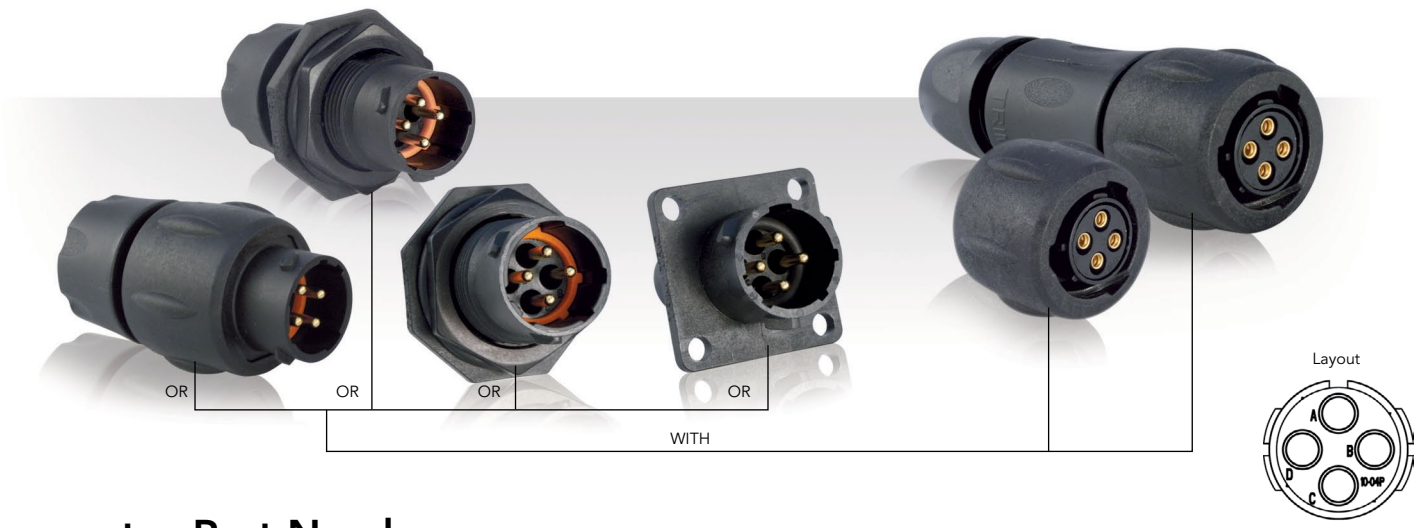


# Connector Part Numbers

| Contact type | Connector type | Backshell | Part number | |
|---|---|---|---|---|
| | | | Male insert | Female insert |
| Crimp Contact supplied separately see page 71 | Square flange receptacle | Without (Fig. 1) | UTS0104P | UTS0104S |
| | Free hanging receptacle | Cable gland and grommet (Fig. 2) | UTS1GJC104P | - |
| | Free hanging receptacle | Nut and grommet (Fig. 3) | UTS1GN104P | - |
| | Free hanging receptacle | Cable gland (Fig. 2) | UTS1JC104P | UTS1JC104S |
| | Plug | Without (Fig. 4) | UTS6104P | UTS6104S |
| | Plug | Cable gland and grommet (Fig. 5) | - | UTS6GJC104S |
| | Plug | Nut and grommet (Fig. 6) | - | UTS6GN104S |
| | Plug | Cable gland (Fig. 5) | UTS6JC104P | UTS6JC104S |
| | Jam nut receptacle | Without (Fig. 7) | UTS7104P | UTS7104S |
| | Jam nut receptacle | Cable gland and grommet (Fig. 9) | UTS7GJC104P | - |
| | Jam nut receptacle | Nut and grommet (Fig. 8) | UTS7GN104P | - |
| PCB contacts supplied separately see page 71 | Jam nut receptacle | Without (Fig. 7) | UTS7104P | UTS7104S |

Possibilities of discrimination/keying methods see page 208

# Overmoulded Cable Assembly Part Numbers

| Overmoulding type | Connector type | Wire size (mm²) | Harmonized cable part number (1) | Part number (length: 1m.)* | |
|---|---|---|---|---|---|
| | | | | Male plug | Female plug |
| Straight ending | Plug | 1.5 | H05 VV - F 4x1.5 | HAUTS0V104PST100 | HAUTS0V104SST100 |
| Right angle ending | Plug | 1.5 | H05 VV - F 4x1.5 | HAUTS0V104PRA100 | HAUTS0V104SRA100 |

(1) Other cable available on demand

* Other lengths available on demand

## 104 (Shell size 10, 4x#16)

# Dimensions

### Square Flange Receptacle - UTS0

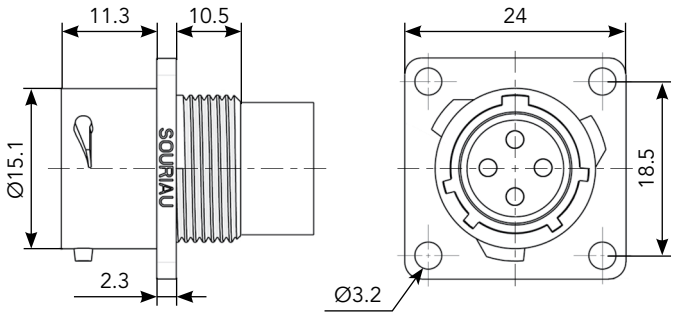


Fig. 1

### Free Hanging - UTS1

Fig. 2

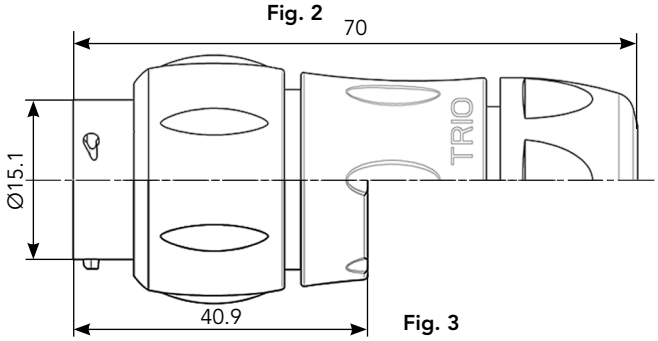


Fig. 3

### Plug - UTS6

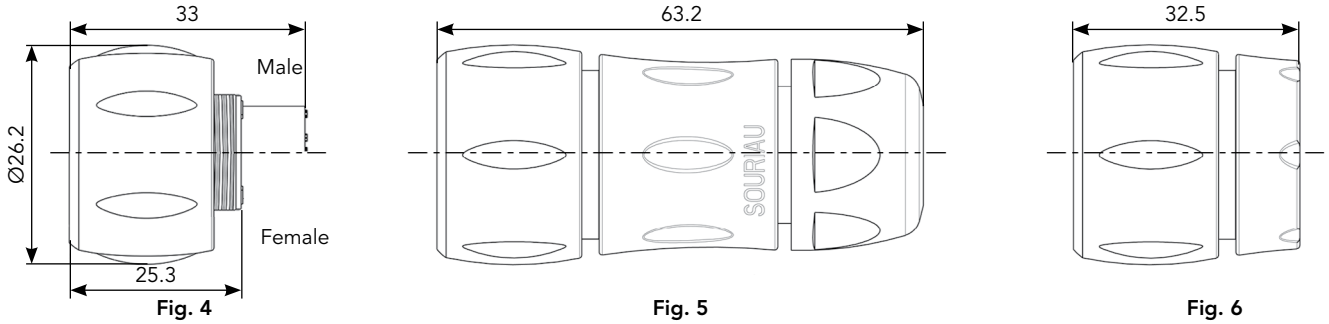


Fig. 4 Fig. 5 Fig. 6

### Jam Nut Receptacle - UTS7

Fig. 8

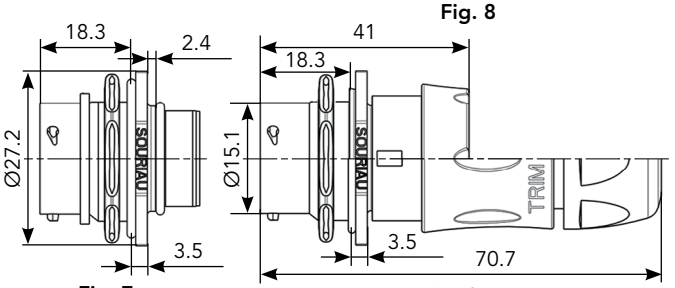


Fig. 7 Fig. 9

### Mated Connector Lengths

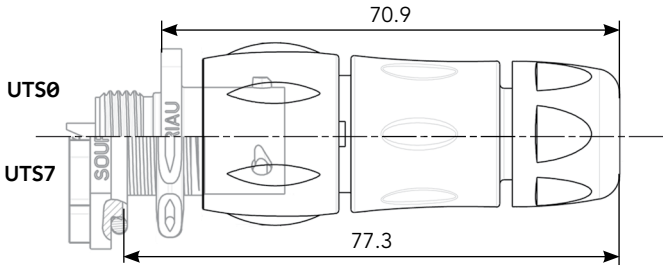


### Panel Cut Out

Square Flange Receptacle - UTS0

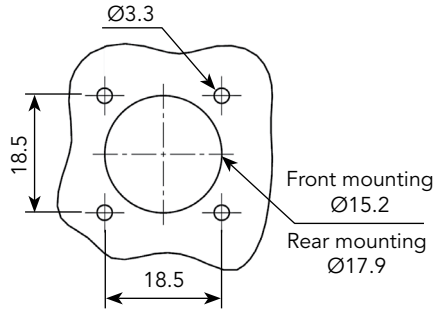


Jam Nut Receptacle - UTS7

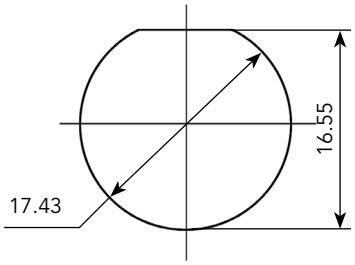


### Drilling Pattern

Hole size : 1.3mm

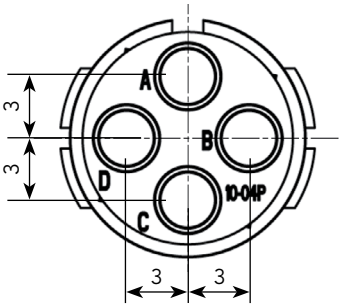


Note: Overmoulded cable assembly dimensions available page 179.

Note: all dimensions are in mm

## 104 (Shell size 10, 4x#16)

# Accessories and Tooling

### Jam Nut Sealing Caps

IP68/69K

| Part number |
|---|
| UTS10DCG |

IP68/69K Metal terminal

| Part number |
|---|
| UTS10DCGR |

### Handle (without Head)

| Part number |
|---|
| SHANDLES |

### Tool Kit

| Part number |
|---|
| TOOLKIT |

### Plug Sealing Cap

IP68/69K

| Part number |
|---|
| UTS610DCG |

### Square Flange Sealing Cap

IP68/69K Metal terminal

| Part number |
|---|
| UTS10DCGE |

### Plastic Protective Cap

| Part numbers | |
|---|---|
| Receptacle cap | Plug cap |
| 85005586A | 85005595 |

### Gasket

| Part numbers |
|---|
| UTFD12B |

### Color Coding Rings

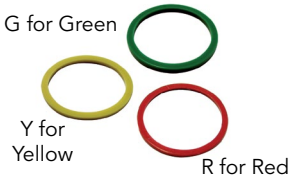


| Part numbers | |
|---|---|
| Receptacles | Plugs |
| UTS710CCRR | UTS610CCRR |
| UTS710CCRY | UTS610CCRY |
| UTS710CCRG | UTS610CCRG |

### Crimp Tooling (without Shandles)

| Contacts | Contact size | Part number of head |
|---|---|---|
| RM/RC 28M1K(1) | Standard contacts #16 Ø 1.6mm | S16RCM20* |
| RM/RC 24M9K(1) | | S16RCM20* |
| RM/RC 20M13K(1) | | S16RCM20* |
| RM/RC 20M12K(1) | | S16RCM20* |
| RM/RC 16M23K(1) | | S16RCM16* |
| RM/RC 14M30K(1) | | S16RCM14* |
| SM/SC 24ML1TK6(1) | | S16SCM20* |
| SM/SC 20ML1TK6(1) | | S16SCM20* |
| SM/SC 16ML1TK6(1) | | S16SCML1* |
| SM/SC 14ML1TK6(1) | | S16SCML1* |
| SM/SC 16ML11TK6(1) | | S16SCML11* |
| RMDXK10D28K | Coaxial contacts | M10S1J with die set & stop bushing see page 200 to 204 |
| RCDXK1D28K | | |
| RM/RC DX60xxD28K | | |
| RM/RC DXK10D28 + york090 | | |
| RM/RC DX60xxD28 | | |

(1): Example of plating, for other plating options see page 164
* Heads to be used with handle PN: SHANDLES

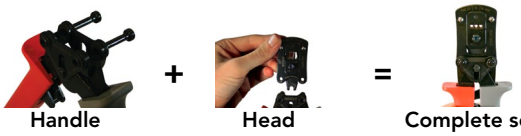


Handle Head Complete set

## 104 (Shell size 10, 4x#16)

# Contacts

| #16 | Contact type | AWG | Part number | | Max wire Ø | Max insulator Ø |
|---|---|---|---|---|---|---|
| | | | Male | Female | | |
| Crimp | Machined | 30-28 | RM28M1K(1) | RC28M1K(1) | 0.55 | 1.00 |
| | | 26-24 | RM24M9K(1) | RC24M9K(1) | 0.80 | 1.60 |
| | | 22-20 | RM20M13K(1) | RC20M13K(1) | 1.15 | 1.80 |
| | | 22-20 | RM20M12K(1) | RC20M12K(1) | 1.15 | 2.20 |
| | | 20-16 | RM16M23K(1) | RC16M23K(1) | 1.80 | 3.20 |
| | | 16-14 | RM14M30K(1) | RC14M30K(1) | 2.30 | 3.20 |
| | Stamped & Formed reeled contacts<br>See note (2) for loose piece | 26-24 | SM24M1TK6(1)(2) | SC24M1TK6(1)(2) | - | 0.90-1.60 |
| | | 22-20 | SM20M1TK6(1)(2) | SC20M1TK6(1)(2) | - | 1.20-2.10 |
| | | 18-16 | SM16M1TK6(1)(2) | SC16M1TK6(1)(2) | - | 3.20 |
| | | 18-16 | SM16M11TK6(1)(2) | SC16M11TK6(1)(2) | - | 3.00 |
| | | 14 | SM14M1TK6(1)(2) | SC14M1TK6(1)(2) | - | 3.20 |
| PCB | Machined (3) | - | RM20M12E83K(1) | RC20M12E84K(1) | - | - |
| Coaxial | Cable Multipiece | see pages 167, 200 to 206 | RMDXK10D28 | RCDXK1D28 | - | - |
| | Cable Monocrimp | | RMDX60xxD28 | RCDX60xxD28 | - | - |
| | Twisted pair Multipiece | | RMDXK10D28 + york090 | RCDXK1D28 + york090 | - | - |
| | Twisted pair Monocrimp | | RMDX60xxD28 | RCDX60xxD28 | - | - |
| Fiber optic | POF contacts<br>(Plastic Optical Fiber) | - | RMPOF1000 | RCPOF1000B | - | - |

(1): Example of plating, for other plating see page 164 (2): Loose piece contact available if putting L. Example: SM20ML1TK6 (3): For dimensions see page 168 Note: all dimensions are in mm

## Electrical Characteristics

**UL**
10A 500V UL94 V-0

**CSA**
7A 500V UL94 V-0

**IEC**
13A 150V 2.5kV 3

## UTS 104 Derating Curves

**Test conditions**

**Contact used:**
Machined contacts
**Wires used:**
1.31mm²

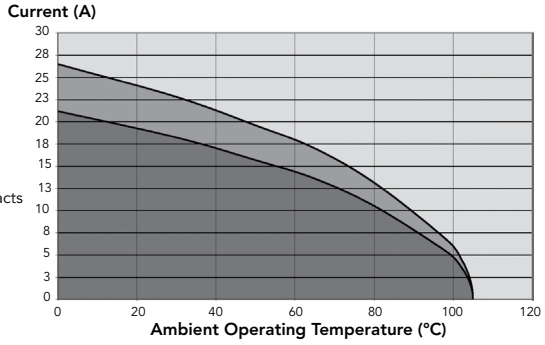


Current use | Limited use | Not recommended use

## 14E5/14D5 (Shell size 14, 5x#16)

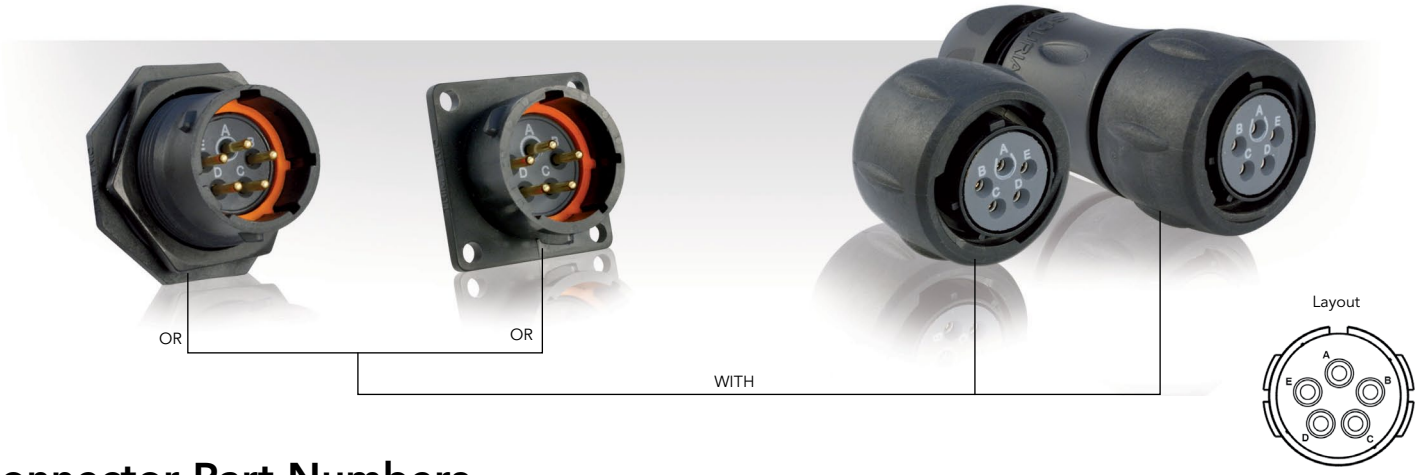


## Connector Part Numbers

| Contact type | Connector type | Backshell | Part number | |
|---|---|---|---|---|
| | | | Male insert | Female insert |
| Handsolder electrical contacts loaded see page 75 | Square flange receptacle | Without (Fig. 6) | UTS014E5P | UTS014E5S |
| | Plug | Without (Fig. 1) | UTS614E5P | UTS614E5S |
| | | Cable gland (Fig. 2) | UTS6JC14E5P | UTS6JC14E5S |
| | Jam nut receptacle | Without (Fig. 3) | UTS714E5P | UTS714E5S |
| PCB contacts loaded see page 75 | Square flange receptacle | Without (Fig. 6) | UTS014D5P | UTS014D5S |
| | Jam nut receptacle with hold down clips | Without (Fig. 4) | UTS714D5P32 | UTS714D5S32 |
| | Jam nut receptacle with stand off and without hold down clip | Without (Fig. 5) | UTS714D5P | UTS714D5S |

Possibilities of discrimination/keying methods see page 208

Sealed unmated

## Overmoulded Cable Assembly Part Numbers

| Overmoulding type | Connector type | Wire size (mm²) | Harmonized cable part number (1) | Part number (length: 1m.)* | |
|---|---|---|---|---|---|
| | | | | Male plug | Female plug |
| Straight ending | Plug | 1.5 | H05 VV - F 5x1.5 | HAUTS0V14E5PST100 | HAUTS0V14E5SST100 |
| Right angle ending | Plug | 1.5 | H05 VV - F 5x1.5 | HAUTS0V14E5PRA100 | HAUTS0V14E5SRA100 |

(1) Other cable available on demand

* Other lengths available on demand

# 14E5/14D5 (Shell size 14, 5x#16)

## Dimensions

### Plug - UTS6

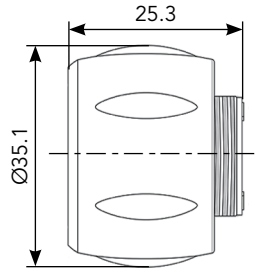


Fig. 1

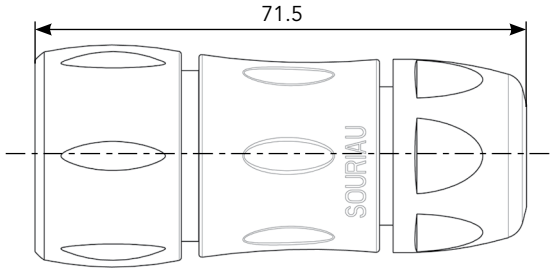


Fig. 2

### Jam Nut Receptacle - UTS7

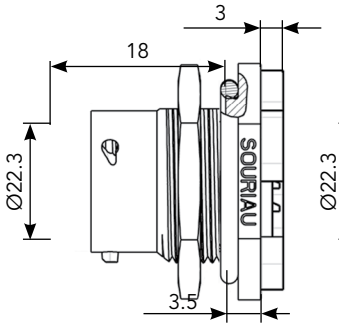


Fig. 3

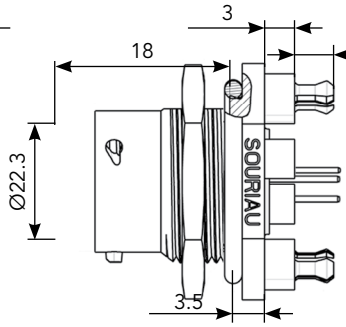


Fig. 4

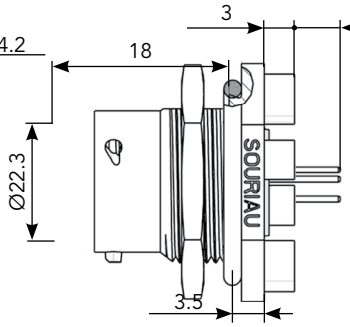


Fig. 5

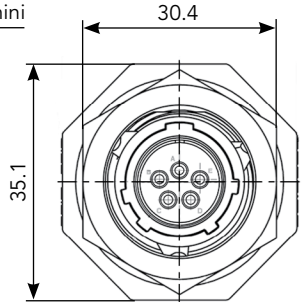


Front view

### Square Flange Receptacle - UTS0

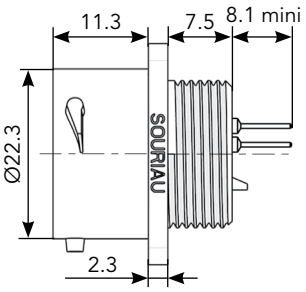


Fig. 6

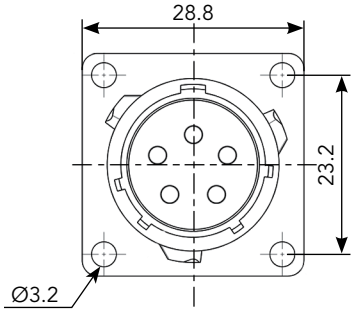


Front view

### Mated Connector Lengths

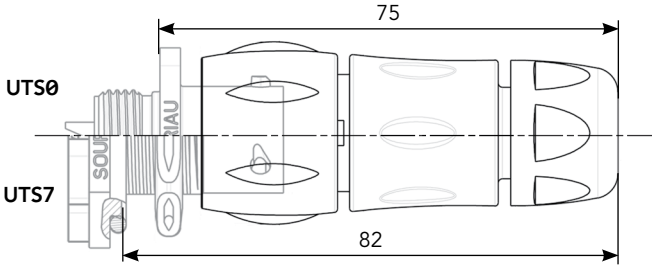


### Panel Cut Out

Square Flange Receptacle - UTS0

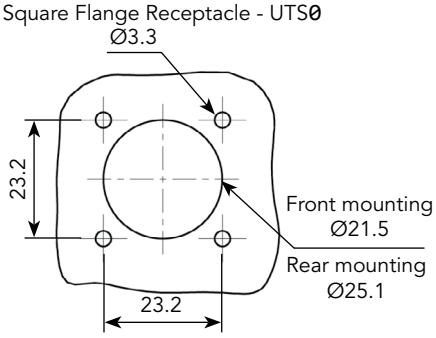


Jam Nut Receptacle - UTS7

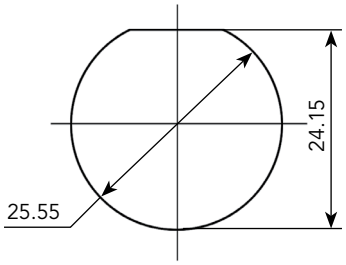


### Drilling Pattern

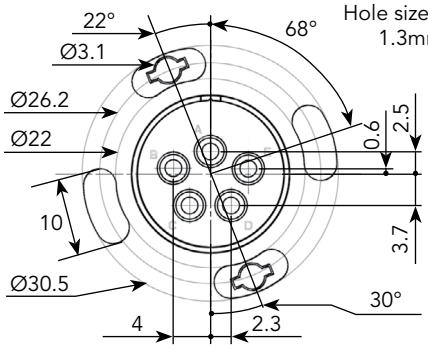


Note: Overmoulded cable assembly dimensions available page 179.

Note: all dimensions are in mm

# 14E5/14D5 (Shell size 14, 5x#16)

## Accessories and Tooling

### Jam Nut Sealing Caps

IP68/69K

| Part number |
|---|
| UTS14DCG |

IP68/69K Metal terminal

| Part number |
|---|
| UTS14DCGR |

### Plug Sealing Cap

IP68/69K

| Part number |
|---|
| UTS614DCG |

### Square Flange Sealing Cap

IP68/69K Metal terminal

| Part number |
|---|
| UTS14DCGE |

### Plastic Protective Cap

| Part numbers | |
|---|---|
| Receptacle cap | Plug cap |
| 85005588A | 85005597 |

### Gasket

| Part numbers |
|---|
| UTFD14B |

### Color Coding Rings

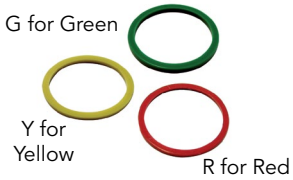


| Part numbers | |
|---|---|
| Receptacles | Plugs |
| UTS714CCRR | UTS614CCRR |
| UTS714CCRY | UTS614CCRY |
| UTS714CCRG | UTS614CCRG |

# 14E5/14D5 (Shell size 14, 5x#16)

## Contacts

| #16 | Contact type | Plating | Cable acceptance (AWG) | Wire stripping length |
|---|---|---|---|---|
| Handsolder | Loaded in the connector | Min 0.4µ gold over 0.8µ Ni | 18 to 14 | 5 mm |
| PCB | Machined (1) | Min 0.4µ gold over 0.8µ Ni | - | - |

(1): For dimensions see page 169



## Electrical Characteristics

**UL**
12A 600V UL94 HB

**CSA**
12A 600V UL94 HB

**IEC**
16A 150V 2.5kV 3

## UTS 14E5/14D5 Derating Curves

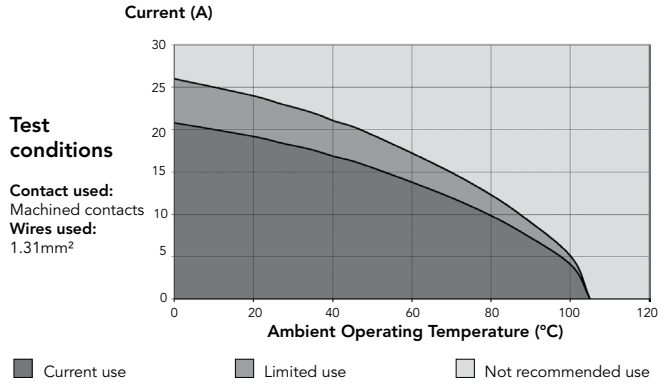

## 18X2M3 (Shell size 18, 3x#16, 2x#8)

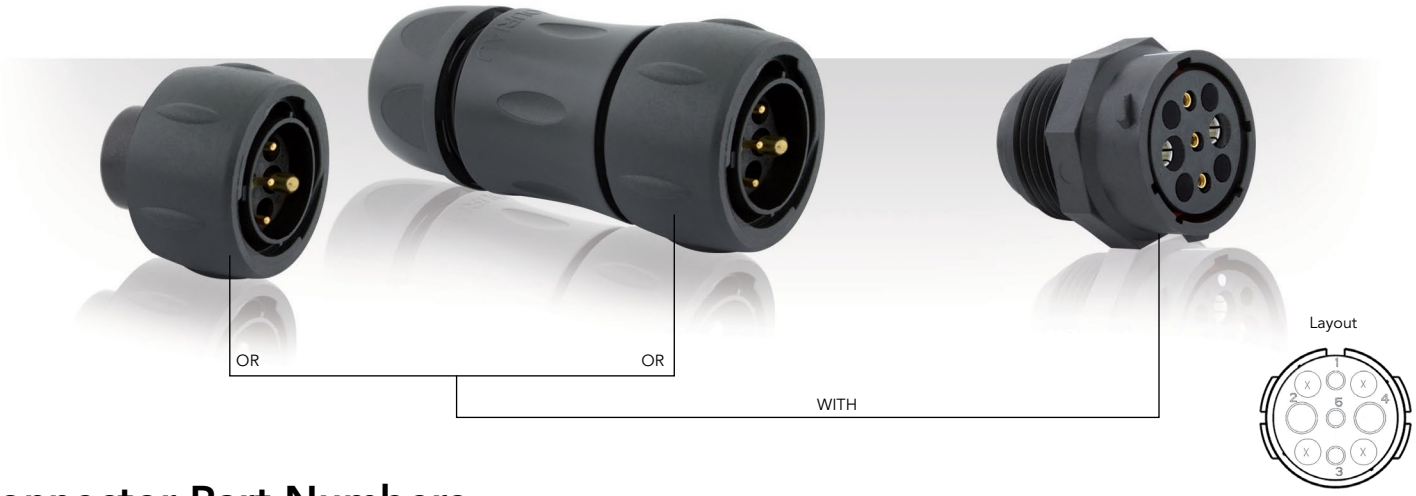


## Connector Part Numbers

| Contact type | Connector type | Backshell | Part number | |
|---|---|---|---|---|
| | | | Male insert | Female insert |
| Crimp contacts supplied separately see page 79 | NPT threaded receptacle | Without (Fig. 1) | **UTS718X2M3PNPT** | **UTS718X2M3SNPT** |
| | Plug | Without (Fig. 2) | **UTS618X2M3P** | **UTS618X2M3S** |
| | Plug | Cable gland (Fig. 3) | **UTS6JC18X2M3P** | **UTS6JC18X2M3S** |
| PCB contacts supplied separately see page 79 | NPT threaded receptacle | Without (Fig. 1) | **UTS718X2M3PNPT** | **UTS718X2M3SNPT** |

## 18X2M3 (Shell size 18, 3x#16, 2x#8)

# Dimensions

### NPT Threaded Receptacle - UTS7

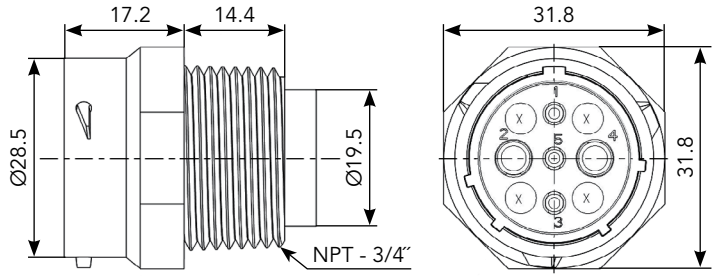


Fig. 1

### Plug - UTS6

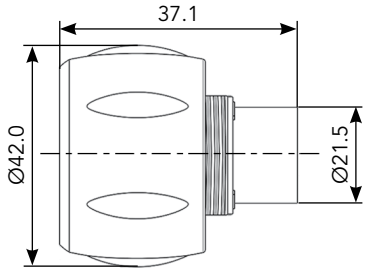


Fig. 2

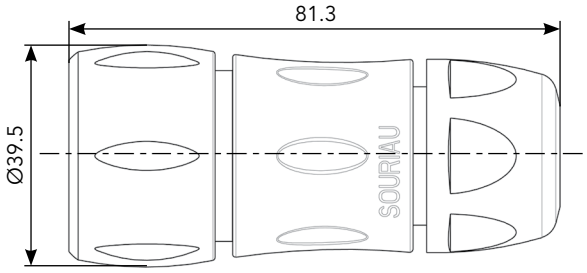


Fig. 3

### Mated Connector Length - UTS6JC

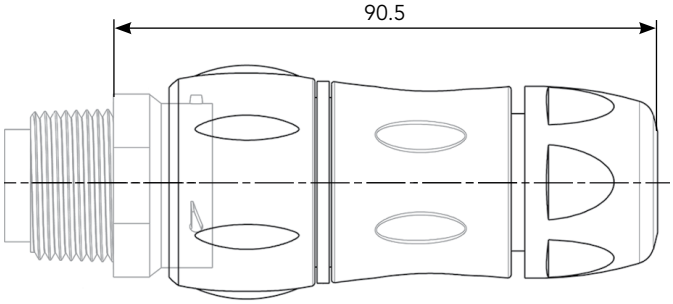


### Panel cut

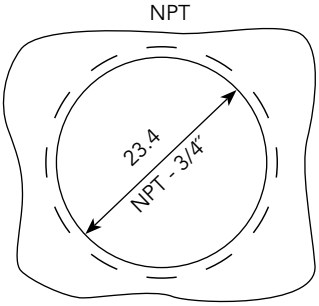


### Drilling Pattern

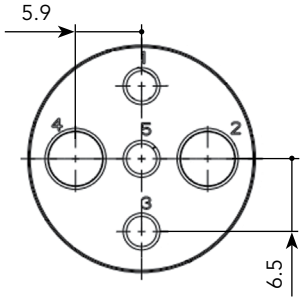


Note: all dimensions are in mm

# 18X2M3 (Shell size 18, 3x#16, 2x#8)

## Accessories and Tooling

### Jam Nut or NPT Threaded Receptacle Sealing Caps

IP68/69K

| Part number |
|---|
| UTS18DCG |

IP68/69K Metal terminal

| Part number |
|---|
| UTS18DCGR |

### Plug Sealing Cap

IP68/69K

| Part number |
|---|
| UTS618DCG |

### Extraction Tool #16

| Part number |
|---|
| RX2025GE1 |

### Plastic Protective Cap

| Part numbers | |
|---|---|
| Receptacle cap | Plug cap |
| 85005590A | 85005599 |

### Color Coding Rings

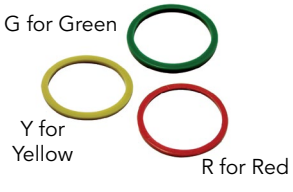


| Part numbers | |
|---|---|
| Receptacles | Plugs |
| UTS718CCRR | UTS618CCRR |
| UTS718CCRY | UTS618CCRY |
| UTS718CCRG | UTS618CCRG |

### Crimp Tooling #16

| Part number |
|---|
| SHANDLES |

| Part number |
|---|
| TOOLKIT |

| Contacts | Contact size | Part number of head |
|---|---|---|
| RM/RC 28M1K | Standard contacts #16 Ø 1.6mm | S16RCM20* |
| RM/RC 24M9K | | S16RCM20* |
| RM/RC 20M13K | | S16RCM20* |
| RM/RC 20M12K | | S16RCM20* |
| RM/RC 16M23K | | S16RCM16* |
| RM/RC 14M30K | | S16RCM14* |
| SM/SC 24ML1TK6(1) | | S16SCM20* |
| SM/SC 20ML1TK6(1) | | S16SCM20* |
| SM/SC 16ML1TK6(1) | | S16SCML1* |
| SM/SC 14ML1TK6(1) | | S16SCML1* |
| SM/SC 16ML11TK6(1) | | S16SCML11* |

(1): Example of plating, for other plating see page 164
*: Heads to be used with handle PN: SHANDLES

### Crimp Tooling #8

| Part number hand tool |
|---|
| M317 |

| Part number positioner + locator setting |
|---|
| VGE10078A |

### Extraction Tool #8

| Part number extraction tool |
|---|
| 51060210936 |

# 18X2M3 (Shell size 18, 3x#16, 2x#8)

## Contacts

| #16 | Contact type | Wire size | | Part number | | Max wire Ø | Max insulator Ø |
|---|---|---|---|---|---|---|---|
| | | AWG | mm² | Male | Female | | |
| Crimp | Machined | 30-28 | 0.50-0.08 | RM28M1K | RC28M1K | 0.55 | 1.00 |
| | | 26-24 | 0.13-0.25 | RM24M9K | RC24M9K | 0.80 | 1.60 |
| | | 22-20 | 0.32-0.52 | RM20M13K | RC20M13K | 1.15 | 1.80 |
| | | 22-20 | 0.32-0.52 | RM20M12K | RC20M12K | 1.15 | 2.20 |
| | | 20-16 | 0.52-1.50 | RM16M23K | RC16M23K | 1.80 | 3.20 |
| | | 16-14 | 1.50-2.50 | RM14M30K | RC14M30K | 2.30 | 3.20 |
| | Stamped & Formed reeled contacts<br>See note (2) for loose piece | 26-24 | 0.13-0.25 | SM24M1TK6(1)(2) | SC24M1TK6(1)(2) | - | 0.90-1.60 |
| | | 22-20 | 0.32-0.52 | SM20M1TK6(1)(2) | SC20M1TK6(1)(2) | - | 1.20-2.10 |
| | | 18-16 | 0.80-1.50 | SM16M1TK6(1)(2) | SC16M1TK6(1)(2) | - | 3.20 |
| | | 18-16 | 0.80-1.50 | SM16M11TK6(1)(2) | SC16M11TK6(1)(2) | - | 3.00 |
| | | 14 | 2.50 | SM14M1TK6(1)(2) | SC14M1TK6(1)(2) | - | 3.20 |
| PCB | Machined (3) | - | - | RM20M12E83K(1) | RC20M12E84K(1) | - | - |
| Coaxial | Cable Multipiece | - | - | RMDXK10D28 | RCDXK1D28 | - | - |
| | Cable Monocrimp | - | - | RMDX60xxD28 | RCDX60xxD28 | - | - |
| | Twisted pair Multipiece | - | - | RMDXK10D28 + york090 | RCDXK1D28 + york090 | - | - |
| | Twisted pair Monocrimp | - | - | RMDX60xxD28 | RCDX60xxD28 | - | - |
| Fiber optic | POF contacts<br>(Plastic Optical Fiber) | - | - | RMPOF1000 | RCPOF1000B | - | - |
| #8 | | | | | | | |
| Crimp | Machined | 16 | 1.50 | 82913601A(1) | 82913600A(1) | 1.72 | 6.50 |
| | | 14 | 2.50 | 82913603A(1) | 82913602A(1) | 2.22 | |
| | | 12 | 4.00 | 82913605A(1) | 82913604A(1) | 2.82 | |
| | | 10 | 6.00 | 82913607A(1) | 82913606A(1) | 3.50 | |
| | | 8 | 10.00 | 82913609A(1) | 82913608A(1) | 4.35 | |
| PCB | Machined (3) | - | - | 82911685NPC(1) | 82911684NPC(1) | - | - |

(1): Example of plating, for other plating see page 164 (2): Loose piece contact available if putting L. Example: SM20ML1TK6 (3): For dimensions see page 168 Note: all dimensions are in mm

## Electrical Characteristics

**UL**
44A 600V UL94 V-0

**CSA**
34A 600V UL94 V-0

**IEC**
32A 300V 4kV 3

## UTS 18X2M3 Derating Curves

**Test conditions**

**Contact used:**
Machined contacts
**Wires used:**
8.37mm²

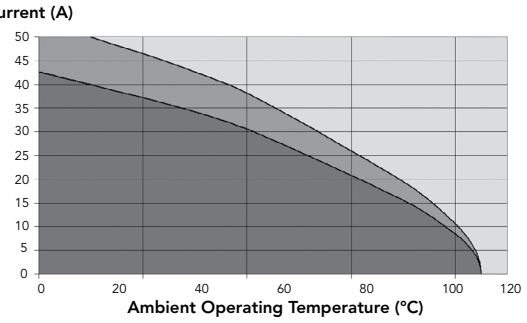


Current use | Limited use | Not recommended use

## 103W3 (Shell size 10, 3x#20, 3x#16)

## Connector Part Numbers

| Contact type | Connector type | Backshell | Part number | |
|---|---|---|---|---|
| | | | Male insert | Female insert |
| Crimp contacts supplied separately see page 83 | Free hanging receptacle | Cable gland (Fig. 1) | UTS1JC103W3P | UTS1JC103W3S |
| | Plug | Without (Fig. 2) | UTS6103W3P | UTS6103W3S |
| | Plug | Cable gland (Fig. 3) | UTS6JC103W3P | UTS6JC103W3S |
| | Jam nut receptacle | Without (Fig. 4) | UTS7103W3P | UTS7103W3S |
| PCB contacts supplied separately see page 83 | Jam nut receptacle with stand off and without hold down clip | Without (Fig. 4) | UTS7103W3P | UTS7103W3S |

# 103W3 (Shell size 10, 3x#20, 3x#16)

## Dimensions

### Free Hanging - UTS1

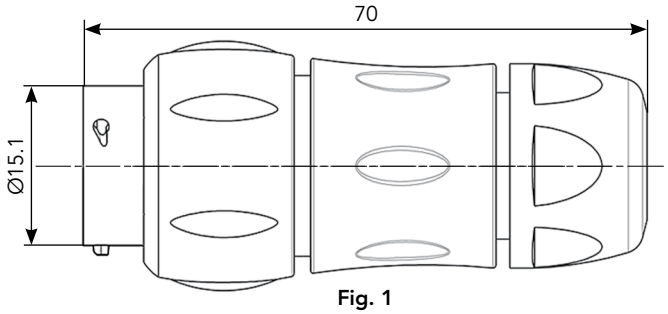


**Fig. 1**

### Plug - UTS6

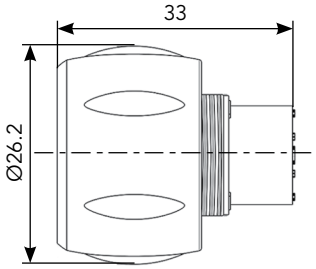


**Fig. 2** Male

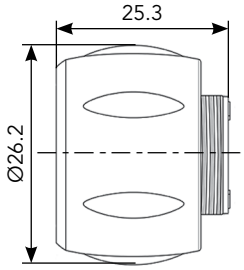


**Fig. 2** Female

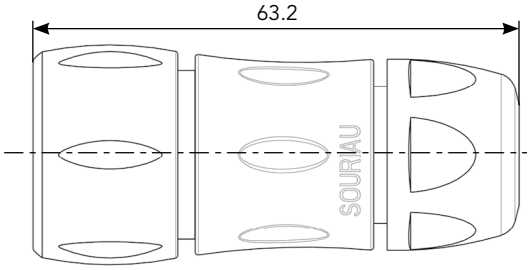


**Fig. 3**

### Jam Nut Receptacle - UTS7

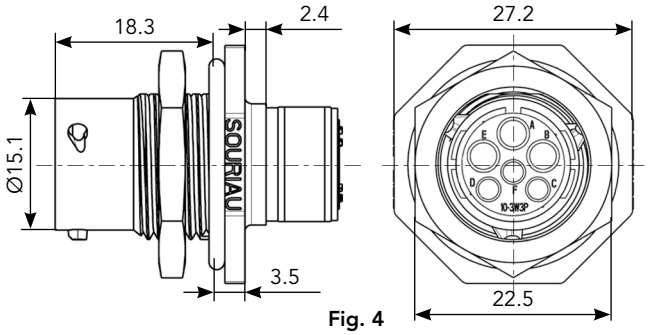


**Fig. 4**

### Mated Connector Length - UTS7

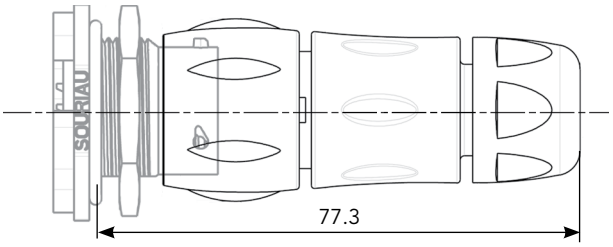


### Panel Cut Out

Jam Nut Receptacle - UTS7

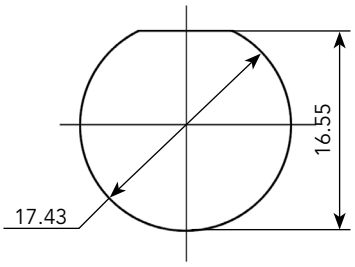


### Drilling Pattern

Hole sizes:
#20:0.9mm
#16:1.3mm

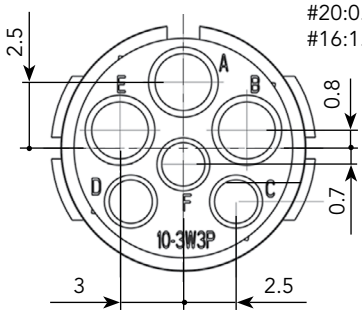


Note: all dimensions are in mm

# 103W3 (Shell size 10, 3x#20, 3x#16)

## Accessories and Tooling

### Jam Nut Sealing Caps

IP68/69K

| Part number |
|---|
| UTS10DCG |

IP68/69K Metal terminal

| Part number |
|---|
| UTS10DCGR |

### Handle

| Part number |
|---|
| SHANDLES |

### Tool Kit

| Part number |
|---|
| TOOLKIT |

### Plug Sealing Cap

IP68/69K

| Part number |
|---|
| UTS610DCG |

### Square Flange Sealing Cap

IP68/69K Metal terminal

| Part number |
|---|
| UTS10DCGE |

### Plastic Protective Cap

| Part numbers | |
|---|---|
| Receptacle cap | Plug cap |
| 85005586A | 85005595 |

### Gasket

| Part numbers |
|---|
| UTFD12B |

### Color Coding Rings

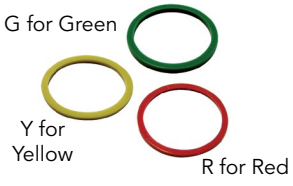


| Part numbers | |
|---|---|
| Receptacles | Plugs |
| UTS710CCRR | UTS610CCRR |
| UTS710CCRY | UTS610CCRY |
| UTS710CCRG | UTS610CCRG |

### Crimp Tooling

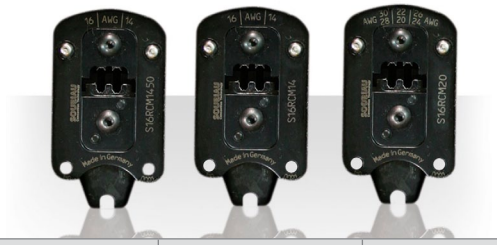

| Contacts | Contact size | Part number of head |
|---|---|---|
| RM/RC 28M1K | Standard contacts #16 Ø 1.6mm | S16RCM20* |
| RM/RC 24M9K | | S16RCM20* |
| RM/RC 20M13K | | S16RCM20* |
| RM/RC 20M12K | | S16RCM20* |
| RM/RC 16M23K | | S16RCM16* |
| RM/RC 14M30K | | S16RCM14* |
| SM/SC 24ML1TK6(1) | | S16SCM20* |
| SM/SC 20ML1TK6(1) | | S16SCM20* |
| SM/SC 16ML1TK6(1) | | S16SCML1* |
| SM/SC 14ML1TK6(1) | | S16SCML1* |
| SM/SC 16ML11TK6(1) | | S16SCML11* |
| RMDXK10D28 | Coaxial contacts | M10S1J with die set & stop bushing see page 200 to 204 |
| RCDXK1D28 | | |
| RMDX60xxD28 | | |
| RCDX60xxD28 | | |
| RM/RC DXK10D28 + york090 | | |
| RM/RC 24W3K(1) | Standard contacts #20 Ø 1mm | S20RCM* |
| RM/RC 20W3K(1) | | S20RCM* |
| RM/RC 18W3K(1) | | S20RCM* |
| SM/SC 24WL3S | | S20SCM20* |
| SM/SC 20WL3S | | S20SCM20* |

(1): Example of plating, for other plating see page 164
*: Heads to be used with handle PN: SHANDLES

# 103W3 (Shell size 10, 3x#20, 3x#16)

## Contacts

| #16 | Contact type | Wire size AWG | Wire size mm² | Part number Male | Part number Female | Max wire Ø | Max insulator Ø |
|---|---|---|---|---|---|---|---|
| Crimp | Machined | 30-28 | 0.50-0.08 | RM28M1K | RC28M1K | 0.55 | 1.00 |
| | | 26-24 | 0.13-0.25 | RM24M9K | RC24M9K | 0.80 | 1.60 |
| | | 22-20 | 0.32-0.52 | RM20M13K | RC20M13K | 1.15 | 1.80 |
| | | 22-20 | 0.32-0.52 | RM20M12K | RC20M12K | 1.15 | 2.20 |
| | | 20-16 | 0.52-1.50 | RM16M23K | RC16M23K | 1.80 | 3.20 |
| | | 16-14 | 1.50-2.50 | RM14M30K | RC14M30K | 2.30 | 3.20 |
| | Stamped & Formed reeled contacts<br>See note (2) for loose piece | 26-24 | 0.13-0.25 | SM24M1TK6(1)(2) | SC24M1TK6(1)(2) | - | 0.90-1.60 |
| | | 22-20 | 0.32-0.52 | SM20M1TK6(1)(2) | SC20M1TK6(1)(2) | - | 1.20-2.10 |
| | | 18-16 | 0.80-1.50 | SM16M1TK6(1)(2) | SC16M1TK6(1)(2) | - | 3.20 |
| | | 18-16 | 0.80-1.50 | SM16M11TK6(1)(2) | SC16M11TK6(1)(2) | - | 3.00 |
| | | 14 | 2.50 | SM14M1TK6(1)(2) | SC14M1TK6(1)(2) | - | 3.20 |
| PCB | Machined (3) | - | - | RM20M12E83K(1) | RC20M12E84K(1) | - | - |
| Coaxial | Cable Multipiece | - | - | RMDXK10D28 | RCDXK1D28 | - | - |
| | Cable Monocrimp | - | - | RMDX60xxD28 | RCDX60xxD28 | - | - |
| | Twisted pair Multipiece | - | - | RMDXK10D28 + york090 | RCDXK1D28 + york090 | - | - |
| | Twisted pair Monocrimp | - | - | RMDX60xxD28 | RCDX60xxD28 | - | - |
| Fiber optic | POF contacts<br>(Plastic Optical Fiber) | - | - | RMPOF1000 | RCPOF1000B | - | - |
| #20 | | | | | | | |
| Crimp | Machined | 26-24 | 0.13-0.25 | RM24W3K(1) | RC24W3K(1) | 0.80 | 1.60 |
| | | 22-20 | 0.32-0.52 | RM20W3K(1) | RC20W3K(1) | 1.15 | 1.60 |
| | | 20-18 | 0.50-0.93 | RM18W3K(1) | RC18W3K(1) | 1.30 | 2.10 |
| | Stamped & Formed reeled contacts<br>See note (2) for loose piece | 26-24 | 0.13-0.25 | SM24W3TK6(2) | SC24W3TK6(2) | - | 0.90-1.60 |
| | | 26-24 | 0.13-0.25 | SM24W3S26(2) | SC24W3S25(2) | - | 0.90-1.60 |
| | | 22-20 | 0.32-0.52 | SM20W3TK6(2) | SC20W3TK65(2) | - | 1.20-2.10 |
| | | 22-20 | 0.32-0.52 | SM20W3S26(2) | SC20W3S25(2) | - | 1.20-2.10 |
| PCB | Machined (3) | - | - | RMW5016K | RCW5016K | - | - |

(1): Example of plating, for other plating see page 164 (2): Loose piece contact available if putting L. Example: SM20ML1TK6 (3): For dimensions see page 168 Note: all dimensions are in mm

## Electrical Characteristics

**UL**
10A 500V UL94 V-0

**CSA**
7A 500V UL94 V-0

**IEC**
5A 32V 1.5kV 3
Temperature elevation: 50°C

## UTS 103W3 Derating Curves

**Test conditions**

**Contact used:**
Machined contacts
**Wires used:**
1.31mm²
0.518mm²

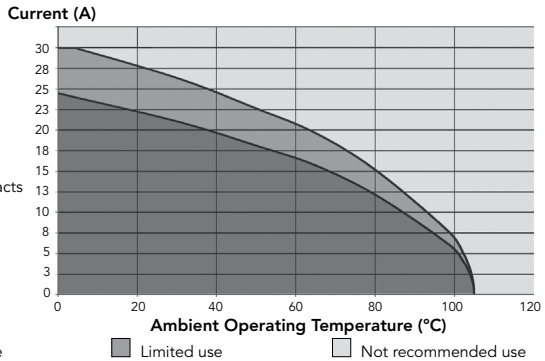


Current use | Limited use | Not recommended use

## 106 - 10E6/10D6 (Shell size 10, 6x#20)

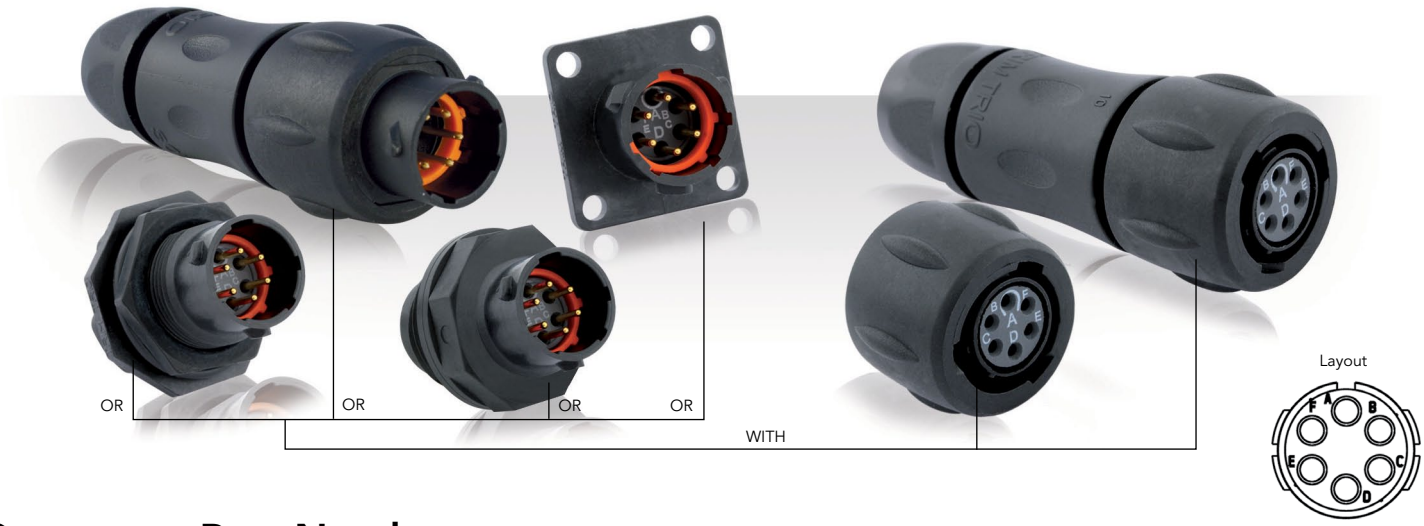


## Connector Part Numbers

| Contact type | Connector type | Backshell | Part number | |
|---|---|---|---|---|
| | | | Male insert | Female insert |
| Crimp contacts supplied separately see page 87 | Free hanging receptacle | Cable gland (Fig. 1) | UTS1JC106P | UTS1JC106S |
| | Plug | Without (Fig. 2) | UTS6106P | UTS6106S |
| | Plug | Cable gland (Fig. 3) | UTS6JC106P | UTS6JC106S |
| | Jam nut receptacle | Without (Fig. 4) | UTS7106P | UTS7106S |
| PCB contacts supplied separately see page 87 | Jam nut receptacle | Without (Fig. 4) | UTS7106P | UTS7106S |
| Handsolder electrical contacts loaded | Square flange receptacle | Without (Fig. 10) | UTS010E6P | UTS010E6S |
| | Plug | Without (Fig. 2) | UTS610E6P | UTS610E6S |
| | | Cable gland (Fig. 3) | UTS6JC10E6P | UTS6JC10E6S |
| | Jam nut receptacle | Without (Fig. 5) | UTS710E6P | UTS710E6S |
| Handsolder electrical contacts loaded see page 87 | M16 threaded receptacle | Without (Fig. 8) | UTS710E6PM16 | UTS710E6SM16 |
| PCB contacts supplied separately see page 87 | Jam nut receptacle | Without (Fig.4) | UTS7106P | UTS7106S |
| PCB contacts loaded see page 87 | Square flange receptacle | Without (Fig.9) | UTS010D6P | UTS010D6S |
| | Jam nut receptacle with stand off and with hold down clips | Without (Fig.7) | UTS710D6P32 | UTS710D6S32 |
| | Jam nut receptacle with stand off and without hold down clip | Without (Fig.6) | UTS710D6P | UTS710D6S |

Possibilities of discrimination/keying methods see page 208

Sealed unmated

## Overmoulded Cable Assembly Part Numbers

| Overmoulding type | Connector type | Wire size (mm²) | Harmonized cable part number (1) | Part number (length: 1m.)* | |
|---|---|---|---|---|---|
| | | | | Male plug | Female plug |
| Straight ending | Plug | 0.5 | H05 VV - F 6x0.5 | HAUTS0V106PST100 | HAUTS0V106SST100 |
| | | | | HAUTS0V10E6PST100 | HAUTS0V10E6SST100 |
| Right angle ending | Plug | 0.5 | H05 VV - F 6x0.5 | HAUTS0V106PRA100 | HAUTS0V106SRA100 |
| | | | | HAUTS0V10E6PRA100 | HAUTS0V10E6SRA100 |

(1) Other cable available on demand

* Other lengths available on demand

# 106 - 10E6/10D6 (Shell size 10, 6x#20)

## Dimensions

### Free Hanging - UTS1

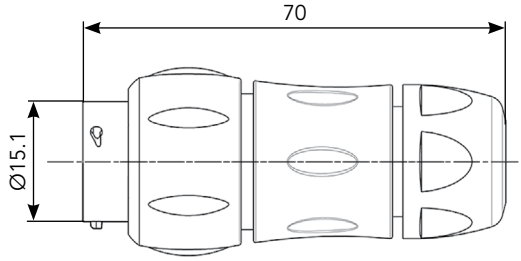


Fig. 1

### Plug - UTS6

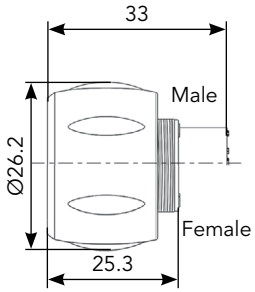


Fig. 2

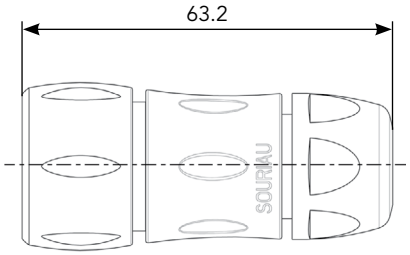


Fig. 3

### Jam Nut Receptacle - UTS7

Fig. 4

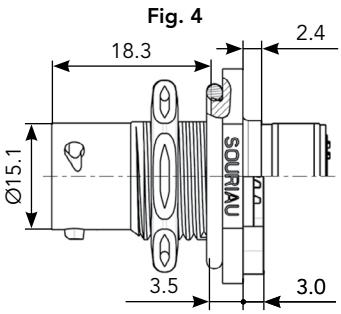


Fig. 5

Fig. 6

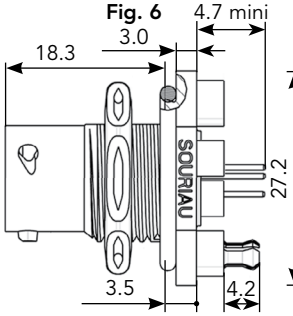


Fig. 7

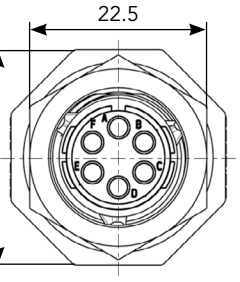


Front view

### M16 Threaded Receptacle - UTS7

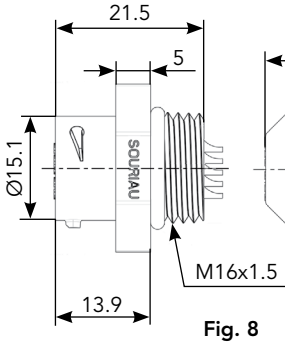


Fig. 8

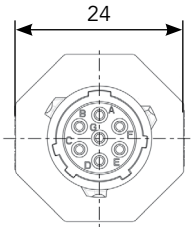


Front view

### Square Flange Receptacle - UTS0

Fig. 9

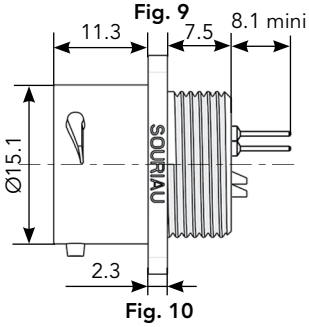


Fig. 10

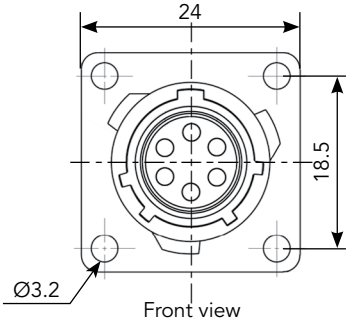


Front view

### Mated Connector Lengths

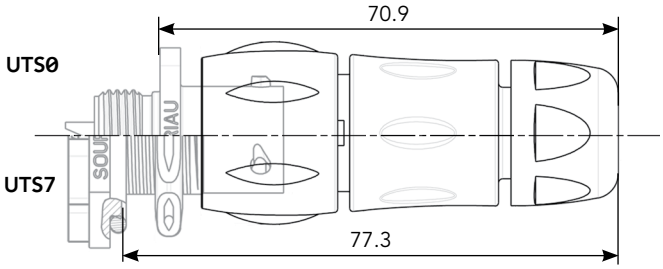


### Panel Cut Out

Square Flange Receptacle - UTS0

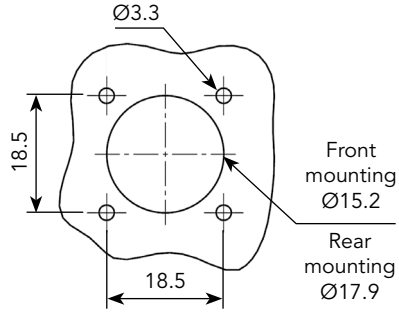


Jam nut receptacle UTS7

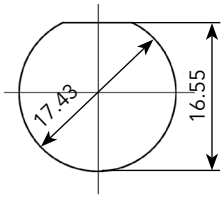


M16

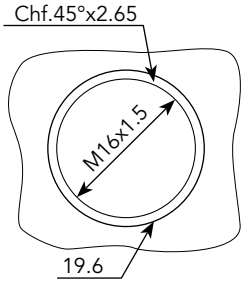


### Drilling Pattern

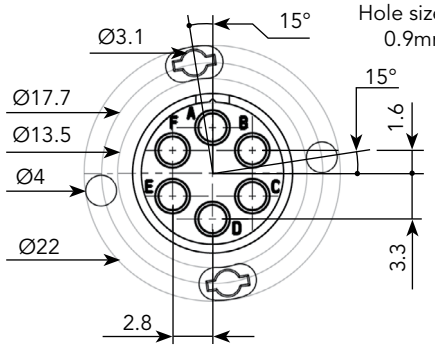


Note: Overmoulded cable assembly dimensions available page 179.

Note: all dimensions are in mm

# 106 - 10E6/10D6 (Shell size 10, 6x#20)

## Accessories and Tooling

### Jam Nut Sealing Caps

IP68/69K

| Part number |
|---|
| UTS10DCG |

IP68/69K Metal terminal

| Part number |
|---|
| UTS10DCGR |

### Handle (without Head)

| Part number |
|---|
| SHANDLES |

### Tool Kit

| Part number |
|---|
| TOOLKIT |

### Plug Sealing Cap

IP68/69K

| Part number |
|---|
| UTS610DCG |

### Square Flange Sealing Cap

IP68/69K Metal terminal

| Part number |
|---|
| UTS10DCGE |

### Crimp Tooling (without Shandles)

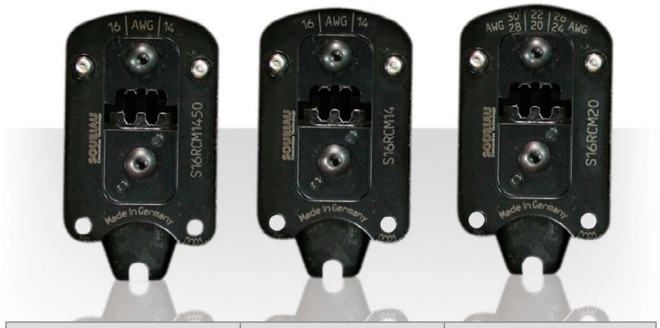


| Contacts | Contact size | Part number of head |
|---|---|---|
| RM/RC 24W3K(1) | Standard contacts<br>#20<br>Ø 1mm | S20RCM* |
| RM/RC 20W3K(1) | | S20RCM* |
| RM/RC 18W3K(1) | | S20RCM* |
| SM/SC 24WL3S | | S20SCM20* |
| SM/SC 20WL3S | | S20SCM20* |

(1): Example of plating, for other plating see page 164
*: Heads to be used with handle PN: SHANDLES

Handle

+

Head

=

Complete set

### Plastic Protective Cap

| Part numbers | |
|---|---|
| Receptacle cap | Plug cap |
| 85005586A | 85005595 |

### Gasket

| Part numbers |
|---|
| UTFD12B |

### Color Coding Rings

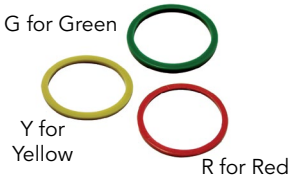


| Part numbers | |
|---|---|
| Receptacles | Plugs |
| UTS710CCRR | UTS610CCRR |
| UTS710CCRY | UTS610CCRY |
| UTS710CCRG | UTS610CCRG |

### Extraction Tool #20

| Part number |
|---|
| RX20D44 |

# 106 - 10E6/10D6 (Shell size 10, 6x#20)

## Contacts

| #20 | Contact type | Wire size | | Part number | | Max wire Ø | Max insulator Ø |
|---|---|---|---|---|---|---|---|
| | | AWG | mm² | Male | Female | | |
| Crimp | Machined | 26-24 | 0.13-0.25 | RM24W3K(1) | RC24W3K(1) | 0.80 | 1.60 |
| | | 22-20 | 0.32-0.52 | RM20W3K(1) | RC20W3K(1) | 1.15 | 1.60 |
| | | 20-18 | 0.50-0.93 | RM18W3K(1) | RC18W3K(1) | 1.30 | 2.10 |
| | Stamped & Formed reeled contacts<br>See note (2) for loose piece | 26-24 | 0.13-0.25 | SM24W3TK6(2) | SC24W3TK6(2) | - | 0.90-1.60 |
| | | 26-24 | 0.13-0.25 | SM24W3S26(2) | SC24W3S25(2) | - | 0.90-1.60 |
| | | 22-20 | 0.32-0.52 | SM20W3TK6(2) | SC20W3TK6(2) | - | 1.20-2.10 |
| | | 22-20 | 0.32-0.52 | SM20W3S26(2) | SC20W3S25(2) | - | 1.20-2.10 |
| PCB | Machined (3) | - | - | RMW5016K | RCW5016K | - | - |

(1): Example of plating, for other plating see page 164 (2): Loose piece contact available if putting L. Example: SM20WL3TK6 (3): For dimensions see page 168 Note: all dimensions are in mm

| #20 | Contact type | Plating | Cable acceptance (AWG) | Wire stripping length |
|---|---|---|---|---|
| Handsolder | Loaded in the connector | Min 0.4µ gold over 0.8µ Ni | 22 to 18 | 3.8 mm |



## Electrical Characteristics

**UTS 106**
**UL**
6A 250V UL94 V-0

**UTS 10E6/10D6**
**UL**
6A 250V UL94 HB

**CSA**
4A 250V UL94 V-0

**CSA**
6A 250V UL94 HB

**IEC**
7A 32V 1.5kV 3

## UTS 106 - 10E6/10D6 Derating Curves

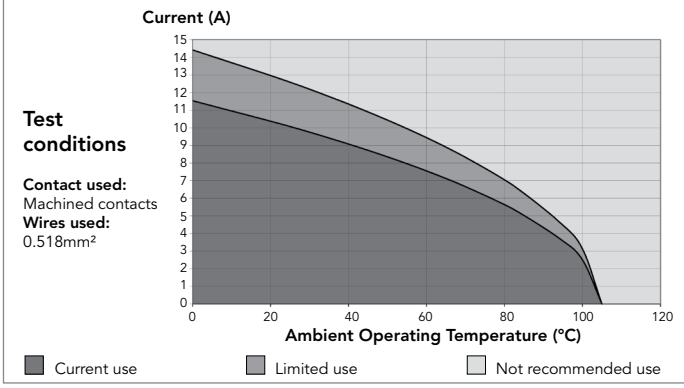


**Test conditions**

**Contact used:**
Machined contacts
**Wires used:**
0.518mm²

## 10E98/10D98 (Shell size 10, 6x#20)

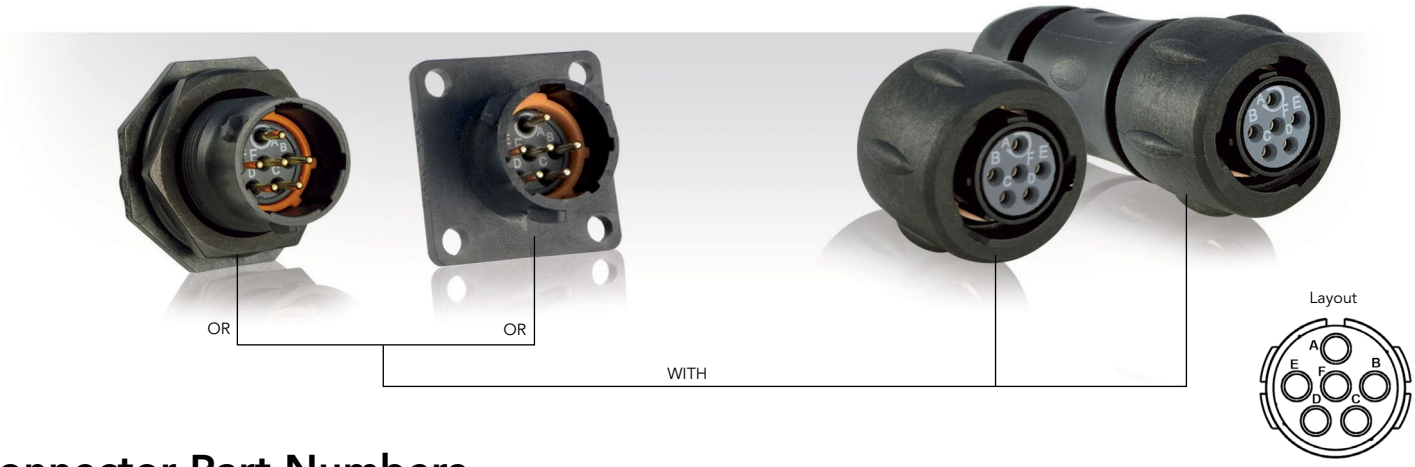


## Connector Part Numbers

| Contact type | Connector type | Backshell | Part number | |
|---|---|---|---|---|
| | | | Male insert | Female insert |
| Handsolder electrical contacts loaded see page 91 | Square flange receptacle | Without (Fig. 6) | UTS010E98P | UTS010E98S |
| | Plug | Without (Fig. 1) | UTS610E98P | UTS610E98S |
| | | Cable gland (Fig. 2) | UTS6JC10E98P | UTS6JC10E98S |
| | Jam nut receptacle | Without (Fig. 3) | UTS710E98P | UTS710E98S |
| PCB contacts loaded see page 91 | Square flange receptacle | Without (Fig. 7) | UTS010D98P | UTS010D98S |
| | Jam nut receptacle with stand off and with hold down clips | Without (Fig. 4) | UTS710D98P32 | UTS710D98S32 |
| | Jam nut receptacle with stand off and without hold down clip | Without (Fig. 5) | UTS710D98P | UTS710D98S |

Possibilities of discrimination/keying methods see page 208

Sealed unmated

## Overmoulded Cable Assembly Part Numbers

| Overmoulding type | Connector type | Wire size (mm²) | Harmonized cable part number (1) | Part number (length: 1m.)* | |
|---|---|---|---|---|---|
| | | | | Male plug | Female plug |
| Straight ending | Plug | 0.5 | H05 VV - F 6x0.5 | HAUTS0V10E98PST100 | HAUTS0V10E98SST100 |
| Right angle ending | Plug | 0.5 | H05 VV - F 6x0.5 | HAUTS0V10E98PRA100 | HAUTS0V10E98SRA100 |

(1) Other cable available on demand

* Other lengths available on demand

# 10E98/10D98 (Shell size 10, 6x#20)

## Dimensions

### Plug - UTS6

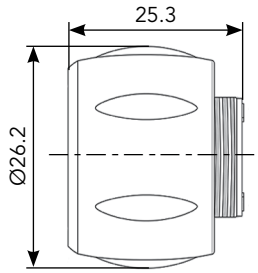


Fig. 1

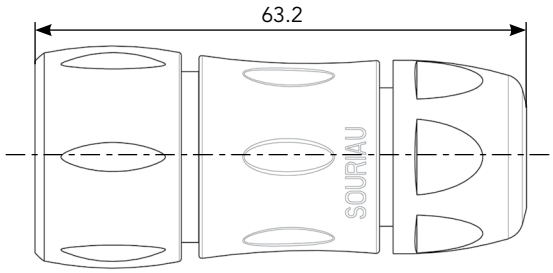


Fig. 2

### Jam Nut Receptacle - UTS7

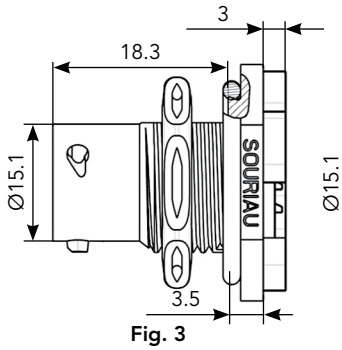


Fig. 3

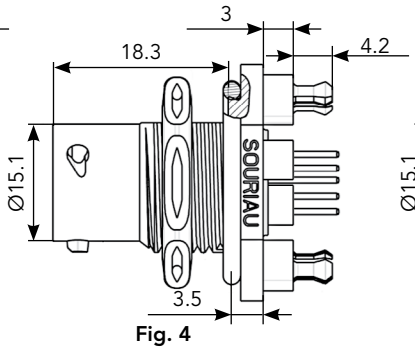


Fig. 4

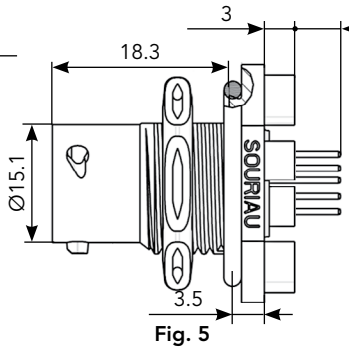


Fig. 5

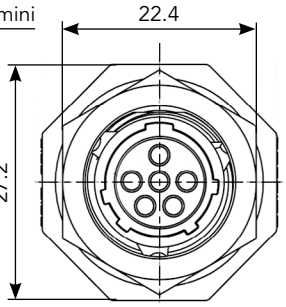


Front view

### Square Flange Receptacle - UTS0

Fig. 7

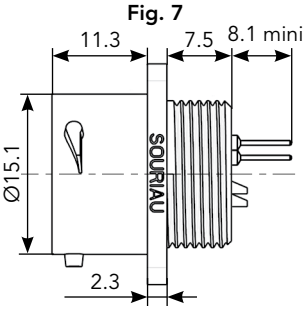


Fig. 6

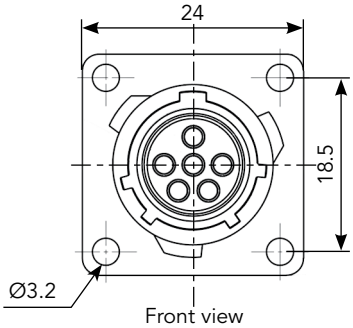


Front view

### Mated Connector Lengths

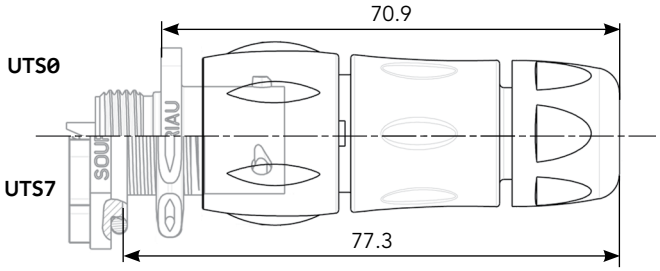


### Panel Cut Out

Square Flange Receptacle - UTS0

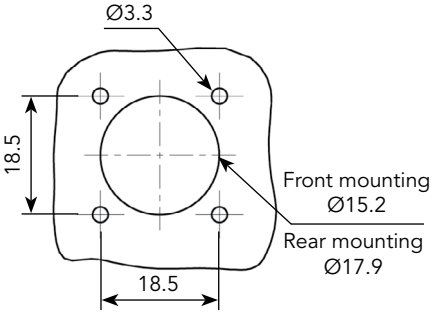


Jam Nut Receptacle - UTS7

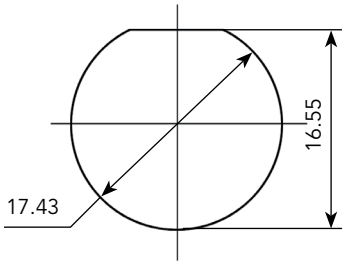


### Drilling Pattern

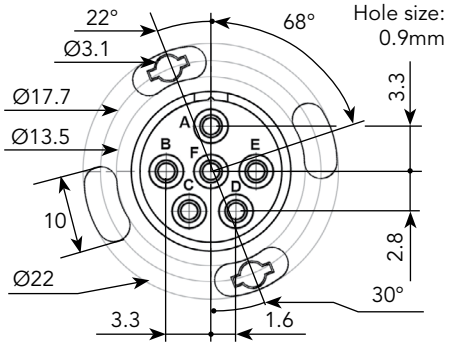


Note: Overmoulded cable assembly dimensions available page 179.

Note: all dimensions are in mm

# 10E98/10D98 (Shell size 10, 6x#20)

## Accessories and Tooling

### Jam Nut Sealing Caps

IP68/69K

| Part number |
|---|
| UTS10DCG |

IP68/69K Metal terminal

| Part number |
|---|
| UTS10DCGR |

### Plug Protective Cap

IP68/69K

| Part number |
|---|
| UTS610DCG |

### Square Flange Sealing Cap

IP68/69K Metal terminal

| Part number |
|---|
| UTS10DCGE |

### Plastic Protective Cap

| Part numbers | |
|---|---|
| Receptacle cap | Plug cap |
| 85005586A | 85005595 |

### Gasket

| Part numbers |
|---|
| UTFD12B |

### Color Coding Rings

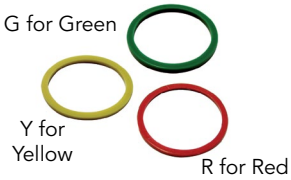


| Part numbers | |
|---|---|
| Receptacles | Plugs |
| UTS710CCRR | UTS610CCRR |
| UTS710CCRY | UTS610CCRY |
| UTS710CCRG | UTS610CCRG |

# 10E98/10D98 (Shell size 10, 6x#20)

## Contacts

| #20 | Contact type | Plating | Cable acceptance (AWG) | Wire stripping length |
|---|---|---|---|---|
| Handsolder | Loaded in the connector | Min 0.4µ gold over 0.8µ Ni | 22 to 18 | 5 mm |
| PCB | Machined (1) | Min 0.4µ gold over 0.8µ Ni | - | - |

(1): For dimensions see page 169



## Electrical Characteristics

**UL**
6A 250V UL94 HB

**CSA**
6A 250V UL94 HB

**IEC**
7A 50V 1.5kV 3

## UTS 10E98/10D98 Derating Curves

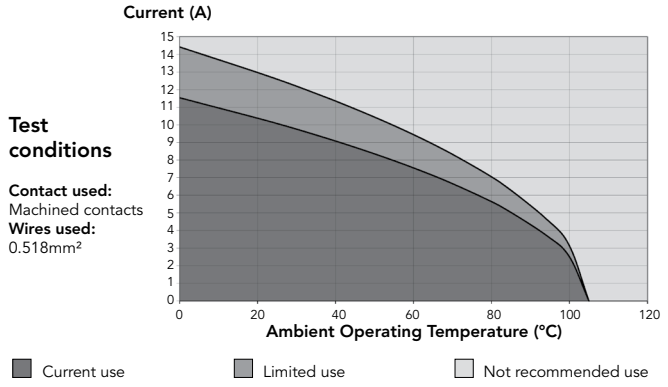

## 147 - 14E7/14D7 (Shell size 14, 6 + ground, 7x#16)

Layout

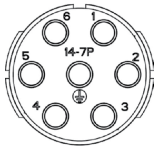


## Connector Part Numbers

| Contact type | Connector type | Backshell | Part number | |
|---|---|---|---|---|
| | | | Male insert | Female insert |
| Crimp contacts supplied separately see page 95 | Square flange receptacle | Without (Fig. 2) | UTS0147P | UTS0147S |
| | Free hanging receptacle | Cable gland and grommet (Fig. 3) | UTS1GJC147P | - |
| | Free hanging receptacle | Nut and grommet (Fig. 4) | UTS1GN147P | - |
| | Free hanging receptacle | Cable gland (Fig. 3) | UTS1JC147P | UTS1JC147S |
| | Plug | Without (Fig. 5) | UTS6147P | UTS6147S |
| | Plug | Cable gland and grommet (Fig. 6) | - | UTS6GJC147S |
| | Plug | Nut and grommet (Fig. 7) | - | UTS6GN147S |
| | Plug | Cable gland (Fig. 6) | UTS6JC147P | UTS6JC147S |
| | Jam nut receptacle | Without (Fig. 8) | UTS7147P | UTS7147S |
| | Jam nut receptacle | Cable gland and grommet (Fig. 10) | UTS7GJC147P | - |
| | Jam nut receptacle | Nut and grommet (Fig. 9) | UTS7GN147P | - |
| PCB contacts loaded see page 95 | Jam nut receptacle | With stand off and hold down clip (Fig. 11) | UTS7147PSEK9 | - |
| Screw contacts loaded | Jam nut receptacle | Without (Fig. 8) | UTS7147PSCR | UTS7147SSCR |
| | Free hanging receptacle | Cable gland (Fig. 3) | UTS1JC147PSCR | - |
| | Plug | Cable gland (Fig. 6) | UTS6JC147PSCR | UTS6JC147SSCR |
| Handsolder electrical contacts loaded see page 95 | Square flange receptacle | Without (Fig. 2) | UTS014E7P | UTS014E7S |
| | Plug | Cable gland (Fig. 6) | UTS6JC14E7P | UTS6JC14E7S |
| | Jam nut receptacle | Without (Fig. 8) | UTS714E7P | UTS714E7S |
| PCB contacts loaded see page 95 | Square flange receptacle | Without (Fig. 1) | UTS014D7P | UTS014D7S |
| | Jam nut receptacle with stand off and hold down clips | Without (Fig. 11) | UTS714D7P32 | UTS714D7S32 |
| | Jam nut receptacle with stand off and without hold down clip | Without (Fig. 11) | UTS714D7P | UTS714D7S |

Sealed unmated

## Overmoulded Cable Assembly Part Numbers

| Overmoulding type | Connector type | Wire size (mm²) | Harmonized cable part number (1) | Part number (length: 1m.)* | |
|---|---|---|---|---|---|
| | | | | Male plug | Female plug |
| Straight ending | Plug | 1.5 | H05 VV - F 7x1.5 | HAUTS0V147PST100 | HAUTS0V147SST100 |
| | | | | HAUTS0V14E7PST100 | HAUTS0V14E7SST100 |
| Right angle ending | Plug | 1.5 | H05 VV - F 7x1.5 | HAUTS0V147PRA100 | HAUTS0V147SRA100 |
| | | | | HAUTS0V14E7PRA100 | HAUTS0V14E7SRA100 |

(1) Other cable available on demand

* Other lengths available on demand

# 147 - 14E7/14D7 (Shell size 14, 6 + ground, 7x#16)

## Dimensions

### Square Flange Receptacle - UTS0

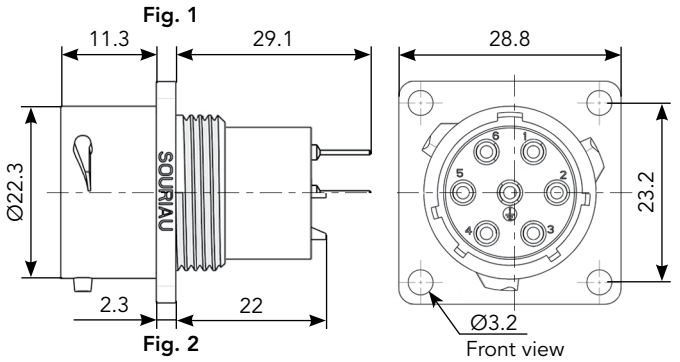


### Free Hanging - UTS1

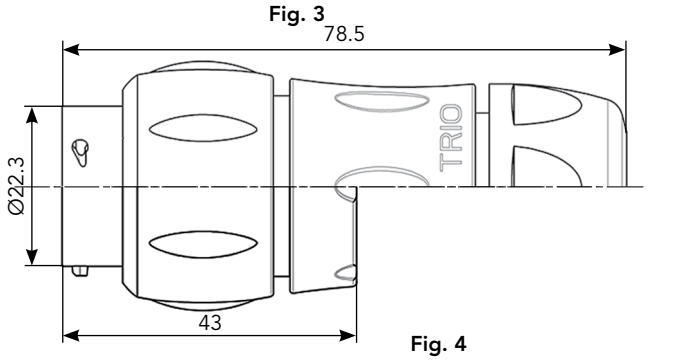


### Plug - UTS6

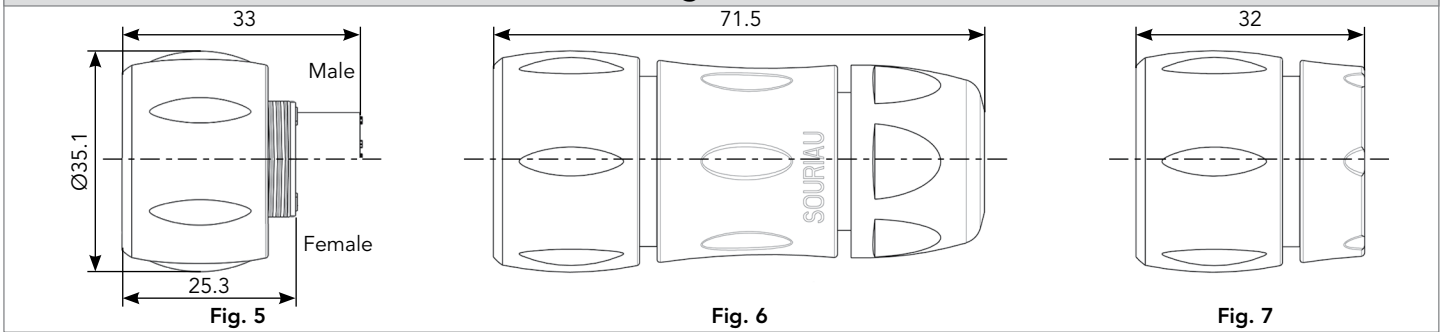


### Jam Nut Receptacle - UTS7

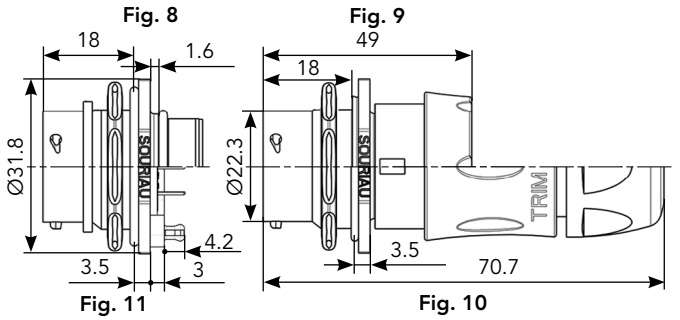


### Mated Connector Lengths

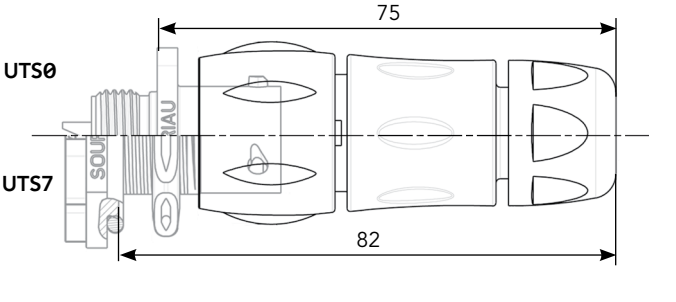


### Panel Cut Out

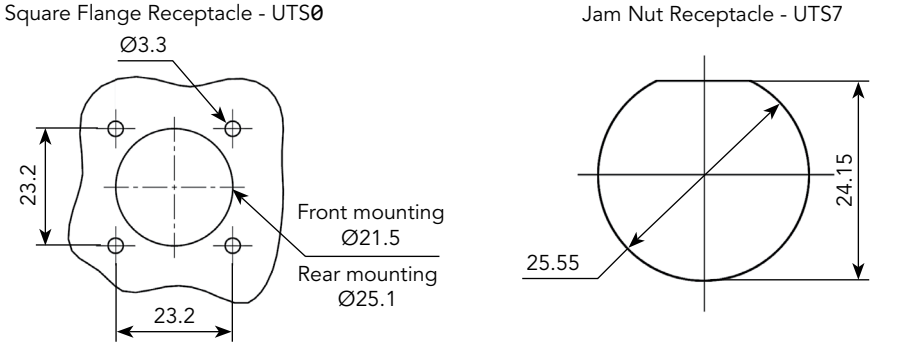


### Drilling Pattern

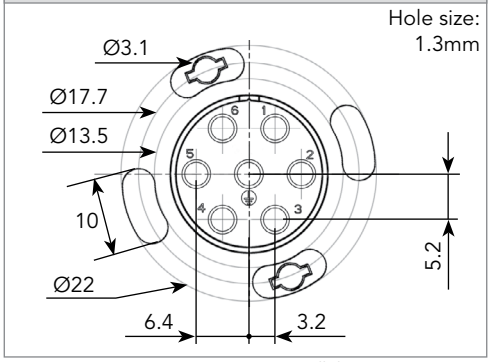


Note: Overmoulded cable assembly dimensions available page 179.

Note: all dimensions are in mm

# 147 - 14E7/14D7 (Shell size 14, 6 + ground, 7x#16)

## Accessories and Tooling

### Jam Nut Sealing Caps

IP68/69K

| Part number |
|---|
| UTS14DCG |

IP68/69K Metal terminal

| Part number |
|---|
| UTS14DCGR |

### Handle (without Head)

| Part number |
|---|
| SHANDLES |

### Tool Kit

| Part number |
|---|
| TOOLKIT |

### Plug Sealing Cap

IP68/69K

| Part number |
|---|
| UTS614DCG |

### Square Flange Sealing Cap

IP68/69K Metal terminal

| Part number |
|---|
| UTS14DCGE |

### Plastic Protective Cap

| Part numbers | |
|---|---|
| Receptacle cap | Plug cap |
| 85005588A | 85005597 |

### Gasket

| Part numbers |
|---|
| UTFD14B |

### Color Coding Rings

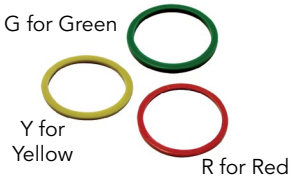


| Part numbers | |
|---|---|
| Receptacles | Plugs |
| UTS714CCRR | UTS614CCRR |
| UTS714CCRY | UTS614CCRY |
| UTS714CCRG | UTS614CCRG |

### Crimp Tooling (without Shandles)

| Contacts | Contact size | Part number of head |
|---|---|---|
| RM/RC 28M1K(1) | Standard contacts #16 Ø 1.6mm | S16RCM20* |
| RM/RC 24M9K(1) | | S16RCM20* |
| RM/RC 20M13K(1) | | S16RCM20* |
| RM/RC 20M12K(1) | | S16RCM20* |
| RM/RC 16M23K(1) | | S16RCM16* |
| RM/RC 14M30K(1) | | S16RCM14* |
| SM/SC 24ML1TK6(1) | | S16SCM20* |
| SM/SC 20ML1TK6(1) | | S16SCM20* |
| SM/SC 16ML1TK6(1) | | S16SCML1* |
| SM/SC 14ML1TK6(1) | | S16SCML1* |
| SM/SC 16ML11TK6(1) | | S16SCML11* |
| RMDXK10D28K | Coaxial contacts | M10S1J with die set & stop bushing see page 200 to 204 |
| RCDXK1D28K | | |
| RM/RC DX60xxD28K | | |
| RM/RC DXK10D28 + york090 | | |
| RM/RC DX60xxD28 | | |

(1): Example of plating, for other plating options see page 164
* Heads to be used with handle PN: SHANDLES

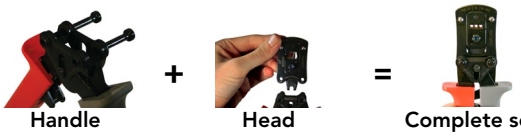

# 147 - 14E7/14D7 (Shell size 14, 6 + ground, 7x#16)

## Contacts

| #16 | Contact type | AWG | Part number | | Max wire Ø | Max insulator Ø |
|---|---|---|---|---|---|---|
| | | | Male | Female | | |
| Crimp | Machined | 30-28 | RM28M1K(1) | RC28M1K(1) | 0.55 | 1.00 |
| | | 26-24 | RM24M9K(1) | RC24M9K(1) | 0.80 | 1.60 |
| | | 22-20 | RM20M13K(1) | RC20M13K(1) | 1.15 | 1.80 |
| | | 22-20 | RM20M12K(1) | RC20M12K(1) | 1.15 | 2.20 |
| | | 20-16 | RM16M23K(1) | RC16M23K(1) | 1.80 | 3.20 |
| | | 16-14 | RM14M30K(1) | RC14M30K(1) | 2.30 | 3.20 |
| | Stamped & Formed reeled contacts<br>See note (2) for loose piece | 26-24 | SM24M1TK6(1)(2) | SC24M1TK6(1)(2) | - | 0.90-1.60 |
| | | 22-20 | SM20M1TK6(1)(2) | SC20M1TK6(1)(2) | - | 1.20-2.10 |
| | | 18-16 | SM16M1TK6(1)(2) | SC16M1TK6(1)(2) | - | 3.20 |
| | | 18-16 | SM16M11TK6(1)(2) | SC16M11TK6(1)(2) | - | 3.00 |
| | | 14 | SM14M1TK6(1)(2) | SC14M1TK6(1)(2) | - | 3.20 |
| PCB | Machined (3) | - | RM20M12E83K(1) | RC20M12E84K(1) | - | - |
| Coaxial | Cable Multipiece | see pages 167, 200 to 206 | RMDXK10D28 | RCDXK1D28 | - | - |
| | Cable Monocrimp | | RMDX60xxD28 | RCDX60xxD28 | - | - |
| | Twisted pair Multipiece | | RMDXK10D28 + york090 | RCDXK1D28 + york090 | - | - |
| | Twisted pair Monocrimp | | RMDX60xxD28 | RCDX60xxD28 | - | - |
| Fiber optic | POF contacts<br>(Plastic Optical Fiber) | - | RMPOF1000 | RCPOF1000B | - | - |
| Hand-solder | Loaded in the connector | 14-18 | - | - | - | - |

(1): Example of plating, for other plating see page 164 (2): Loose piece contact available if putting L. Example: SM20ML1TK6 (3): For dimensions see page 168 Note: all dimensions are in mm

6 +

## Electrical Characteristics

**UL**
10A 500V UL94 V-0

**CSA**
7A 500V UL94 V-0

**IEC**
16A 300V 4kV 3
Temperature elevation: 50°C

## UTS 147 - 14E7/14D7 Derating Curves

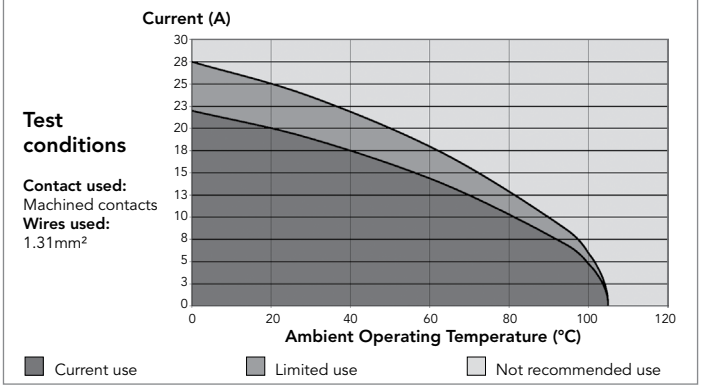

## 10E7/10D7 (Shell size 10, 7x#20)

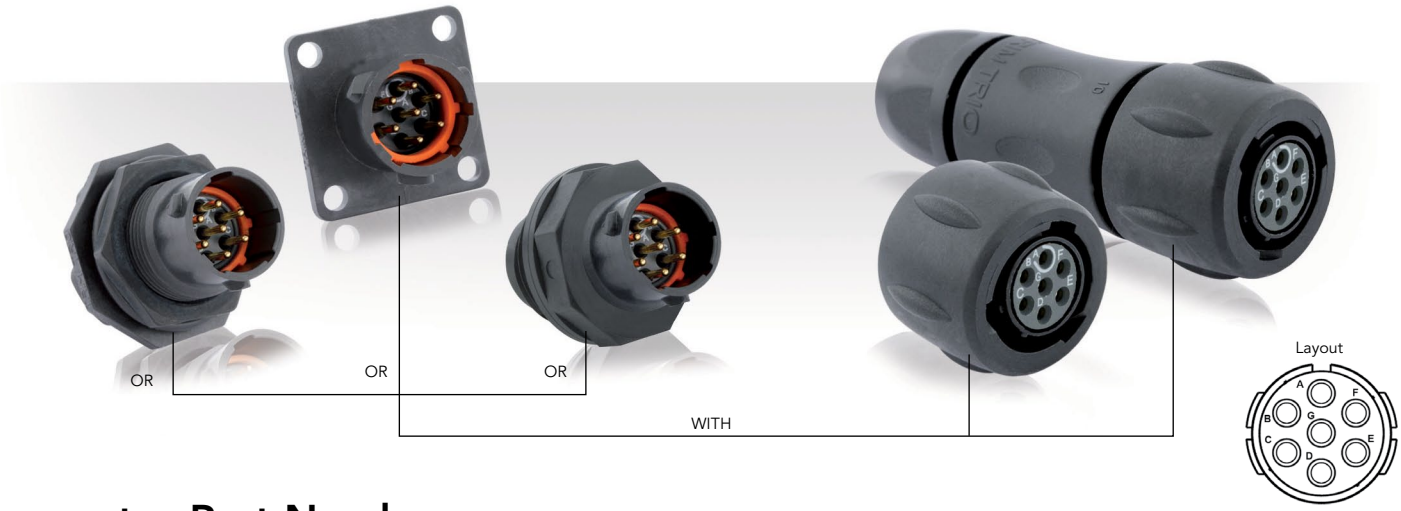


## Connector Part Numbers

| Contact type | Connector type | Backshell | Part number | |
|---|---|---|---|---|
| | | | Male insert | Female insert |
| Handsolder electrical contacts loaded see page 99 | Square flange receptacle | Without (Fig. 1) | UTS010E7P | UTS010E7S |
| | Plug | Without (Fig. 2) | UTS610E7P | UTS610E7S |
| | | Cable gland (Fig. 3) | UTS6JC10E7P | UTS6JC10E7S |
| | Jam nut receptacle | Without (Fig. 4) | UTS710E7P | UTS710E7S |
| | M16 threaded receptacle | Without (Fig. 5) | UTS710E7PM16 | UTS710E7SM16 |

Possibilities of discrimination/keying methods see page 208

Sealed unmated

## Overmoulded Cable Assembly Part Numbers

| Overmoulding type | Connector type | Wire size (mm²) | Harmonized cable part number (1) | Part number (length: 1m.)* | |
|---|---|---|---|---|---|
| | | | | Male plug | Female plug |
| Straight ending | Plug | 0.5 | H05 VV - F 7x0.5 | HAUTS0V10E7PST100 | HAUTS0V10E7SST100 |
| Right angle ending | Plug | 0.5 | H05 VV - F 7x0.5 | HAUTS0V10E7PRA100 | HAUTS0V10E7SRA100 |

(1) Other cable available on demand

* Other lengths available on demand

# 10E7/10D7 (Shell size 10, 7x#20)

## Dimensions

### Square Flange Receptacle - UTS0

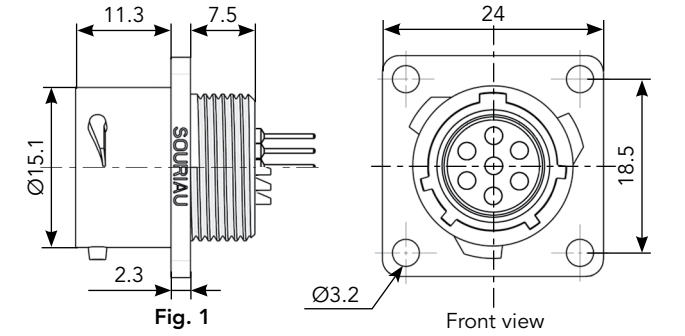


Fig. 1

### Plug - UTS6

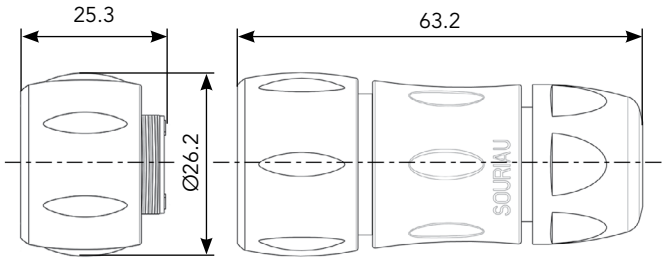


Fig. 2 Fig. 3

### Jam Nut Receptacle - UTS7

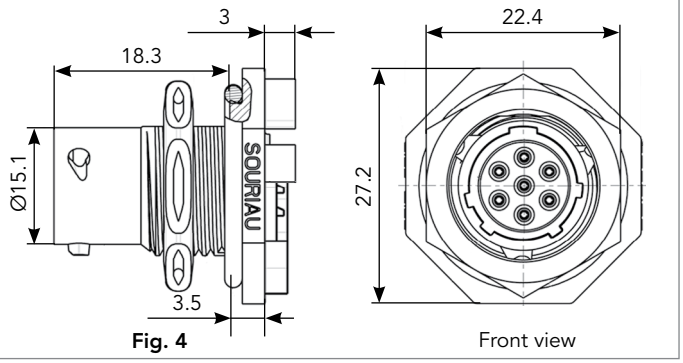


Fig. 4

### Mated Connector Lengths

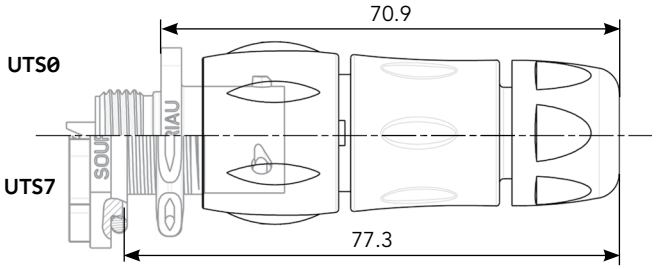


### M16 Threaded Receptacle - UTS7

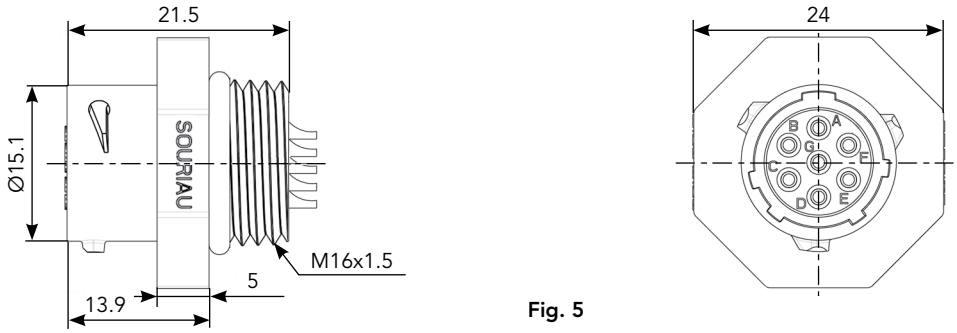


Fig. 5

### Panel Cut Out

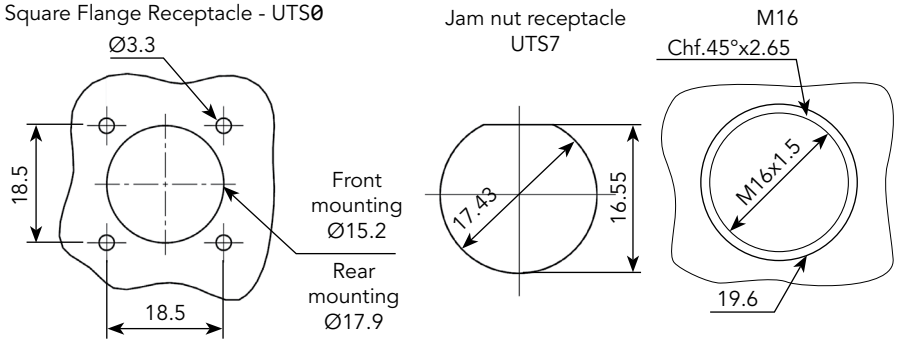


### Drilling Pattern

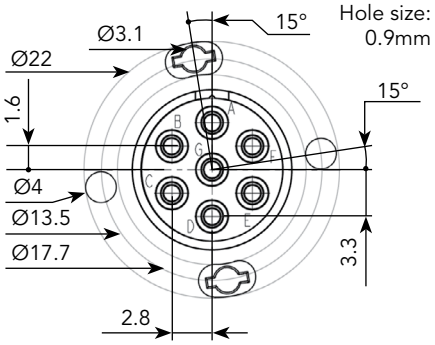


Note: Overmoulded cable assembly dimensions available page 179.

Note: all dimensions are in mm

# 10E7/10D7 (Shell size 10, 7x#20)

## Accessories and Tooling

### Jam Nut Sealing Caps

IP68/69K

| Part number |
|---|
| UTS10DCG |

IP68/69K Metal terminal

| Part number |
|---|
| UTS10DCGR |

### Plug Sealing Cap

IP68/69K

| Part number |
|---|
| UTS610DCG |

### Square Flange Sealing Cap

IP68/69K Metal terminal

| Part number |
|---|
| UTS10DCGE |

### Plastic Protective Cap

| Part numbers | |
|---|---|
| Receptacle cap | Plug cap |
| 85005586A | 85005595 |

### Gasket

| Part numbers |
|---|
| UTFD12B |

### Color Coding Rings

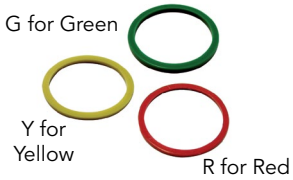


| Part numbers | |
|---|---|
| Receptacles | Plugs |
| UTS710CCRR | UTS610CCRR |
| UTS710CCRY | UTS610CCRY |
| UTS710CCRG | UTS610CCRG |

# 10E7/10D7 (Shell size 10, 7x#20)

## Contacts

| #20 | Contact type | Plating | Cable acceptance (AWG) | Wire stripping length |
|---|---|---|---|---|
| Handsolder | Loaded in the connector | Min 0.4µ gold over 0.8µ Ni | 22 to 18 | 3.8 mm |



## Electrical Characteristics

**UL**
6A 250V UL94 HB

**CSA**
6A 250V UL94 HB

**IEC**
7A 50V 1.5kV 3

## UTS 10E7/10D7 Derating Curves

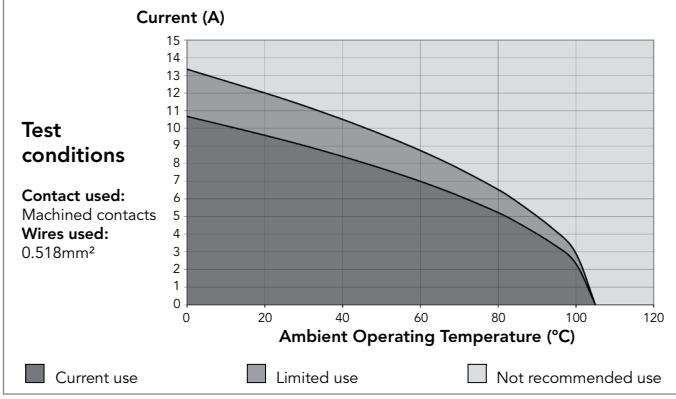

## 128 (Shell size 12, 8x#16)

# Connector Part Numbers

| Contact type | Connector type | Backshell | Part number | |
|---|---|---|---|---|
| | | | Male insert | Female insert |
| Crimp contacts supplied separately see page 103 | Square flange receptacle | Without (Fig. 1) | UTS0128P | UTS0128S |
| | Free hanging receptacle | Cable gland and grommet (Fig. 2) | UTS1GJC128P | - |
| | Free hanging receptacle | Nut and grommet (Fig. 3) | UTS1GN128P | - |
| | M20 threaded receptacle | Panel gasket and nut (Fig. 8) | UTS7128PM20NUT | UTS7128SM20NUT |
| | | Panel gasket (Fig. 9) | UTS7128PM20 | UTS7128SM20 |
| | Free hanging receptacle | Cable gland (Fig. 2) | UTS1JC128P | UTS1JC128S |
| | Plug | Without (Fig. 10) | UTS6128P | UTS6128S |
| | Plug | Cable gland and grommet (Fig. 11) | - | UTS6GJC128S |
| | Plug | Nut and grommet (Fig. 12) | - | UTS6GN128S |
| | Plug | Cable gland (Fig. 11) | UTS6JC128P | UTS6JC128S |
| | Jam nut receptacle | Without (Fig. 4) | UTS7128P | UTS7128S |
| | Jam nut receptacle | Cable gland and grommet (Fig. 7) | UTS7GJC128P | - |
| | Jam nut receptacle | Nut and grommet (Fig. 6) | UTS7GN128P | - |
| PCB contacts loaded see page 103 | Jam nut receptacle | With stand off and hold down clip (Fig. 5) | UTS7128PSEK9 | - |

Possibilities of discrimination/keying methods see page 208

# Overmoulded Cable Assembly Part Numbers

| Overmoulding type | Connector type | Wire size (mm²) | Harmonized cable part number (1) | Part number (length: 1m.)* | |
|---|---|---|---|---|---|
| | | | | Male plug | Female plug |
| Straight ending | Plug | 1.5 | H05 VV - F 8x1.5 | HAUTS0V128PST100 | HAUTS0V128SST100 |
| Right angle ending | Plug | 1.5 | H05 VV - F 8x1.5 | HAUTS0V128PRA100 | HAUTS0V128SRA100 |

(1) Other cable available on demand

* Other lengths available on demand

## 128 (Shell size 12, 8x#16)

# Dimensions

### Square Flange Receptacle - UTS0

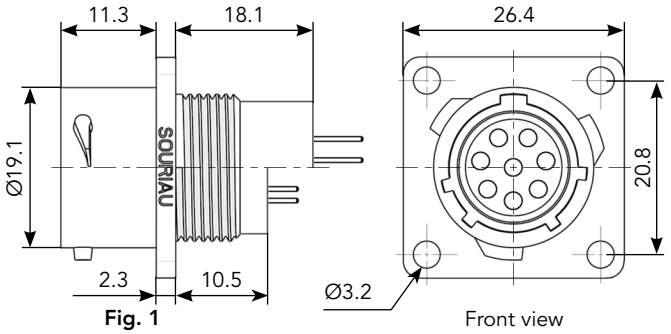


Fig. 1

### Free Hanging - UTS1

Fig. 2

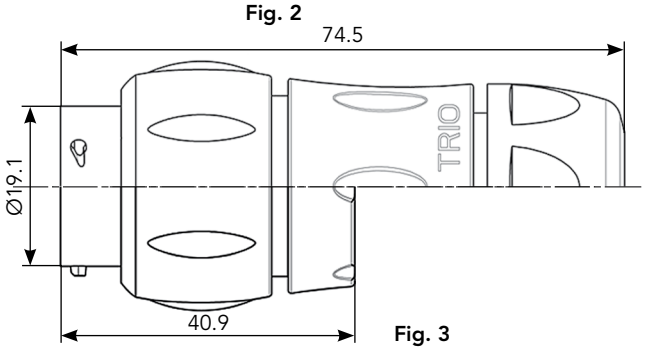


Fig. 3

### Jam Nut & M20 Threaded Receptacle - UTS7

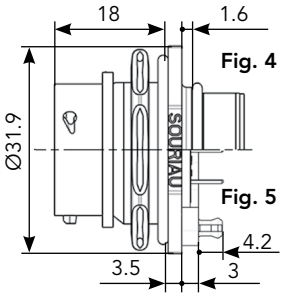


Fig. 4

Fig. 5

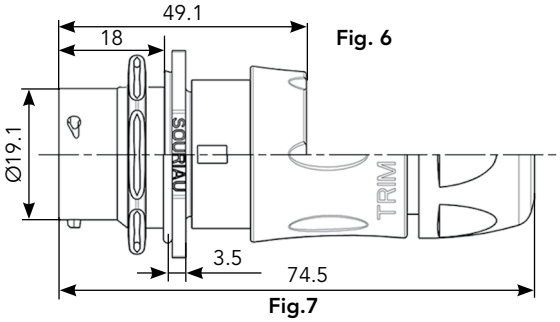


Fig. 6

Fig.7

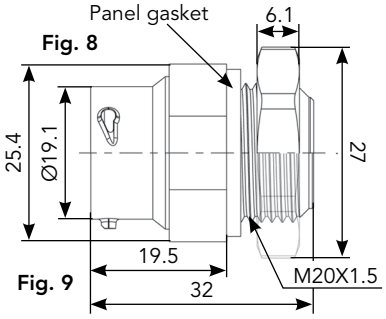


Fig. 8

Fig. 9

### Plug - UTS6

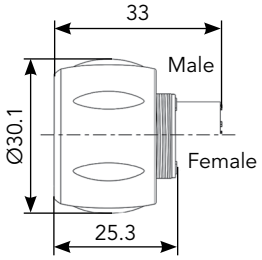


Fig. 10

Fig. 11

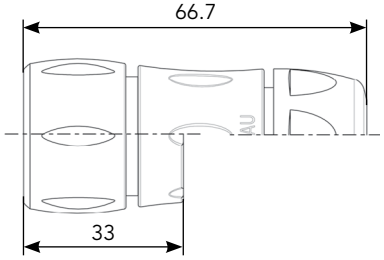


Fig. 12

### Mated Connector Lengths

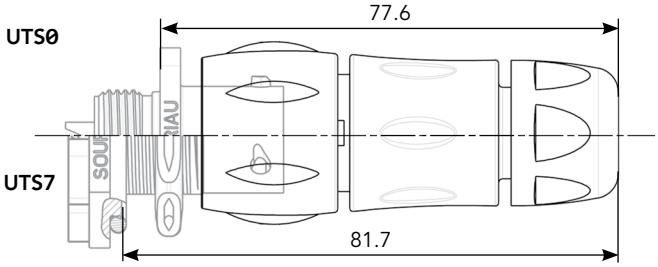


### Panel Cut Out

Square Flange Receptacle - UTS0

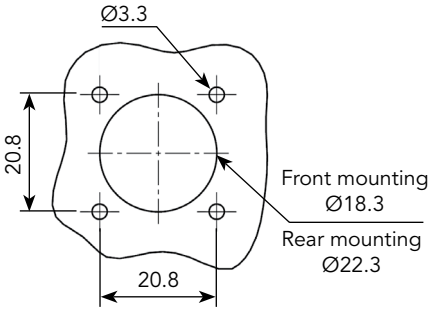


Jam Nut Receptacle - UTS7

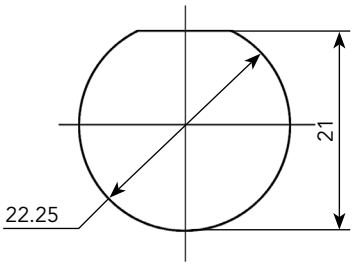


### Drilling Pattern

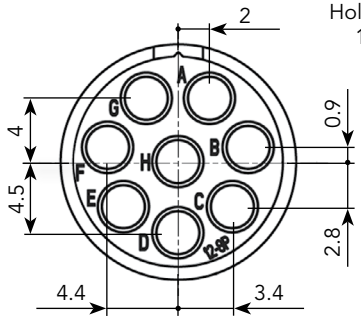


Note: Overmoulded cable assembly dimensions available page 179.

Note: all dimensions are in mm

## 128 (Shell size 12, 8x#16)

# Accessories and Tooling

### Jam Nut Sealing Caps

IP68/69K

| Part number |
|---|
| UTS12DCG |

IP68/69K Metal terminal

| Part number |
|---|
| UTS12DCGR |

### Handle (without Head)

| Part number |
|---|
| SHANDLES |

### Tool Kit

| Part number |
|---|
| TOOLKIT |

### Plug Sealing Cap

IP68/69K

| Part number |
|---|
| UTS612DCG |

### Square Flange Sealing Cap

IP68/69K Metal terminal

| Part number |
|---|
| UTS12DCGE |

### Crimp Tooling (without Shandles)

| Contacts | Contact size | Part number of head |
|---|---|---|
| RM/RC 28M1K(1) | Standard contacts #16 Ø 1.6mm | S16RCM20* |
| RM/RC 24M9K(1) | | S16RCM20* |
| RM/RC 20M13K(1) | | S16RCM20* |
| RM/RC 20M12K(1) | | S16RCM20* |
| RM/RC 16M23K(1) | | S16RCM16* |
| RM/RC 14M30K(1) | | S16RCM14* |
| SM/SC 24ML1TK6(1) | | S16SCM20* |
| SM/SC 20ML1TK6(1) | | S16SCM20* |
| SM/SC 16ML1TK6(1) | | S16SCML1* |
| SM/SC 14ML1TK6(1) | | S16SCML1* |
| SM/SC 16ML11TK6(1) | | S16SCML11* |
| RMDXK10D28K | Coaxial contacts | M10S1J with die set & stop bushing see page 200 to 204 |
| RCDXK1D28K | | |
| RM/RC DX60xxD28K | | |
| RM/RC DXK10D28 + york090 | | |
| RM/RC DX60xxD28 | | |

(1): Example of plating, for other plating options see page 164
* Heads to be used with handle PN: SHANDLES

### Plastic Protective Cap

| Part numbers | |
|---|---|
| Receptacle cap | Plug cap |
| 85005587A | 85005596 |

### Gasket

| Part numbers |
|---|
| UTFD13B |

### Color Coding Rings

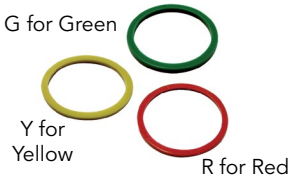


| Part numbers | |
|---|---|
| Receptacles | Plugs |
| UTS712CCRR | UTS612CCRR |
| UTS712CCRY | UTS612CCRY |
| UTS712CCRG | UTS612CCRG |

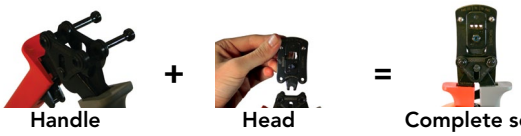


Handle Head Complete set

## 128 (Shell size 12, 8x#16)

# Contacts

| #16 | Contact type | AWG | Part number | | Max wire Ø | Max insulator Ø |
|---|---|---|---|---|---|---|
| | | | Male | Female | | |
| Crimp | Machined | 30-28 | RM28M1K(1) | RC28M1K(1) | 0.55 | 1.00 |
| | | 26-24 | RM24M9K(1) | RC24M9K(1) | 0.80 | 1.60 |
| | | 22-20 | RM20M13K(1) | RC20M13K(1) | 1.15 | 1.80 |
| | | 22-20 | RM20M12K(1) | RC20M12K(1) | 1.15 | 2.20 |
| | | 20-16 | RM16M23K(1) | RC16M23K(1) | 1.80 | 3.20 |
| | | 16-14 | RM14M30K(1) | RC14M30K(1) | 2.30 | 3.20 |
| | Stamped & Formed reeled contacts<br>See note (2) for loose piece | 26-24 | SM24M1TK6(1)(2) | SC24M1TK6(1)(2) | - | 0.90-1.60 |
| | | 22-20 | SM20M1TK6(1)(2) | SC20M1TK6(1)(2) | - | 1.20-2.10 |
| | | 18-16 | SM16M1TK6(1)(2) | SC16M1TK6(1)(2) | - | 3.20 |
| | | 18-16 | SM16M11TK6(1)(2) | SC16M11TK6(1)(2) | - | 3.00 |
| | | 14 | SM14M1TK6(1)(2) | SC14M1TK6(1)(2) | - | 3.20 |
| PCB | Machined (3) | - | RM20M12E83K(1) | RC20M12E84K(1) | - | - |
| Coaxial | Cable Multipiece | see pages 167, 200 to 206 | RMDXK10D28 | RCDXK1D28 | - | - |
| | Cable Monocrimp | | RMDX60xxD28 | RCDX60xxD28 | - | - |
| | Twisted pair Multipiece | | RMDXK10D28 + york090 | RCDXK1D28 + york090 | - | - |
| | Twisted pair Monocrimp | | RMDX60xxD28 | RCDX60xxD28 | - | - |
| Fiber optic | POF contacts<br>(Plastic Optical Fiber) | - | RMPOF1000 | RCPOF1000B | - | - |
| Hand-solder | Loaded in the connector | 14-18 | - | - | - | - |

(1): Example of plating, for other plating see page 164 (2): Loose piece contact available if putting L. Example: SM20ML1TK6 (3): For dimensions see page 168 Note: all dimensions are in mm

## Electrical Characteristics

**UL**
10A 500V UL94 V-0

**CSA**
7A 500V UL94 V-0

**IEC**
10A 80V 1.5kV 3

## UTS 128 Derating Curves

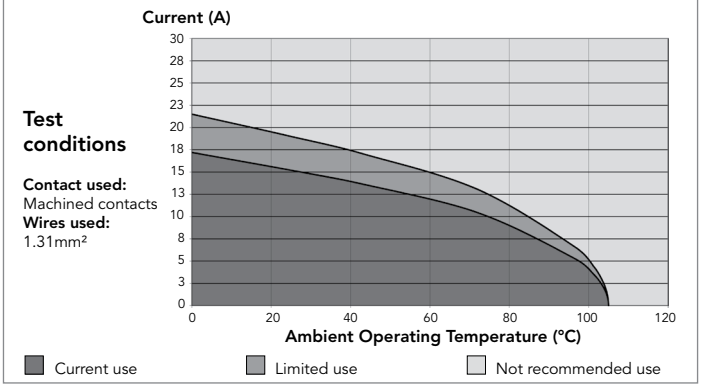

## 12E8/12D8 (Shell size 12, 8x#20)

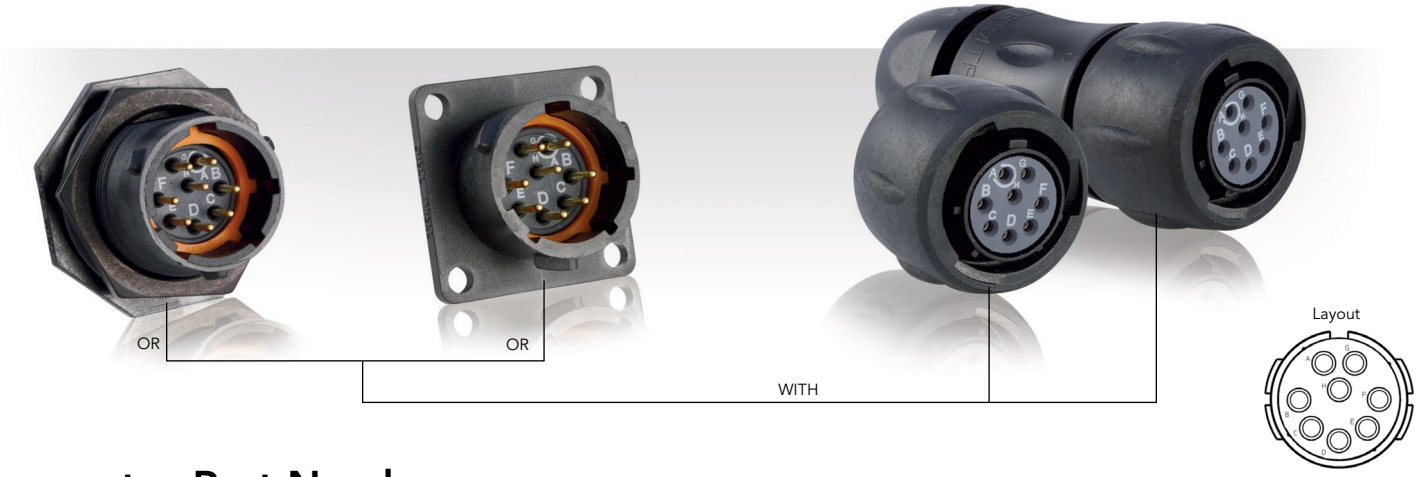


## Connector Part Numbers

| Contact type | Connector type | Backshell | Part number | |
|---|---|---|---|---|
| | | | Male insert | Female insert |
| Handsolder electrical contacts loaded see page 107 | Square flange receptacle | Without (Fig. 6) | UTS012E8P | UTS012E8S |
| | Plug | Without (Fig. 1) | UTS612E8P | UTS612E8S |
| | | Cable gland (Fig. 2) | UTS6JC12E8P | UTS6JC12E8S |
| | Jam nut receptacle | Without (Fig. 3) | UTS712E8P | UTS712E8S |
| PCB contacts loaded see page 107 | Square flange receptacle | Without (Fig. 7) | UTS012D8P | UTS012D8S |
| | Jam nut receptacle with stand off and with hold down clips | Without (Fig. 4) | UTS712D8P32 | UTS712D8S32 |
| | Jam nut receptacle with stand off and without hold down clip | Without (Fig. 5) | UTS712D8P | UTS712D8S |

Possibilities of discrimination/keying methods see page 208

Sealed unmated

## Overmoulded Cable Assembly Part Numbers

| Overmoulding type | Connector type | Wire size (mm²) | Harmonized cable part number (1) | Part number (length: 1m.)* | |
|---|---|---|---|---|---|
| | | | | Male plug | Female plug |
| Straight ending | Plug | 0.5 | H05 VV - F 8x0.5 | HAUTS0V12E8PST100 | HAUTS0V12E8SST100 |
| Right angle ending | Plug | 0.5 | H05 VV - F 8x0.5 | HAUTS0V12E8PRA100 | HAUTS0V12E8SRA100 |

(1) Other cable available on demand

* Other lengths available on demand

# 12E8/12D8 (Shell size 12, 8x#20)

## Dimensions

### Plug - UTS6

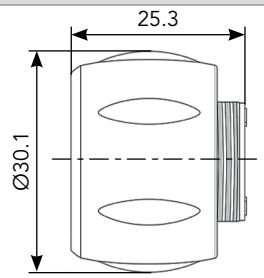


Fig. 1

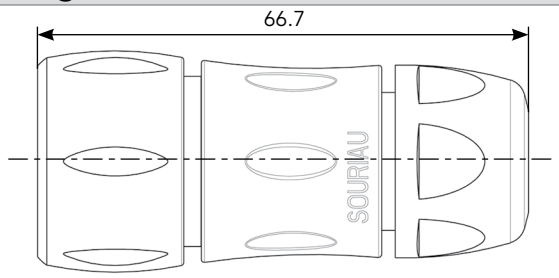


Fig. 2

### Jam Nut Receptacle - UTS7

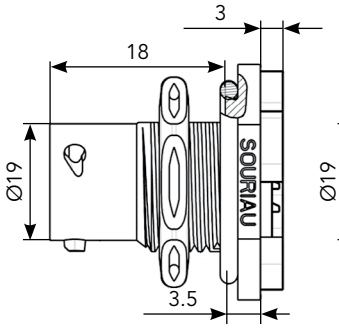


Fig. 3

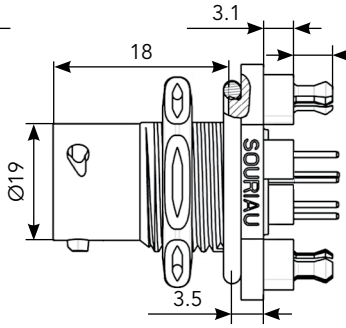


Fig. 4

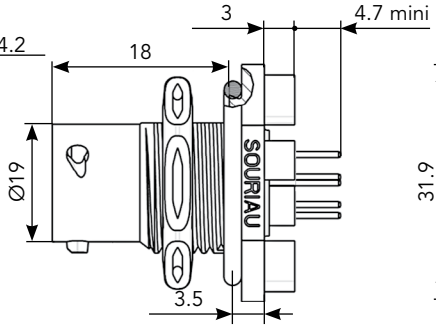


Fig. 5

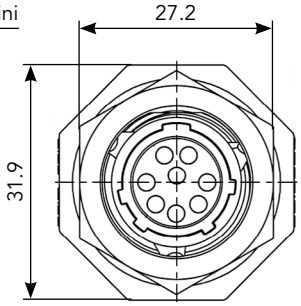


Front view

### Square Flange Receptacle - UTS0

Fig. 7

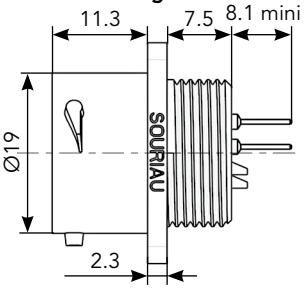


Fig. 6

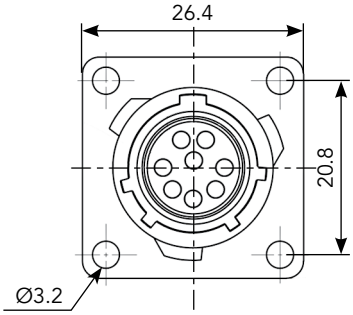


Front view

### Mated Connector Lengths

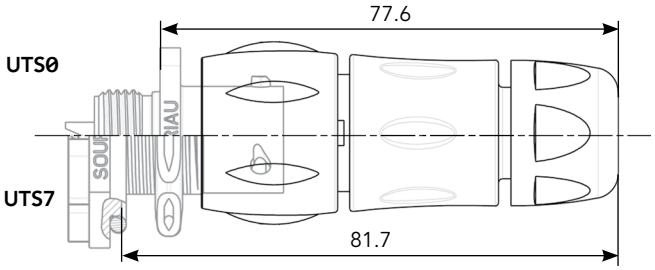


### Panel Cut Out

Square Flange Receptacle - UTS0

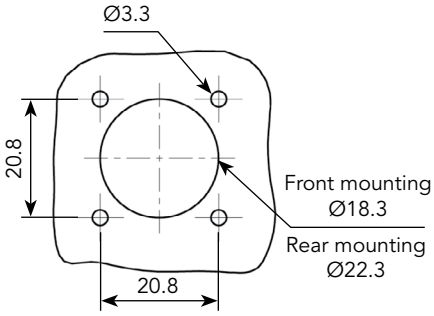


Jam Nut Receptacle - UTS7

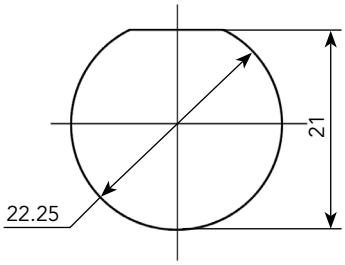


### Drilling Pattern

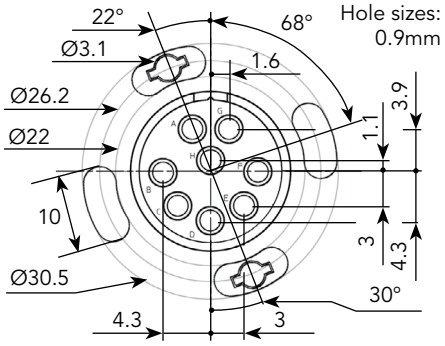


Note: Overmoulded cable assembly dimensions available page 179.

Note: all dimensions are in mm

## 12E8/12D8 (Shell size 12, 8x#20)

# Accessories and Tooling

### Jam Nut Sealing Caps

IP68/69K

| Part number |
|---|
| UTS12DCG |

IP68/69K Metal terminal

| Part number |
|---|
| UTS12DCGR |

### Plug Sealing Cap

IP68/69K

| Part number |
|---|
| UTS612DCG |

### Square Flange Sealing Cap

IP68/69K Metal terminal

| Part number |
|---|
| UTS12DCGE |

### Plastic Protective Cap

| Part numbers | |
|---|---|
| Receptacle cap | Plug cap |
| 85005587A | 85005596 |

### Gasket

| Part numbers |
|---|
| UTFD13B |

### Color Coding Rings

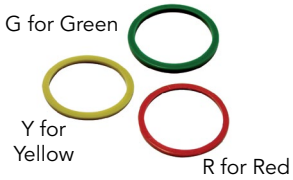


| Part numbers | |
|---|---|
| Receptacles | Plugs |
| UTS712CCRR | UTS612CCRR |
| UTS712CCRY | UTS612CCRY |
| UTS712CCRG | UTS612CCRG |

# 12E8/12D8 (Shell size 12, 8x#20)

## Contacts

| #20 | Contact type | Plating | Cable acceptance (AWG) | Wire stripping length |
|---|---|---|---|---|
| Handsolder | Loaded in the connector | Min 0.4µ gold over 0.8µ Ni | 22 to 18 | 5 mm |
| PCB | Machined (1) | Min 0.4µ gold over 0.8µ Ni | - | - |

(1): For dimensions see page 169



## Electrical Characteristics

**UL**
4.5A 250V UL94 HB

**CSA**
4.5A 250V UL94 HB

**IEC**
6A 32V 1.5kV 3

## UTS 12E8/12D8 Derating Curves

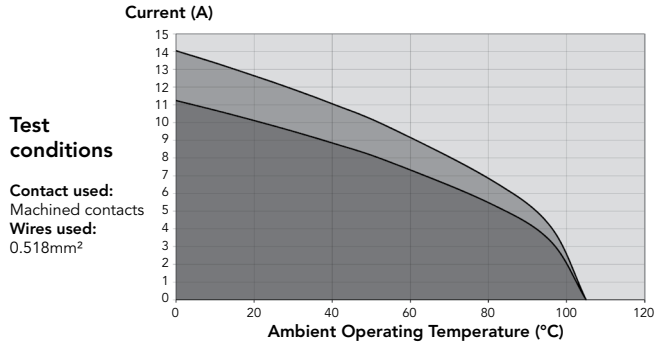


**Test conditions**

**Contact used:**
Machined contacts
**Wires used:**
0.518mm²

## 148 (Shell size 14, 4x#16, 4x#12)

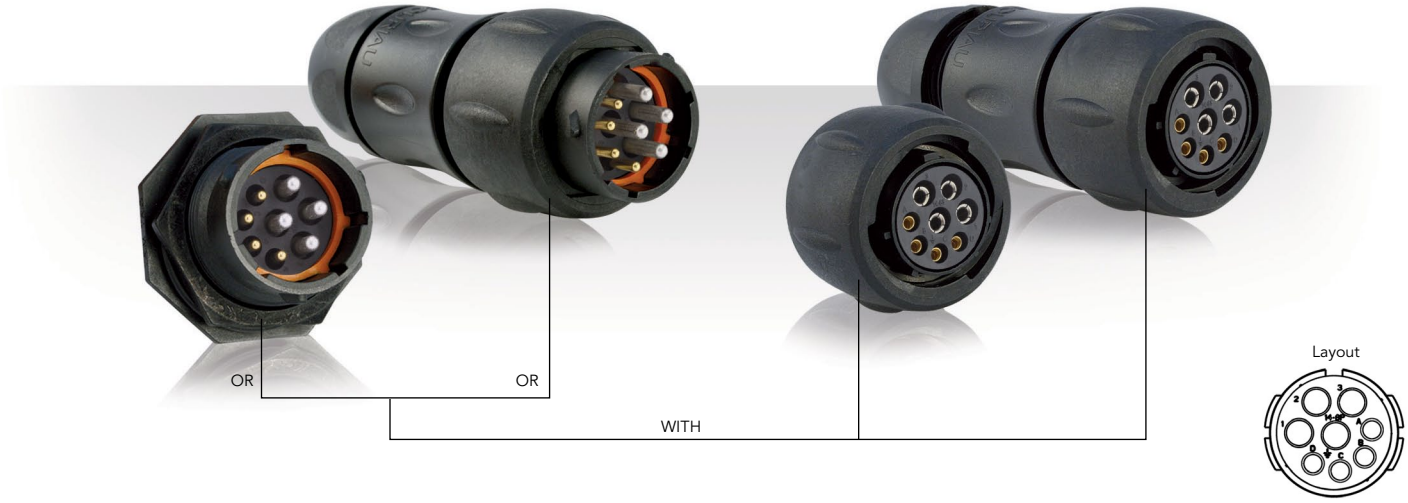


## Connector Part Numbers

| Contact type | Connector type | Backshell | Part number | |
|---|---|---|---|---|
| | | | Male insert | Female insert |
| Crimp contacts supplied separately see page 111 | Free hanging receptacle | Cable gland (Fig. 1) | **UTS1JC148P** | **UTS1JC148S** |
| | Plug | Without (Fig. 2) | **UTS6148P** | **UTS6148S** |
| | Plug | Cable gland (Fig. 3) | **UTS6JC148P** | **UTS6JC148S** |
| | Jam nut receptacle | Without (Fig. 4) | **UTS7148P** | **UTS7148S** |

## 148 (Shell size 14, 4x#16, 4x#12)

# Dimensions

### Free Hanging - UTS1

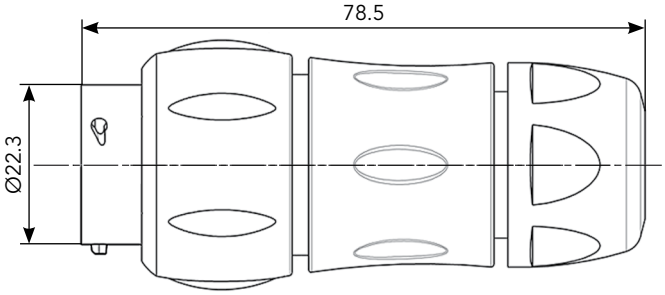


**Fig. 1**

### Plug - UTS6

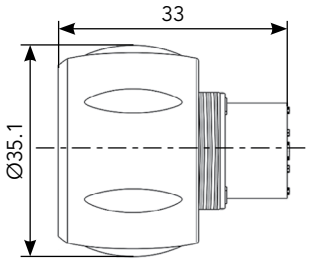


**Fig. 2** Male

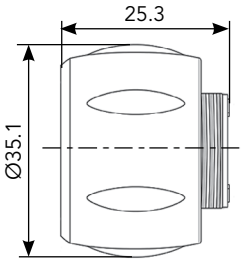


**Fig. 2** Female

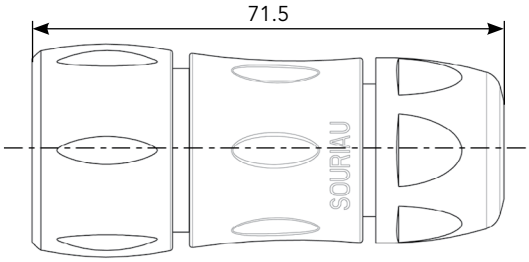


**Fig. 3**

### Jam Nut Receptacle - UTS7

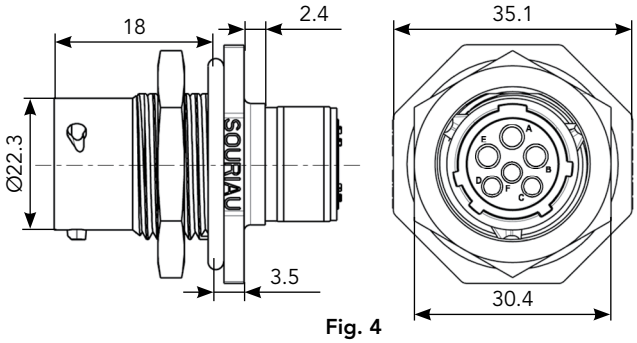


**Fig. 4**

### Mated Connector Length - UTS7

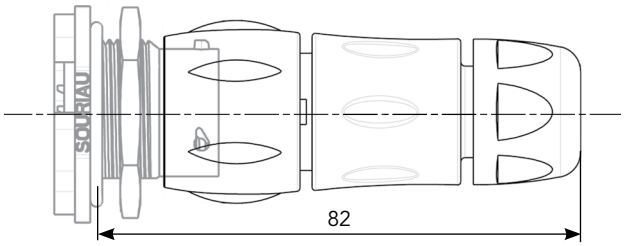


### Panel Cut Out

Jam Nut Receptacle - UTS7

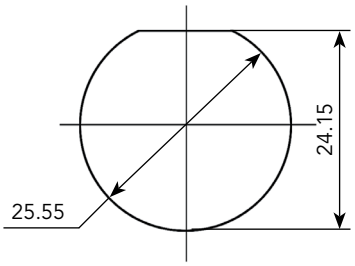


### Drilling Pattern

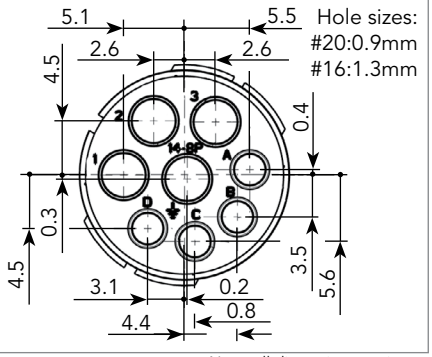


Hole sizes:
#20:0.9mm
#16:1.3mm

Note: all dimensions are in mm

## 148 (Shell size 14, 4x#16, 4x#12)

# Accessories and Tooling

### Jam Nut Sealing Caps

IP68/69K

| Part number |
|---|
| UTS14DCG |

IP68/69K Metal terminal

| Part number |
|---|
| UTS14DCGR |

### Plug Sealing Cap

IP68/69K

| Part number |
|---|
| UTS614DCG |

### Square Flange Sealing Cap

IP68/69K Metal terminal

| Part number |
|---|
| UTS14DCGE |

### Plastic Protective Cap

| Part numbers | |
|---|---|
| Receptacle cap | Plug cap |
| 85005588A | 85005597 |

### Gasket

| Part numbers |
|---|
| UTFD14B |

### Color Coding Rings

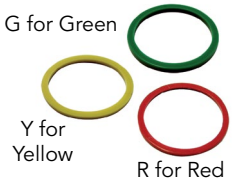


| Part numbers | |
|---|---|
| Receptacles | Plugs |
| UTS714CCRR | UTS614CCRR |
| UTS714CCRY | UTS614CCRY |
| UTS714CCRG | UTS614CCRG |

### Extraction Tool

| Part number Extraction tool #12 |
|---|
| 51060210924 |

| Part number Extraction tool #16 |
|---|
| VGE10078A |

### Crimp Tooling #16

| Part number |
|---|
| SHANDLES (without Head) |

| Part number |
|---|
| TOOLKIT |

HEAD (without Shandles)

| Contacts | Contact size | Part number of head |
|---|---|---|
| RM/RC 28M1K | Standard contacts #16 Ø 1.6mm | S16RCM20* |
| RM/RC 24M9K | | S16RCM20* |
| RM/RC 20M13K | | S16RCM20* |
| RM/RC 20M12K | | S16RCM20* |
| RM/RC 16M23K | | S16RCM16* |
| RM/RC 14M30K | | S16RCM14* |
| SM/SC 24ML1TK6(1) | | S16SCM20* |
| SM/SC 20ML1TK6(1) | | S16SCM20* |
| SM/SC 16ML1TK6(1) | | S16SCML1* |
| SM/SC 14ML1TK6(1) | | S16SCML1* |
| SM/SC 16ML11TK6(1) | | S16SCML11* |

(1): Example of plating, for other plating see page 164
*: Heads to be used with handle PN: SHANDLES

Handle

+

Head

=

Complete set

### Crimp Tooling #12

| Part number hand tool |
|---|
| M317 |

| Part number positioner + locator setting |
|---|
| VGE10078A |

## 148 (Shell size 14, 4x#16, 4x#12)

# Contacts

| #16 | Contact type | AWG | Part number | | Max wire Ø | Max insulator Ø |
|---|---|---|---|---|---|---|
| | | | Male | Female | | |
| Crimp | Machined | 30-28 | RM28M1K(1) | RC28M1K(1) | 0.55 | 1.00 |
| | | 26-24 | RM24M9K(1) | RC24M9K(1) | 0.80 | 1.60 |
| | | 22-20 | RM20M13K(1) | RC20M13K(1) | 1.15 | 1.80 |
| | | 22-20 | RM20M12K(1) | RC20M12K(1) | 1.15 | 2.20 |
| | | 20-16 | RM16M23K(1) | RC16M23K(1) | 1.80 | 3.20 |
| | | 16-14 | RM14M30K(1) | RC14M30K(1) | 2.30 | 3.20 |
| | Stamped & Formed reeled contacts<br>See note (2) for loose piece | 26-24 | SM24M1TK6(1)(2) | SC24M1TK6(1)(2) | - | 0.90-1.60 |
| | | 22-20 | SM20M1TK6(1)(2) | SC20M1TK6(1)(2) | - | 1.20-2.10 |
| | | 18-16 | SM16M1TK6(1)(2) | SC16M1TK6(1)(2) | - | 3.20 |
| | | 18-16 | SM16M11TK6(1)(2) | SC16M11TK6(1)(2) | - | 3.00 |
| | | 14 | SM14M1TK6(1)(2) | SC14M1TK6(1)(2) | - | 3.20 |
| Coaxial | Cable Multipiece | see pages 167, 200 to 206 | RMDXK10D28 | RCDXK1D28 | - | - |
| | Cable Monocrimp | | RMDX60xxD28 | RCDX60xxD28 | - | - |
| | Twisted pair Multipiece | | RMDXK10D28 + york090 | RCDXK1D28 + york090 | - | - |
| | Twisted pair Monocrimp | | RMDX60xxD28 | RCDX60xxD28 | - | - |
| #12 | | | | | | |
| Crimp | Machined | 22 | 82911457NA(1) | 82911456A(1) | 0.87 | 4.90 |
| | | 20 | 82911459NA(1) | 82911458A(1) | 1.12 | |
| | | 18 | 82911461NA(1) | 82911460A(1) | 1.42 | |
| | | 16 | 82911463NA(1) | 82911462A(1) | 1.72 | |
| | | 14 | 82911465NA(1) | 82911464A(1) | 2.22 | |
| | | 12 | 82911467NA(1) | 82911466A(1) | 2.82 | |

(1): Example of plating, for other plating see page 164 (2): Loose piece contact available if putting L. Example: SM20ML1TK6 Note: all dimensions are in mm

## Electrical Characteristics

**UL**
25A 250V UL94 V-0

**CSA**
17A 230V UL94 V-0

**IEC**
17A 230V 1.5kV 3

## UTS 148 Derating Curves

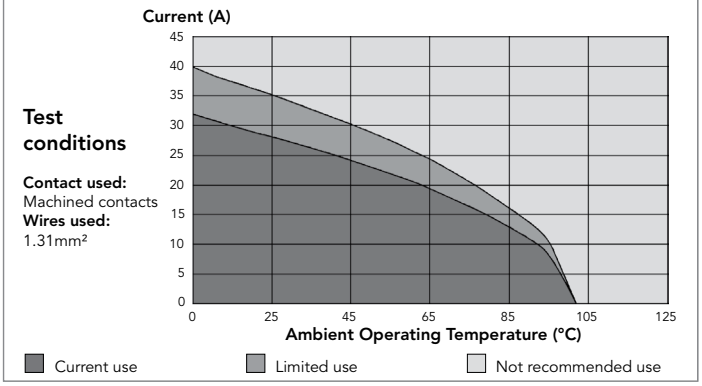

# 1210 - 12E10/12D10 (Shell size 12, 10x#20)

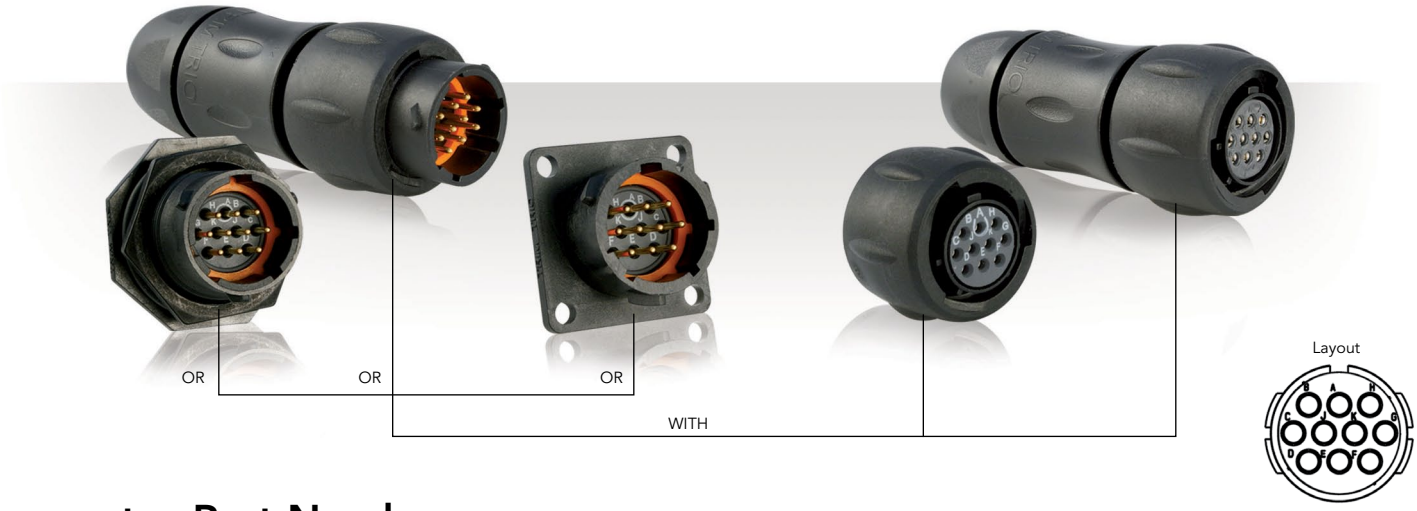


## Connector Part Numbers

| Contact type | Connector type | Backshell | Part number | |
|---|---|---|---|---|
| | | | Male insert | Female insert |
| Crimp contacts supplied separately see page 115 | Free hanging receptacle | Cable gland (Fig. 1) | UTS1JC1210P | UTS1JC1210S |
| | Plug | Without (Fig. 2) | UTS61210P | UTS61210S |
| | Plug | Cable gland (Fig. 3) | UTS6JC1210P | UTS6JC1210S |
| | Jam nut receptacle | Without (Fig. 4) | UTS71210P | UTS71210S |
| Handsolder electrical contacts loaded see page 115 | Square flange receptacle | Without (Fig. 6) | UTS012E10P | UTS012E10S |
| | Plug | Without (Fig. 2) | UTS612E10P | UTS612E10S |
| | | Cable gland (Fig. 3) | UTS6JC12E10P | UTS6JC12E10S |
| | Jam nut receptacle | Without (Fig. 5) | UTS712E10P | UTS712E10S |
| PCB contacts loaded see page 115 | Square flange receptacle | Without (Fig. 7) | UTS012D10P | UTS012D10S |
| | Jam nut receptacle with stand off and with hold down clips | Without (Fig. 6) | UTS712D10P32 | UTS712D10S32 |
| | Jam nut receptacle with stand off and without hold down clip | Without (Fig. 7) | UTS712D10P | UTS712D10S |

Possibilities of discrimination/keying methods see page 208

Sealed unmated

## Overmoulded Cable Assembly Part Numbers

| Overmoulding type | Connector type | Wire size (mm²) | Harmonized cable part number (1) | Part number (length: 1m.)* | |
|---|---|---|---|---|---|
| | | | | Male plug | Female plug |
| Straight ending | Plug | 0.5 | H05 VV - F 10x0.5 | HAUTS0V1210PST100 | HAUTS0V1210SST100 |
| | | | | HAUTS0V12E10PST100 | HAUTS0V12E10SST100 |
| Right angle ending | Plug | 0.5 | H05 VV - F 10x0.5 | HAUTS0V1210PRA100 | HAUTS0V1210SRA100 |
| | | | | HAUTS0V12E10PRA100 | HAUTS0V12E10SRA100 |

(1) Other cable available on demand

* Other lengths available on demand

# 1210 - 12E10/12D10 (Shell size 12, 10x#20)

## Dimensions

### Free Hanging - UTS1

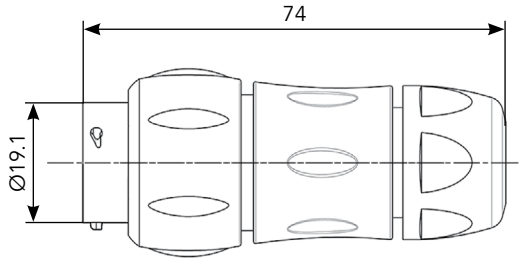


Fig. 1

### Plug - UTS6

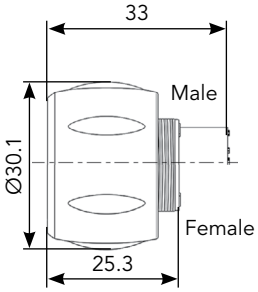


Fig. 2

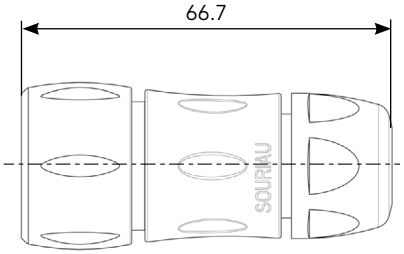


Fig. 3

### Jam Nut Receptacle - UTS7

Fig. 4

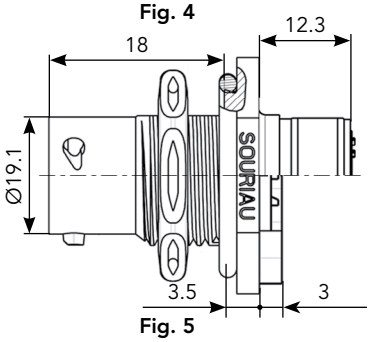


Fig. 5

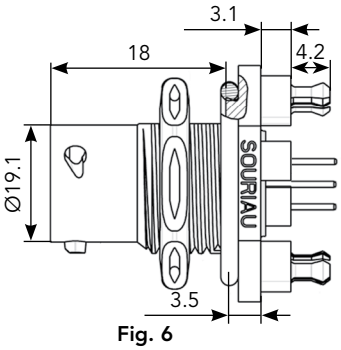


Fig. 6

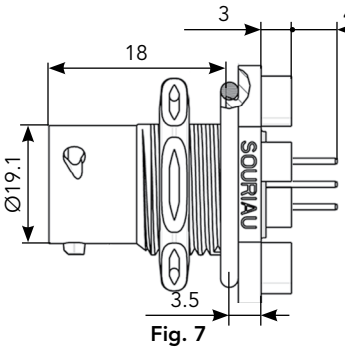


Fig. 7

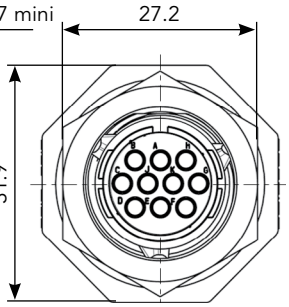


Front view

### Square Flange Receptacle - UTS0

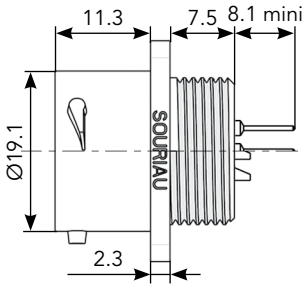


Fig. 8

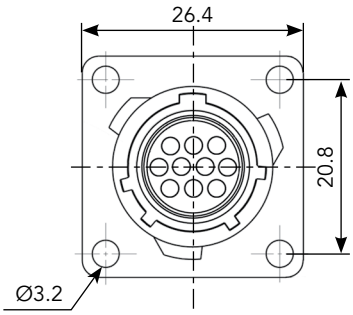


Front view

### Mated Connector Lengths

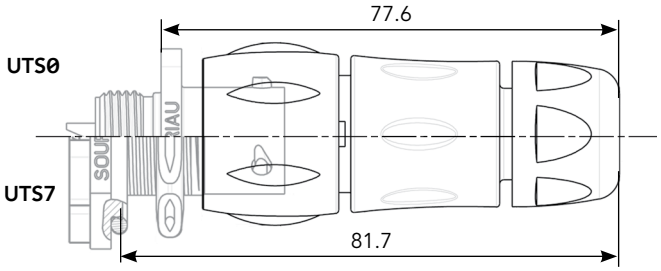


### Panel Cut Out

Square Flange Receptacle - UTS0

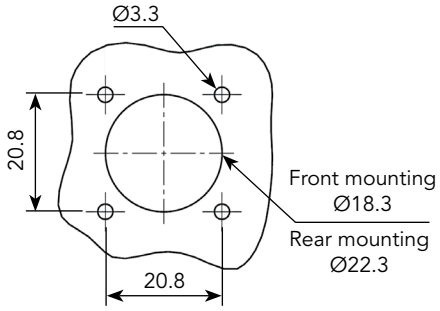


Jam Nut Receptacle - UTS7

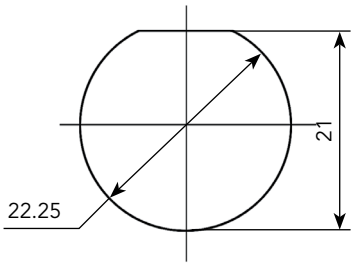


### Drilling Pattern

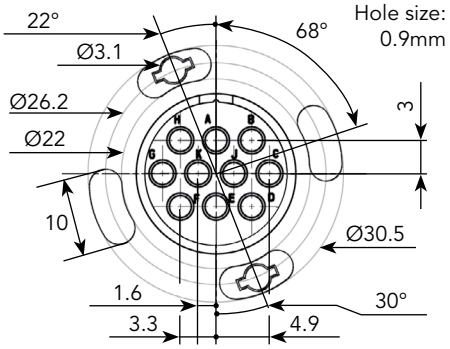


Note: Overmoulded cable assembly dimensions available page 179.

Note: all dimensions are in mm

# 1210 - 12E10/12D10 (Shell size 12, 10x#20)

## Accessories and Tooling

### Jam Nut Sealing Caps

IP68/69K

| Part number |
|---|
| UTS12DCG |

IP68/69K Metal terminal

| Part number |
|---|
| UTS12DCGR |

### Handle (without Head)

| Part number |
|---|
| SHANDLES |

### Tool Kit

| Part number |
|---|
| TOOLKIT |

### Plug Sealing Cap

IP68/69K

| Part number |
|---|
| UTS612DCG |

### Square Flange Sealing Cap

IP68/69K Metal terminal

| Part number |
|---|
| UTS12DCGE |

### Crimp Tooling (without Shandles)

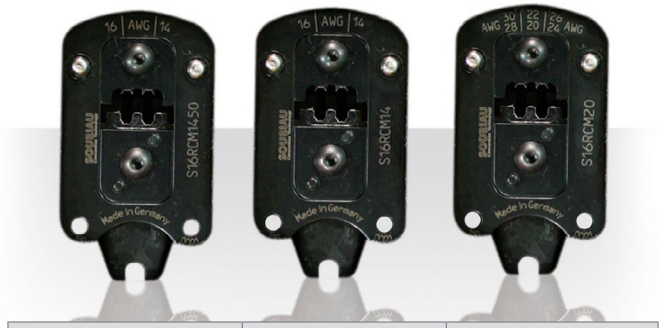


| Contacts | Contact size | Part number of head |
|---|---|---|
| RM/RC 24W3K(1) | Standard contacts<br>#20<br>Ø 1mm | S20RCM* |
| RM/RC 20W3K(1) | | S20RCM* |
| RM/RC 18W3K(1) | | S20RCM* |
| SM/SC 24WL3S | | S20SCM20* |
| SM/SC 20WL3S | | S20SCM20* |

(1): Example of plating, for other plating see page 164
*: Heads to be used with handle PN: SHANDLES

Handle

+

Head

=

Complete set

### Plastic Protective Cap

| Part numbers | |
|---|---|
| Receptacle cap | Plug cap |
| 85005587A | 85005596 |

### Gasket

| Part numbers |
|---|
| UTFD13B |

### Color Coding Rings

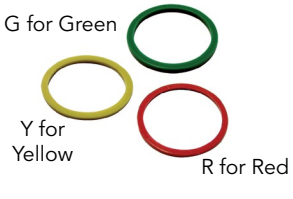


| Part numbers | |
|---|---|
| Receptacles | Plugs |
| UTS712CCRR | UTS612CCRR |
| UTS712CCRY | UTS612CCRY |
| UTS712CCRG | UTS612CCRG |

### Extraction Tool #20

| Part number |
|---|
| RX20D44 |

# 1210 - 12E10/12D10 (Shell size 12, 10x#20)

## Contacts

| #20 | Contact type | Wire size | | Part number | | Max wire Ø | Max insulator Ø |
|---|---|---|---|---|---|---|---|
| | | AWG | mm² | Male | Female | | |
| Crimp | Machined | 26-24 | 0.13-0.25 | RM24W3K(1) | RC24W3K(1) | 0.80 | 1.60 |
| | | 22-20 | 0.32-0.52 | RM20W3K(1) | RC20W3K(1) | 1.15 | 1.60 |
| | | 20-18 | 0.50-0.93 | RM18W3K(1) | RC18W3K(1) | 1.30 | 2.10 |
| | Stamped & Formed reeled contacts<br>See note (2) for loose piece | 26-24 | 0.13-0.25 | SM24W3TK6(2) | SC24W3TK6(2) | - | 0.90-1.60 |
| | | 26-24 | 0.13-0.25 | SM24W3S26(2) | SC24W3S25(2) | - | 0.90-1.60 |
| | | 22-20 | 0.32-0.52 | SM20W3TK6(2) | SC20W3TK6(2) | - | 1.20-2.10 |
| | | 22-20 | 0.32-0.52 | SM20W3S26(2) | SC20W3S25(2) | - | 1.20-2.10 |
| PCB | Machined (3) | - | - | RMW5016K | RCW5016K | - | - |

(1): Example of plating, for other plating see page 164 (2): Loose piece contact available if putting L. Example: SM20WL3TK6 (3): For dimensions see page 168 Note: all dimensions are in mm

| #20 | Contact type | Plating | Cable acceptance (AWG) | Wire stripping length |
|---|---|---|---|---|
| Handsolder | Loaded in the connector | Min 0.4µ gold over 0.8µ Ni | 22 to 18 | 3.8 mm |



## Electrical Characteristics

**UTS 1210**
**UL**
5A 250V UL94 V-0

**UTS 12E10/12D10**
**UL**
4.5A 250V UL94 HB

**CSA**
4A 250V UL94 V-0

**CSA**
4.5A 250V UL94 HB

**IEC**
6A 50V 1.5kV 3

## UTS 1210 - 12E10/12D10 Derating Curves

**Test conditions**

**Contact used:**
Machined contacts
**Wires used:**
0.518mm²

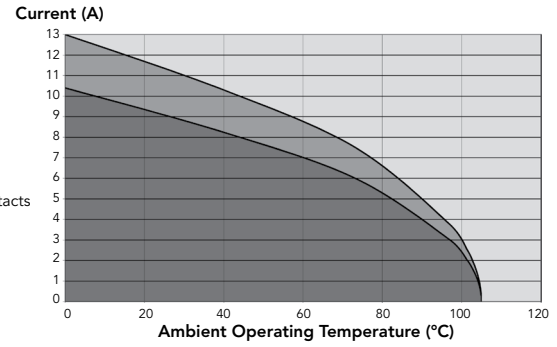

## 1412 (Shell size 14, 12x#16)

# Connector Part Numbers

| Contact type | Connector type | Backshell | Part number | |
|---|---|---|---|---|
| | | | Male insert | Female insert |
| Crimp contacts supplied separately see page 119 | Square flange receptacle | Without (Fig. 1) | UTS01412P | UTS01412S |
| | Free hanging receptacle | Cable gland and grommet (Fig. 2) | UTS1GJC1412P | - |
| | Free hanging receptacle | Nut and grommet (Fig. 3) | UTS1GN1412P | - |
| | Free hanging receptacle | Cable gland (Fig. 2) | UTS1JC1412P | UTS1JC1412S |
| | Plug | Without (Fig. 4) | UTS61412P | UTS61412S |
| | Plug | Cable gland and grommet (Fig. 5) | - | UTS6GJC1412S |
| | Plug | Nut and grommet (Fig. 6) | - | UTS6GN1412S |
| | Plug | Cable gland (Fig. 5) | UTS6JC1412P | UTS6JC1412S |
| | Jam nut receptacle | Without (Fig. 7) | UTS71412P | UTS71412S |
| | Jam nut receptacle | Cable gland and grommet (Fig. 9) | UTS7GJC1412P | - |
| | Jam nut receptacle | Nut and grommet (Fig. 8) | UTS7GN1412P | - |
| PCB contacts supplied separately see page 119 | Square flange receptacle | Without (Fig. 1) | UTS01412P | UTS01412S |
| | Jam nut receptacle | Without (Fig. 7) | UTS71412P | UTS71412S |

Possibilities of discrimination/keying methods see page 208

# Overmoulded Cable Assembly Part Numbers

| Overmoulding type | Connector type | Wire size (mm²) | Harmonized cable part number (1) | Part number (length: 1m.)* | |
|---|---|---|---|---|---|
| | | | | Male plug | Female plug |
| Straight ending | Plug | 1.5 | H05 VV - F 12x1.5 | HAUTS0V1412PST100 | HAUTS0V1412SST100 |
| Right angle ending | Plug | 1.5 | H05 VV - F 12x1.5 | HAUTS0V1412PRA100 | HAUTS0V1412SRA100 |

(1) Other cable available on demand

* Other lengths available on demand

# 1412 (Shell size 14, 12x#16)

## Dimensions

### Square Flange Receptacle - UTS0

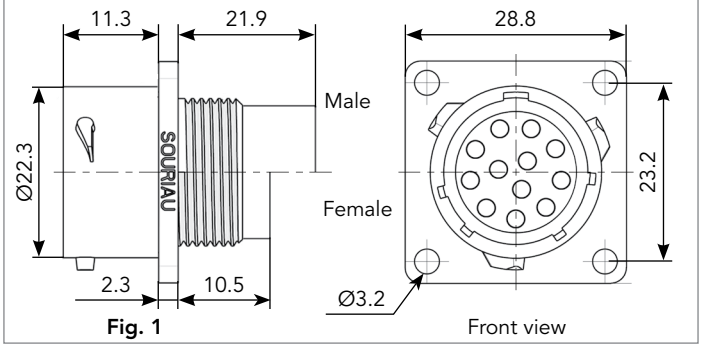


Fig. 1

### Free Hanging - UTS1

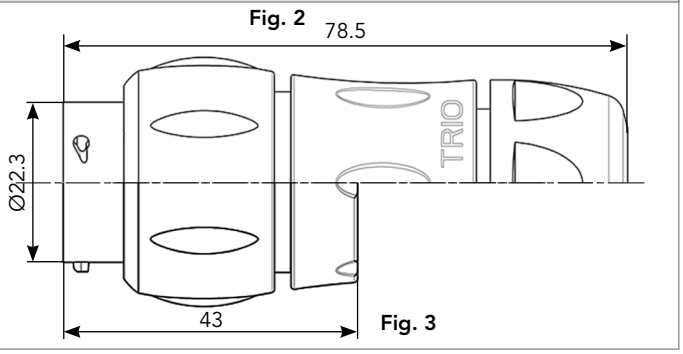


Fig. 2

Fig. 3

### Plug - UTS6

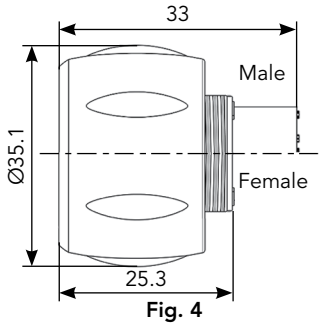


Fig. 4

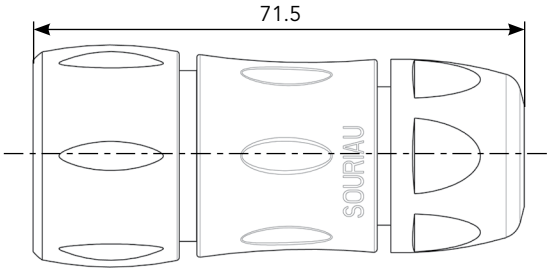


Fig. 5

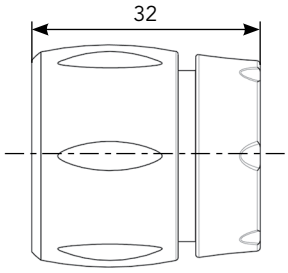


Fig. 6

### Jam Nut Receptacle - UTS7

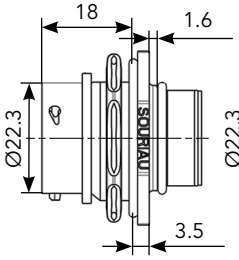


Fig. 7

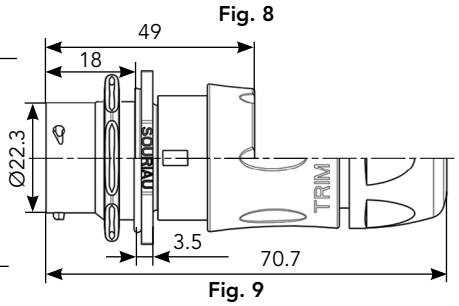


Fig. 8

Fig. 9

### Mated Connector Lengths

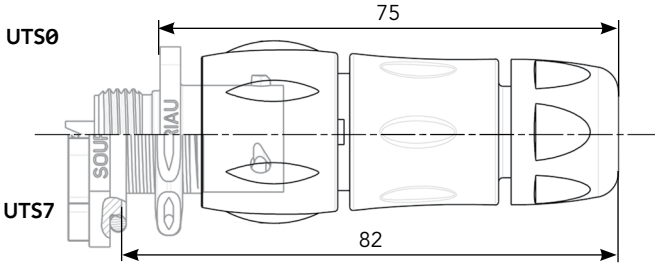


### Panel Cut Out

Square Flange Receptacle - UTS0

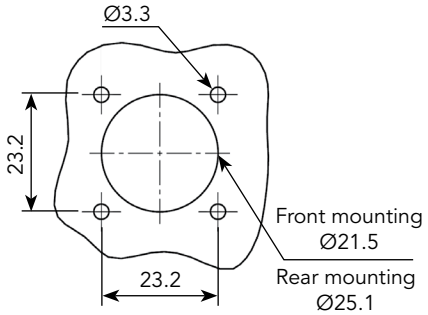


Jam Nut Receptacle - UTS7

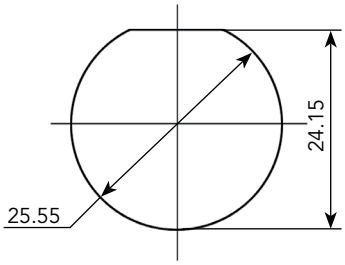


### Drilling Pattern

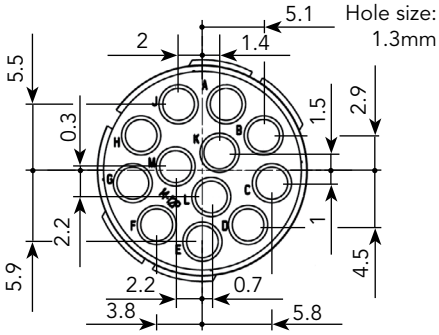


Note: Overmoulded cable assembly dimensions available page 179.

Note: all dimensions are in mm

# 1412 (Shell size 14, 12x#16)

## Accessories and Tooling

### Jam Nut Sealing Caps

IP68/69K

| Part number |
|---|
| UTS14DCG |

IP68/69K Metal terminal

| Part number |
|---|
| UTS14DCGR |

### Handle (without Head)

| Part number |
|---|
| SHANDLES |

### Tool Kit

| Part number |
|---|
| TOOLKIT |

### Plug Sealing Cap

IP68/69K

| Part number |
|---|
| UTS614DCG |

### Square Flange Sealing Cap

IP68/69K Metal terminal

| Part number |
|---|
| UTS14DCGE |

### Plastic Protective Cap

| Part numbers | |
|---|---|
| Receptacle cap | Plug cap |
| 85005588A | 85005597 |

### Gasket

| Part numbers |
|---|
| UTFD14B |

### Color Coding Rings

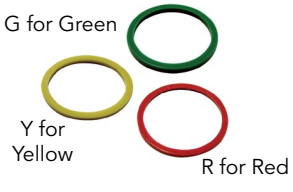


| Part numbers | |
|---|---|
| Receptacles | Plugs |
| UTS714CCRR | UTS614CCRR |
| UTS714CCRY | UTS614CCRY |
| UTS714CCRG | UTS614CCRG |

### Crimp Tooling (without Shandles)

| Contacts | Contact size | Part number of head |
|---|---|---|
| RM/RC 28M1K(1) | Standard contacts #16 Ø 1.6mm | S16RCM20* |
| RM/RC 24M9K(1) | | S16RCM20* |
| RM/RC 20M13K(1) | | S16RCM20* |
| RM/RC 20M12K(1) | | S16RCM20* |
| RM/RC 16M23K(1) | | S16RCM16* |
| RM/RC 14M30K(1) | | S16RCM14* |
| SM/SC 24ML1TK6(1) | | S16SCM20* |
| SM/SC 20ML1TK6(1) | | S16SCM20* |
| SM/SC 16ML1TK6(1) | | S16SCML1* |
| SM/SC 14ML1TK6(1) | | S16SCML1* |
| SM/SC 16ML11TK6(1) | | S16SCML11* |
| RMDXK10D28K | Coaxial contacts | M10S1J with die set & stop bushing see page 200 to 204 |
| RCDXK1D28K | | |
| RM/RC DX60xxD28K | | |
| RM/RC DXK10D28 + york090 | | |
| RM/RC DX60xxD28 | | |

(1): Example of plating, for other plating options see page 164
* Heads to be used with handle PN: SHANDLES

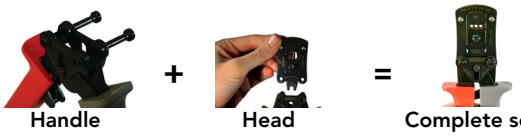


Handle Head Complete set

## 1412 (Shell size 14, 12x#16)

# Contacts

| #16 | Contact type | AWG | Part number | | Max wire Ø | Max insulator Ø |
|---|---|---|---|---|---|---|
| | | | Male | Female | | |
| Crimp | Machined | 30-28 | RM28M1K(1) | RC28M1K(1) | 0.55 | 1.00 |
| | | 26-24 | RM24M9K(1) | RC24M9K(1) | 0.80 | 1.60 |
| | | 22-20 | RM20M13K(1) | RC20M13K(1) | 1.15 | 1.80 |
| | | 22-20 | RM20M12K(1) | RC20M12K(1) | 1.15 | 2.20 |
| | | 20-16 | RM16M23K(1) | RC16M23K(1) | 1.80 | 3.20 |
| | | 16-14 | RM14M30K(1) | RC14M30K(1) | 2.30 | 3.20 |
| | Stamped & Formed reeled contacts<br>See note (2) for loose piece | 26-24 | SM24M1TK6(1)(2) | SC24M1TK6(1)(2) | - | 0.90-1.60 |
| | | 22-20 | SM20M1TK6(1)(2) | SC20M1TK6(1)(2) | - | 1.20-2.10 |
| | | 18-16 | SM16M1TK6(1)(2) | SC16M1TK6(1)(2) | - | 3.20 |
| | | 18-16 | SM16M11TK6(1)(2) | SC16M11TK6(1)(2) | - | 3.00 |
| | | 14 | SM14M1TK6(1)(2) | SC14M1TK6(1)(2) | - | 3.20 |
| PCB | Machined (3) | - | RM20M12E83K(1) | RC20M12E84K(1) | - | - |
| Coaxial | Cable Multipiece | see pages 167, 200 to 206 | RMDXK10D28 | RCDXK1D28 | - | - |
| | Cable Monocrimp | | RMDX60xxD28 | RCDX60xxD28 | - | - |
| | Twisted pair Multipiece | | RMDXK10D28 + york090 | RCDXK1D28 + york090 | - | - |
| | Twisted pair Monocrimp | | RMDX60xxD28 | RCDX60xxD28 | - | - |
| Fiber optic | POF contacts<br>(Plastic Optical Fiber) | - | RMPOF1000 | RCPOF1000B | - | - |
| Hand-solder | Loaded in the connector | 14-18 | - | - | | |

(1): Example of plating, for other plating see page 164 (2): Loose piece contact available if putting L. Example: SM20ML1TK6 (3): For dimensions see page 168 Note: all dimensions are in mm

## Electrical Characteristics

**UL**
10A 600V UL94 V-0

**CSA**
7A 600V UL94 V-0

**IEC**
10A 63V 1.5kV 3

## UTS 1412 Derating Curves

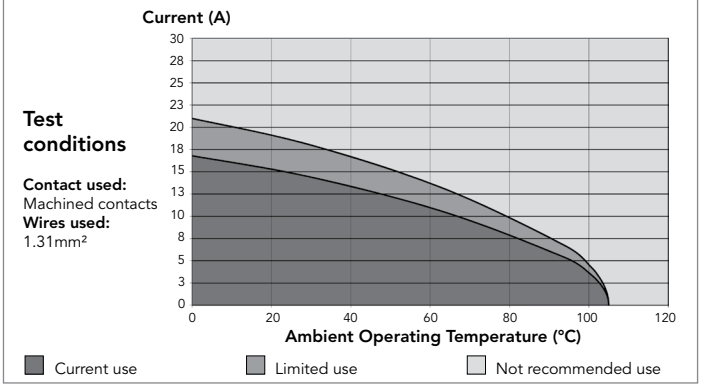

## 14E12/14D12 (Shell size 14, 8x#20, 4x#16)

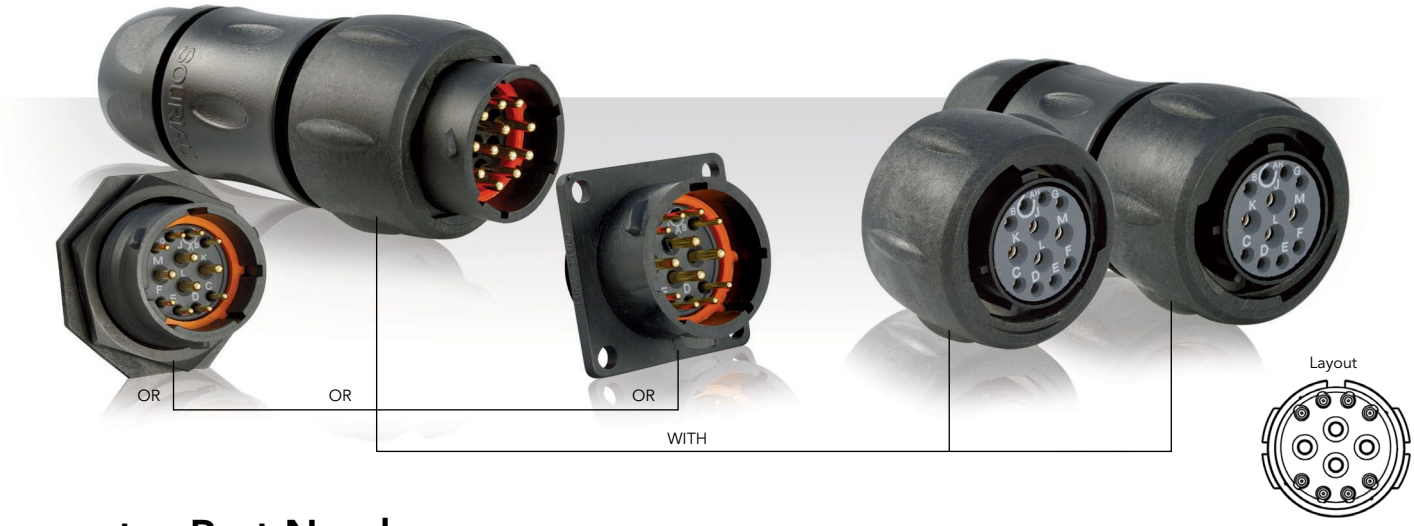


## Connector Part Numbers

| Contact type | Connector type | Backshell | Part number | |
|---|---|---|---|---|
| | | | Male insert | Female insert |
| Handsolder electrical contacts loaded see page 123 | Square flange receptacle | Without (Fig. 6) | UTS014E12P | UTS014E12S |
| | Plug | Without (Fig. 1) | UTS614E12P | UTS614E12S |
| | | Cable gland (Fig. 2) | UTS6JC14E12P | UTS6JC14E12S |
| | Jam nut receptacle | Without (Fig. 3) | UTS714E12P | UTS714E12S |
| PCB contacts loaded see page 123 | Square flange receptacle | Without (Fig. 6) | UTS014D12P | UTS014D12S |
| | Jam nut receptacle with stand off and with hold down clips | Without (Fig. 4) | UTS714D12P32 | UTS714D12S32 |
| | Jam nut receptacle with stand off and without hold down clip | Without (Fig. 5) | UTS714D12P | UTS714D12S |

Possibilities of discrimination/keying methods see page 208

Sealed unmated

## Overmoulded Cable Assembly Part Numbers

| Overmoulding type | Connector type | Wire size (mm²) | Harmonized cable part number (1) | Part number (length: 1m.)* | |
|---|---|---|---|---|---|
| | | | | Male plug | Female plug |
| Straight ending | Plug | 1.5 | H05 VV - F 12x1.5 | HAUTS0V14E12PST100 | HAUTS0V14E12SST100 |
| Right angle ending | Plug | 1.5 | H05 VV - F 12x1.5 | HAUTS0V14E12PRA100 | HAUTS0V14E12SRA100 |

(1) Other cable available on demand

* Other lengths available on demand

# 14E12/14D12 (Shell size 14, 8x#20, 4x#16)

## Dimensions

### Plug - UTS6

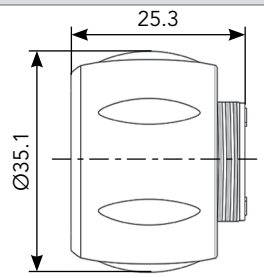


Fig. 1

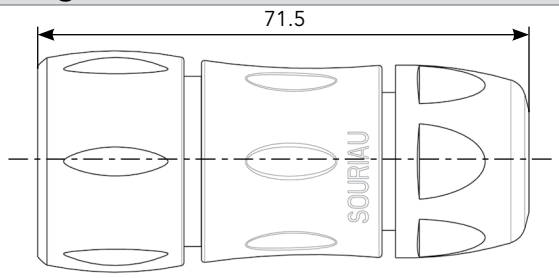


Fig. 2

### Jam Nut Receptacle - UTS7

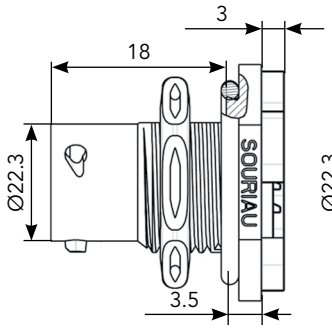


Fig. 3

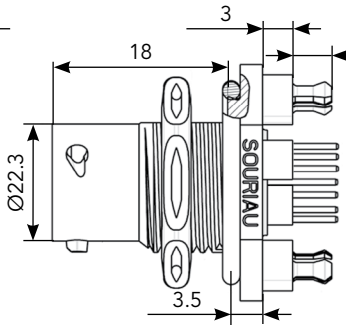


Fig. 4

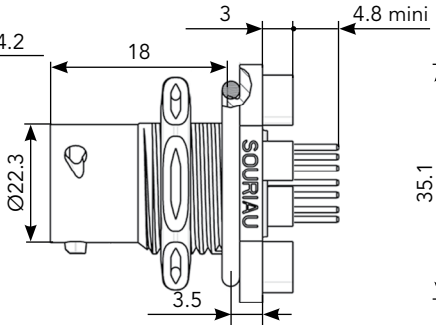


Fig. 5

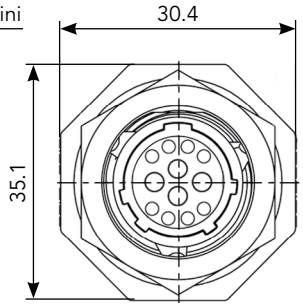


Front view

### Square Flange Receptacle - UTS0

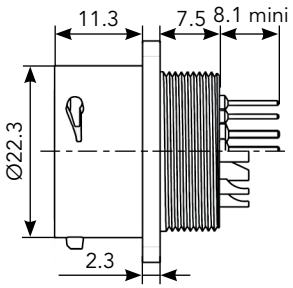


Fig. 6

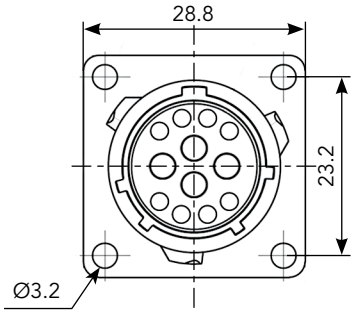


Front view

### Mated Connector Lengths

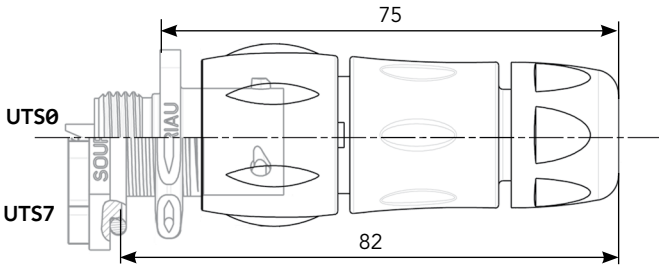


### Panel Cut Out

Square Flange Receptacle - UTS0

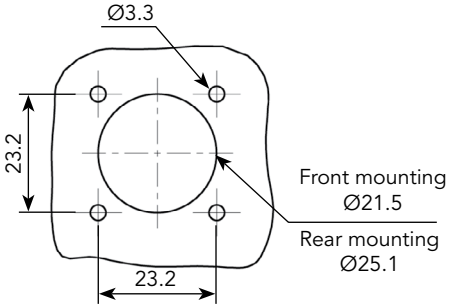


Jam Nut Receptacle - UTS7

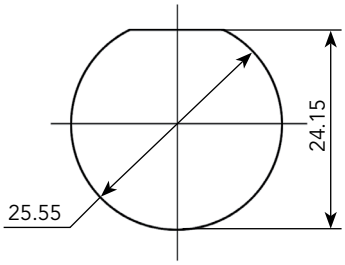


### Drilling Pattern

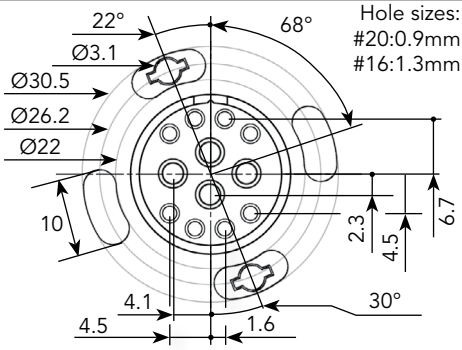


Note: Overmoulded cable assembly dimensions available page 179.

Note: all dimensions are in mm

# 14E12/14D12 (Shell size 14, 8x#20, 4x#16)

## Accessories and Tooling

### Jam Nut Sealing Caps

IP68/69K

| Part number |
|---|
| UTS14DCG |

IP68/69K Metal terminal

| Part number |
|---|
| UTS14DCGR |

### Plug Sealing Cap

IP68/69K

| Part number |
|---|
| UTS614DCG |

### Square Flange Sealing Cap

IP68/69K Metal terminal

| Part number |
|---|
| UTS14DCGE |

### Plastic Protective Cap

| Part numbers | |
|---|---|
| Receptacle cap | Plug cap |
| 85005588A | 85005597 |

### Gasket

| Part numbers |
|---|
| UTFD14B |

### Color Coding Rings

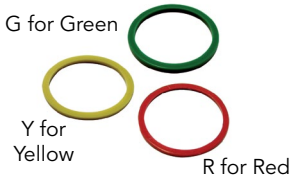


| Part numbers | |
|---|---|
| Receptacles | Plugs |
| UTS714CCRR | UTS614CCRR |
| UTS714CCRY | UTS614CCRY |
| UTS714CCRG | UTS614CCRG |

# 14E12/14D12 (Shell size 14, 8x#20, 4x#16)

## Contacts

| #16 | Contact type | Plating | Cable acceptance (AWG) | Wire stripping length |
|---|---|---|---|---|
| Handsolder | Loaded in the connector | Min 0.4µ gold over 0.8µ Ni | 18 to 14 | 5.0 mm |
| PCB | Machined (1) | Min 0.4µ gold over 0.8µ Ni | - | - |

| #20 | Contact type | Plating | Cable acceptance (AWG) | Wire stripping length |
|---|---|---|---|---|
| Handsolder | Loaded in the connector | Min 0.4µ gold over 0.8µ Ni | 22 to 18 | 3.8 mm |
| PCB | Machined (1) | Min 0.4µ gold over 0.8µ Ni | - | - |

(1): For dimensions see page 169



## Electrical Characteristics

**UL**
4.5A 250V UL94 HB

**CSA**
4.5A 250V UL94 HB

**IEC**
4A 50V 1.5kV 3

## UTS 14E12/14D12 Derating Curves

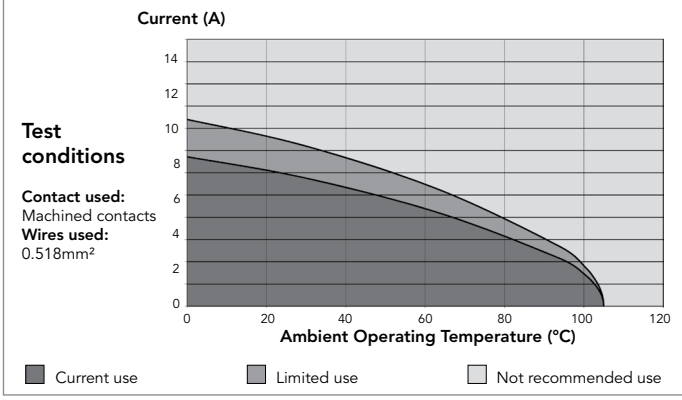

## 1492 (Shell size 14, 12x#16)

# Connector Part Numbers

| Contact type | Connector type | Backshell | Part number | |
|---|---|---|---|---|
| | | | Male insert | Female insert |
| Crimp contacts supplied separately see page 127 | Square flange receptacle | Without (Fig. 1) | **UTS01492P** | **UTS01492S** |
| | Free hanging receptacle | Cable gland and grommet (Fig. 2) | **UTS1GJC1492P** | **-** |
| | Free hanging receptacle | Nut and grommet (Fig. 3) | **UTS1GN1492P** | **-** |
| | Free hanging receptacle | Cable gland (Fig. 2) | **UTS1JC1492P** | **UTS1JC1492S** |
| | Plug | Without (Fig. 4) | **UTS61492P** | **UTS61492S** |
| | Plug | Cable gland and grommet (Fig. 5) | **-** | **UTS6GJC1492S** |
| | Plug | Nut and grommet (Fig. 6) | **-** | **UTS6GN1492S** |
| | Plug | Cable gland (Fig. 5) | **UTS6JC1492P** | **UTS6JC1492S** |
| | Jam nut receptacle | Without (Fig. 7) | **UTS71492P** | **UTS71492S** |
| | Jam nut receptacle | Cable gland and grommet (Fig. 9) | **UTS7GJC1492P** | **-** |
| | Jam nut receptacle | Nut and grommet (Fig. 8) | **UTS7GN1492P** | **-** |
| PCB contacts supplied separately see page 127 | Square flange receptacle | Without (Fig. 1) | **UTS01492P** | **UTS01492S** |
| | Jam nut receptacle | Without (Fig. 7) | **UTS71492P** | **UTS71492S** |

Possibilities of discrimination/keying methods see page 208

# 1492 (Shell size 14, 12x#16)

## Dimensions

### Square Flange Receptacle - UTS0

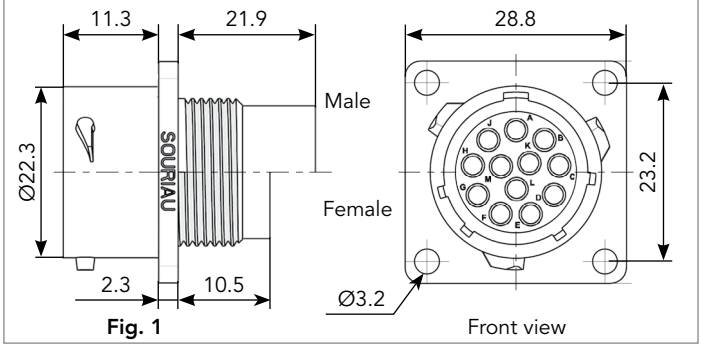


Fig. 1

### Free Hanging - UTS1

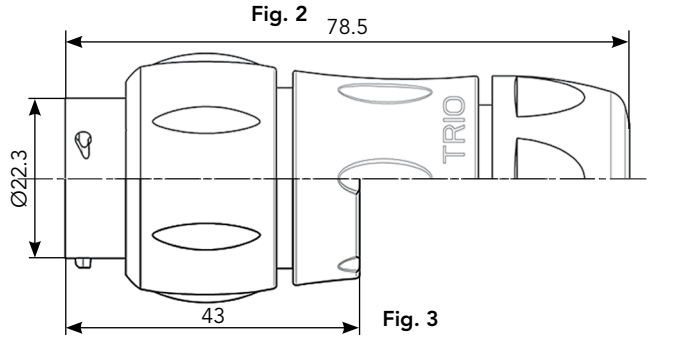


Fig. 2

Fig. 3

### Plug - UTS6

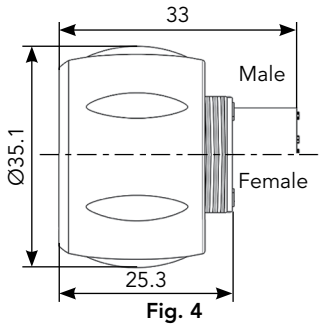


Fig. 4

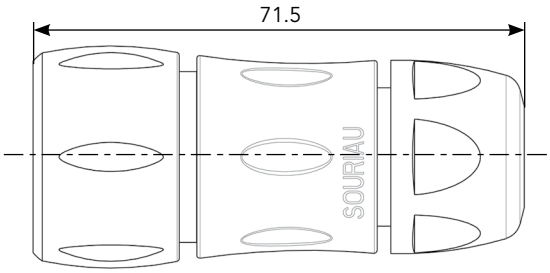


Fig. 5

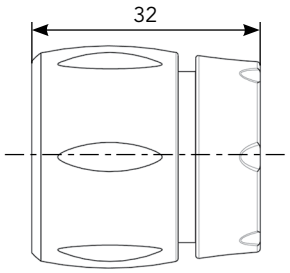


Fig. 6

### Jam Nut Receptacle - UTS7

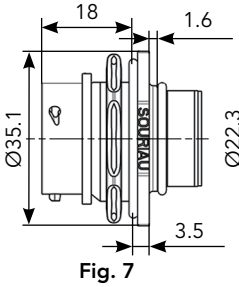


Fig. 7

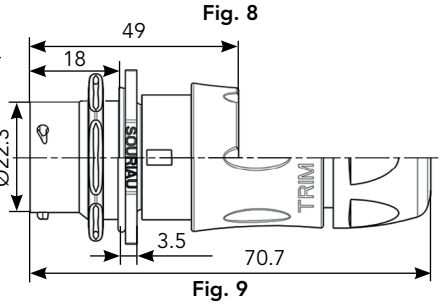


Fig. 8

Fig. 9

### Mated Connector Lengths

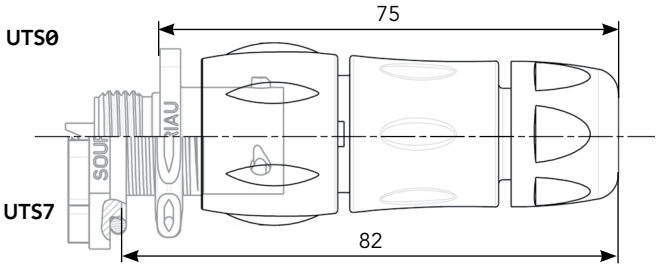


### Panel Cut Out

Square Flange Receptacle - UTS0

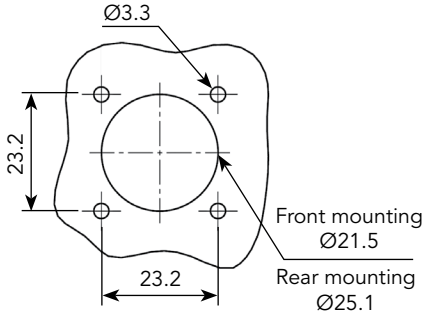


Jam Nut Receptacle - UTS7

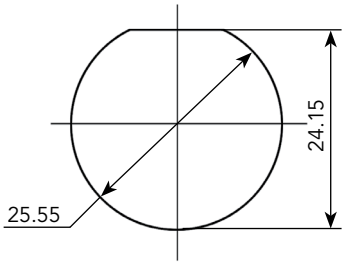


### Drilling Pattern

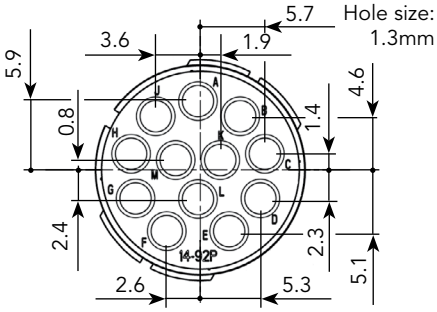


Note: all dimensions are in mm

# 1492 (Shell size 14, 12x#16)

## Accessories and Tooling

### Jam Nut Sealing Caps

IP68/69K

| Part number |
|---|
| UTS14DCG |

IP68/69K Metal terminal

| Part number |
|---|
| UTS14DCGR |

### Handle (without Head)

| Part number |
|---|
| SHANDLES |

### Tool Kit

| Part number |
|---|
| TOOLKIT |

### Plug Sealing Cap

IP68/69K

| Part number |
|---|
| UTS614DCG |

### Square Flange Sealing Cap

IP68/69K Metal terminal

| Part number |
|---|
| UTS14DCGE |

### Plastic Protective Cap

| Part numbers | |
|---|---|
| Receptacle cap | Plug cap |
| 85005588A | 85005597 |

### Gasket

| Part numbers |
|---|
| UTFD14B |

### Color Coding Rings

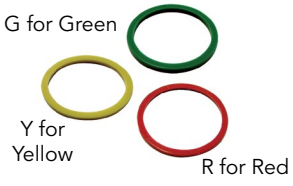


| Part numbers | |
|---|---|
| Receptacles | Plugs |
| UTS714CCRR | UTS614CCRR |
| UTS714CCRY | UTS614CCRY |
| UTS714CCRG | UTS614CCRG |

### Crimp Tooling (without Shandles)

| Contacts | Contact size | Part number of head |
|---|---|---|
| RM/RC 28M1K(1) | Standard contacts #16 Ø 1.6mm | S16RCM20* |
| RM/RC 24M9K(1) | | S16RCM20* |
| RM/RC 20M13K(1) | | S16RCM20* |
| RM/RC 20M12K(1) | | S16RCM20* |
| RM/RC 16M23K(1) | | S16RCM16* |
| RM/RC 14M30K(1) | | S16RCM14* |
| SM/SC 24ML1TK6(1) | | S16SCM20* |
| SM/SC 20ML1TK6(1) | | S16SCM20* |
| SM/SC 16ML1TK6(1) | | S16SCML1* |
| SM/SC 14ML1TK6(1) | | S16SCML1* |
| SM/SC 16ML11TK6(1) | | S16SCML11* |
| RMDXK10D28K | Coaxial contacts | M10S1J with die set & stop bushing see page 200 to 204 |
| RCDXK1D28K | | |
| RM/RC DX60xxD28K | | |
| RM/RC DXK10D28 + york090 | | |
| RM/RC DX60xxD28 | | |

(1): Example of plating, for other plating options see page 164
* Heads to be used with handle PN: SHANDLES

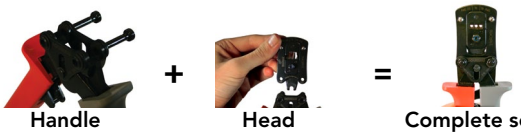


Handle Head Complete set

## 1492 (Shell size 14, 12x#16)

# Contacts

| #16 | Contact type | AWG | Part number | | Max wire Ø | Max insulator Ø |
|---|---|---|---|---|---|---|
| | | | Male | Female | | |
| Crimp | Machined | 30-28 | RM28M1K(1) | RC28M1K(1) | 0.55 | 1.00 |
| | | 26-24 | RM24M9K(1) | RC24M9K(1) | 0.80 | 1.60 |
| | | 22-20 | RM20M13K(1) | RC20M13K(1) | 1.15 | 1.80 |
| | | 22-20 | RM20M12K(1) | RC20M12K(1) | 1.15 | 2.20 |
| | | 20-16 | RM16M23K(1) | RC16M23K(1) | 1.80 | 3.20 |
| | | 16-14 | RM14M30K(1) | RC14M30K(1) | 2.30 | 3.20 |
| | Stamped & Formed reeled contacts<br>See note (2) for loose piece | 26-24 | SM24M1TK6(1)(2) | SC24M1TK6(1)(2) | - | 0.90-1.60 |
| | | 22-20 | SM20M1TK6(1)(2) | SC20M1TK6(1)(2) | - | 1.20-2.10 |
| | | 18-16 | SM16M1TK6(1)(2) | SC16M1TK6(1)(2) | - | 3.20 |
| | | 18-16 | SM16M11TK6(1)(2) | SC16M11TK6(1)(2) | - | 3.00 |
| | | 14 | SM14M1TK6(1)(2) | SC14M1TK6(1)(2) | - | 3.20 |
| PCB | Machined (3) | - | RM20M12E83K(1) | RC20M12E84K(1) | - | - |
| Coaxial | Cable Multipiece | see pages 167, 200 to 206 | RMDXK10D28 | RCDXK1D28 | - | - |
| | Cable Monocrimp | | RMDX60xxD28 | RCDX60xxD28 | - | - |
| | Twisted pair Multipiece | | RMDXK10D28 + york090 | RCDXK1D28 + york090 | - | - |
| | Twisted pair Monocrimp | | RMDX60xxD28 | RCDX60xxD28 | - | - |
| Fiber optic | POF contacts<br>(Plastic Optical Fiber) | - | RMPOF1000 | RCPOF1000B | - | - |
| Hand-solder | Loaded in the connector | 14-18 | - | - | | |

(1): Example of plating, for other plating see page 164 (2): Loose piece contact available if putting L. Example: SM20ML1TK6 (3): For dimensions see page 168 Note: all dimensions are in mm

## Electrical Characteristics

**UL**
10A 600V UL94 V-0

**CSA**
7A 600V UL94 V-0

**IEC**
10A 63V 1.5kV 3

## UTS 1492 Derating Curves

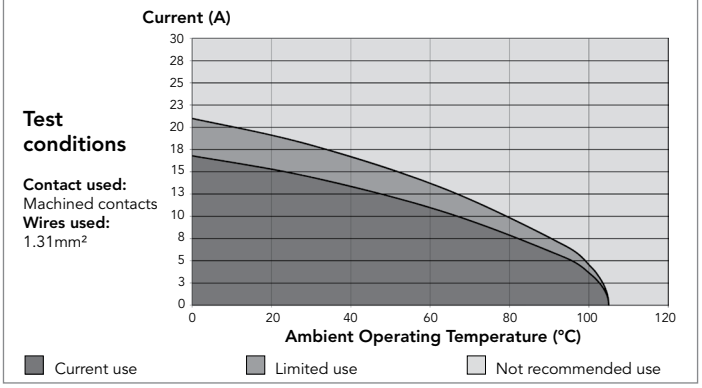

## 12E14/12D14 (Shell size 12, 14x#20)

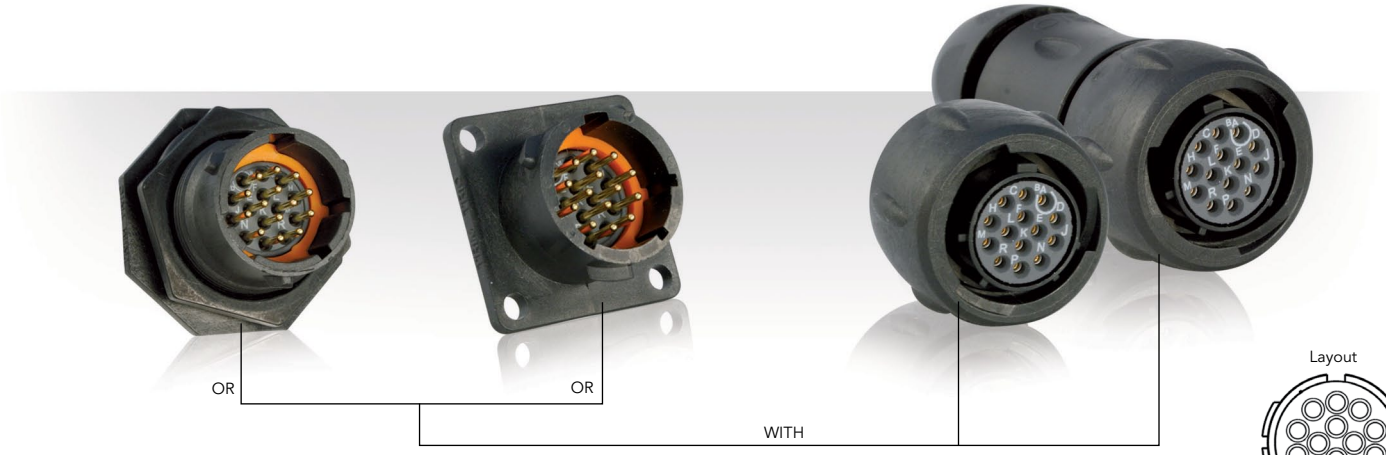


Layout

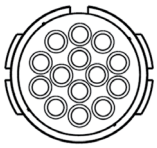

## Connector Part Numbers

| Contact type | Connector type | Backshell | Part number | |
|---|---|---|---|---|
| | | | Male insert | Female insert |
| Handsolder electrical contacts loaded see page 131 | Square flange receptacle | Without (Fig. 6) | UTS012E14P | UTS012E14S |
| | Plug | Without (Fig. 1) | UTS612E14P | UTS612E14S |
| | | Cable gland (Fig. 2) | UTS6JC12E14P | UTS6JC12E14S |
| | Jam nut receptacle | Without (Fig. 3) | UTS712E14P | UTS712E14S |
| PCB contacts loaded see page 131 | Square flange receptacle | Without (Fig. 7) | UTS012D14P | UTS012D14S |
| | Jam nut receptacle with stand off and with hold down clips | Without (Fig. 4) | UTS712D14P32 | UTS712D14S32 |
| | Jam nut receptacle with stand off and without hold down clip | Without (Fig. 5) | UTS712D14P | UTS712D14S |

Possibilities of discrimination/keying methods see page 208

Sealed unmated

## Overmoulded Cable Assembly Part Numbers

| Overmoulding type | Connector type | Wire size (mm²) | Harmonized cable part number (1) | Part number (length: 1m.)* | |
|---|---|---|---|---|---|
| | | | | Male plug | Female plug |
| Straight ending | Plug | 0.5 | H05 VV - F 14x0.5 | HAUTS0V12E14PST100 | HAUTS0V12E14SST100 |
| Right angle ending | Plug | 0.5 | H05 VV - F 14x0.5 | HAUTS0V12E14PRA100 | HAUTS0V12E14SRA100 |

(1) Other cable available on demand

* Other lengths available on demand

# 12E14/12D14 (Shell size 12, 14x#20)

## Dimensions

### Plug - UTS6

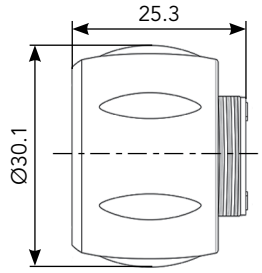


Fig. 1

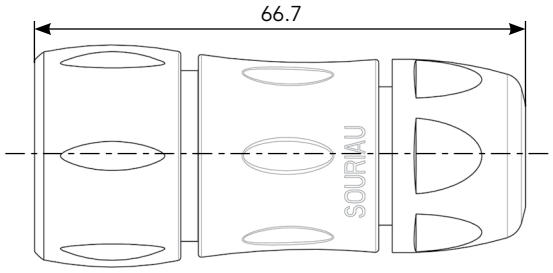


Fig. 2

### Jam Nut Receptacle - UTS7

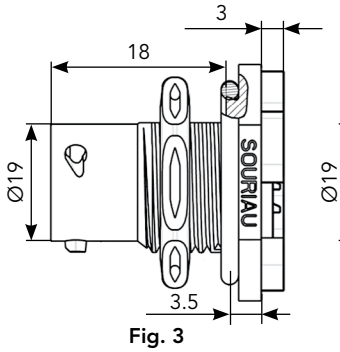


Fig. 3

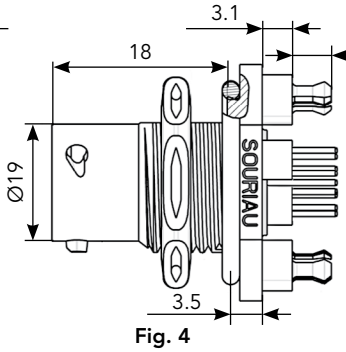


Fig. 4

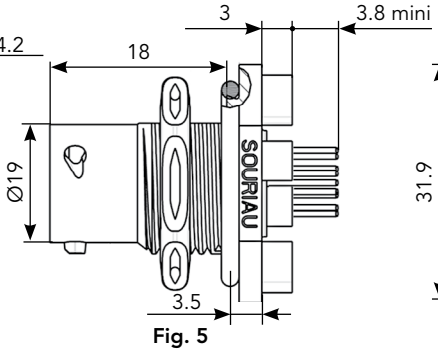


Fig. 5

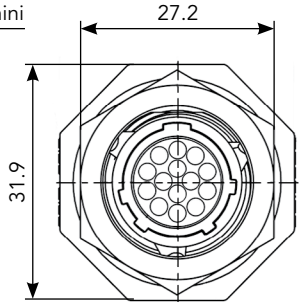


Front view

### Square Flange Receptacle - UTS0

Fig. 7

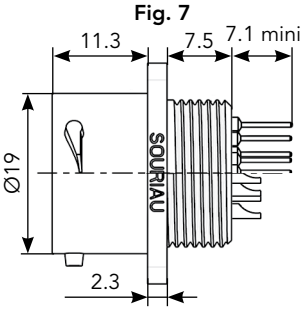


Fig. 6

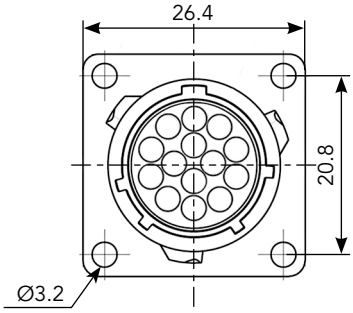


Front view

### Mated Connector Lengths

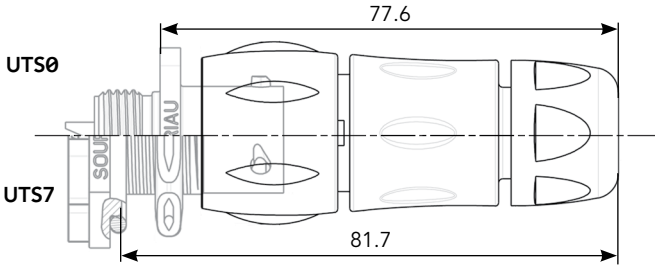


### Panel Cut Out

Square Flange Receptacle - UTS0

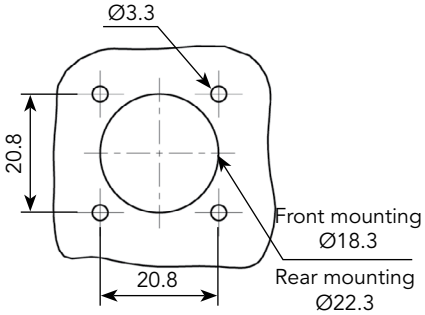


Jam Nut Receptacle - UTS7

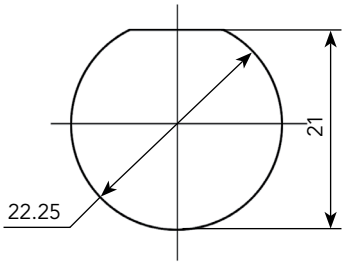


### Drilling Pattern

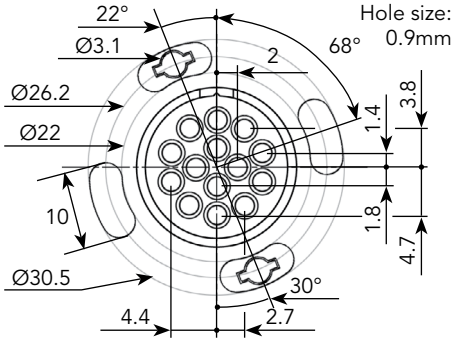


Note: Overmoulded cable assembly dimensions available page 179.

Note: all dimensions are in mm

# 12E14/12D14 (Shell size 12, 14x#20)

## Accessories and Tooling

### Jam Nut Sealing Caps

IP68/69K

| Part number |
|---|
| UTS12DCG |

IP68/69K Metal terminal

| Part number |
|---|
| UTS12DCGR |

### Plug Sealing Cap

IP68/69K

| Part number |
|---|
| UTS612DCG |

### Square Flange Sealing Cap

IP68/69K Metal terminal

| Part number |
|---|
| UTS12DCGE |

### Plastic Protective Cap

| Part numbers | |
|---|---|
| Receptacle cap | Plug cap |
| 85005587A | 85005596 |

### Gasket

| Part numbers |
|---|
| UTFD13B |

### Color Coding Rings

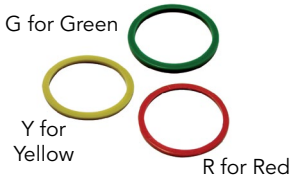


| Part numbers | |
|---|---|
| Receptacles | Plugs |
| UTS712CCRR | UTS612CCRR |
| UTS712CCRY | UTS612CCRY |
| UTS712CCRG | UTS612CCRG |

# 12E14/12D14 (Shell size 12, 14x#20)

## Contacts

| #20 | Contact type | Plating | Cable acceptance (AWG) | Wire stripping length |
|---|---|---|---|---|
| Handsolder | Loaded in the connector | Min 0.4µ gold over 0.8µ Ni | 22 to 18 | 5 mm |
| PCB | Machined (1) | Min 0.4µ gold over 0.8µ Ni | - | - |

(1): For dimensions see page 169



## Electrical Characteristics

**UL**
4.5A 250V UL94 HB

**CSA**
4.5A 250V UL94 HB

**IEC**
5A 32V 1.5kV 3

## UTS 12E14/12D14 Derating Curves

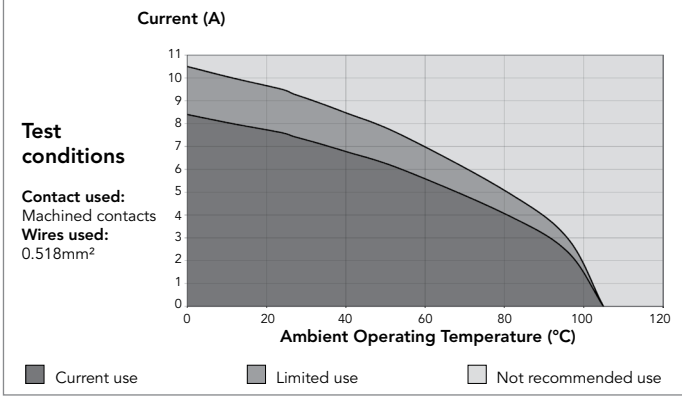

## 14E15/14D15 (Shell size 14, 14x#20, 1x#16)

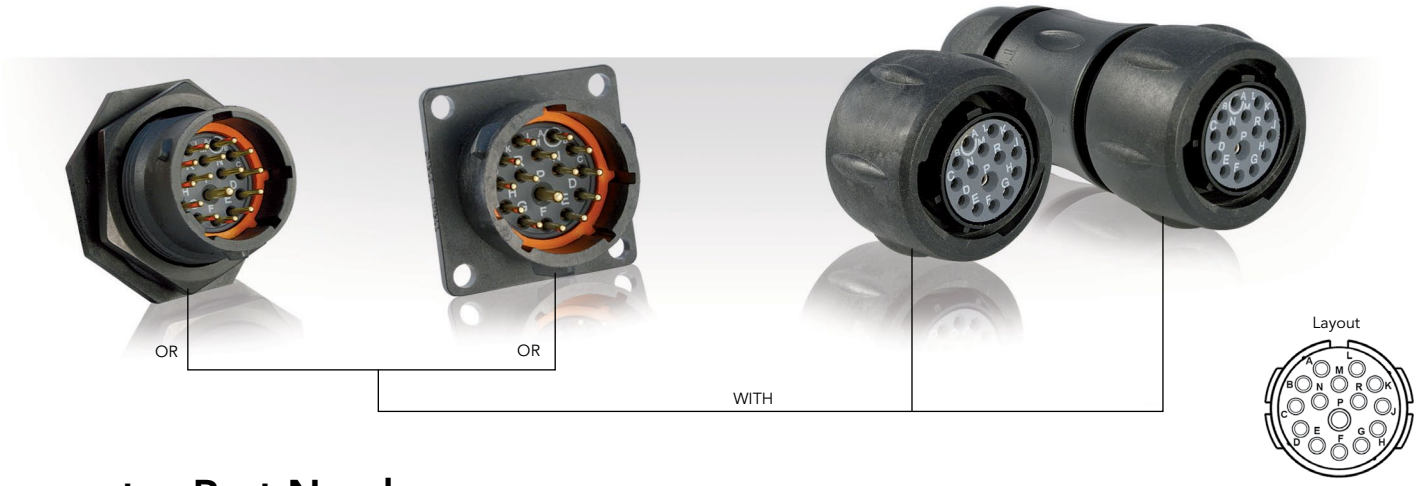


## Connector Part Numbers

| Contact type | Connector type | Backshell | Part number | |
|---|---|---|---|---|
| | | | Male insert | Female insert |
| Handsolder electrical contacts loaded see page 135 | Square flange receptacle | Without (Fig. 6) | UTS014E15P | UTS014E15S |
| | Plug | Without (Fig. 1) | UTS614E15P | UTS614E15S |
| | | Cable gland (Fig. 2) | UTS6JC14E15P | UTS6JC14E15S |
| | Jam nut receptacle | Without (Fig. 3) | UTS714E15P | UTS714E15S |
| PCB contacts loaded see page 135 | Square flange receptacle | Without (Fig. 7) | UTS014D15P | UTS014D15S |
| | Jam nut receptacle with stand off and with hold down clips | Without (Fig. 4) | UTS714D15P32 | UTS714D15S32 |
| | Jam nut receptacle with stand off and without hold down clip | Without (Fig. 5) | UTS714D15P | UTS714D15S |

Possibilities of discrimination/keying methods see page 208

Sealed unmated

## Overmoulded Cable Assembly Part Numbers

| Overmoulding type | Connector type | Wire size (mm²) | Harmonized cable part number (1) | Part number (length: 1m.)* | |
|---|---|---|---|---|---|
| | | | | Male plug | Female plug |
| Straight ending | Plug | 1.5 | H05 VV - F 15x1.5 | HAUTS0V14E15PST100 | HAUTS0V14E15SST100 |
| Right angle ending | Plug | 1.5 | H05 VV - F 15x1.5 | HAUTS0V14E15PRA100 | HAUTS0V14E15SRA100 |

(1) Other cable available on demand

* Other lengths available on demand

# 14E15/14D15 (Shell size 14, 14x#20, 1x#16)

## Dimensions

### Plug - UTS6

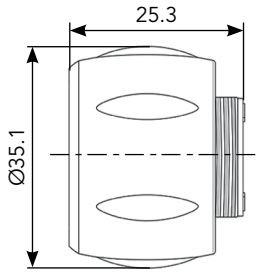


Fig. 1

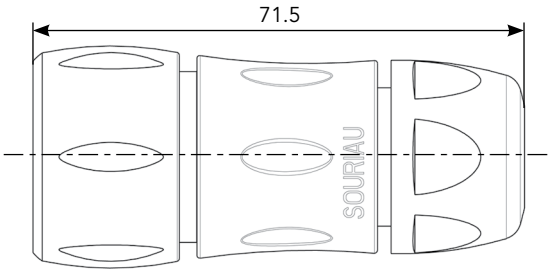


Fig. 2

### Jam Nut Receptacle - UTS7

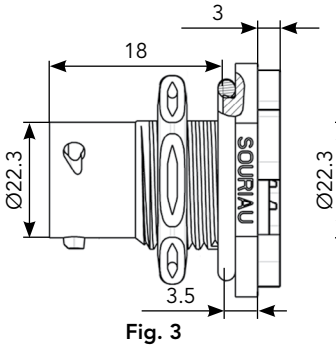


Fig. 3

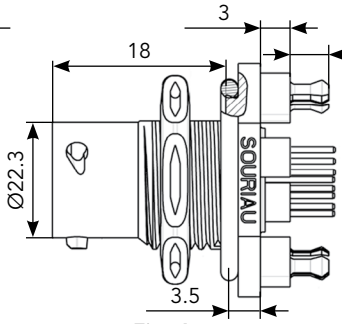


Fig. 4

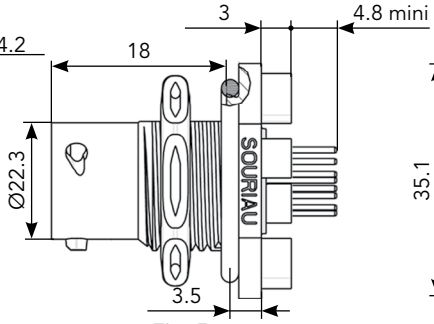


Fig. 5

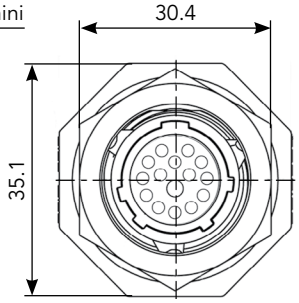


Front view

### Square Flange Receptacle - UTS0

Fig. 7

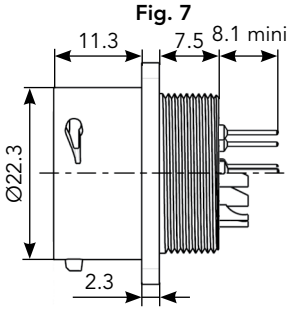


Fig. 6

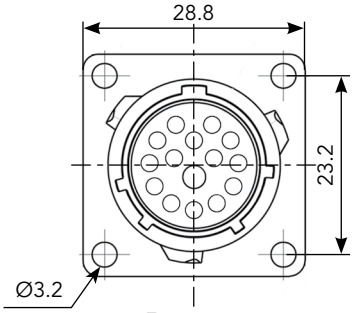


Front view

### Mated Connector Lengths

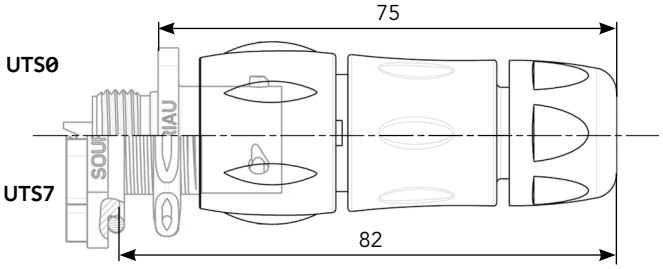


### Panel Cut Out

Square Flange Receptacle - UTS0

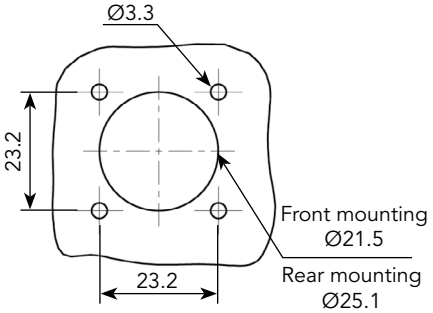


Jam Nut Receptacle - UTS7

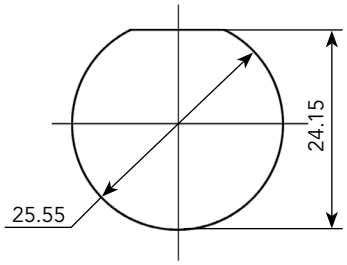


### Drilling Pattern

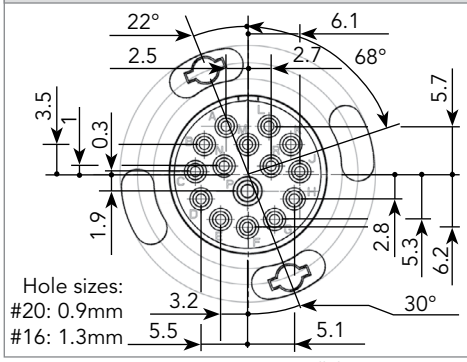


Note: Overmoulded cable assembly dimensions available page 179.

Note: all dimensions are in mm

# 14E15/14D15 (Shell size 14, 14x#20, 1x#16)

## Accessories and Tooling

### Jam Nut Sealing Caps

IP68/69K

| Part number |
|---|
| UTS14DCG |

IP68/69K Metal terminal

| Part number |
|---|
| UTS14DCGR |

### Plug Sealing Cap

IP68/69K

| Part number |
|---|
| UTS614DCG |

### Square Flange Sealing Cap

IP68/69K Metal terminal

| Part number |
|---|
| UTS14DCGE |

### Plastic Protective Cap

| Part numbers | |
|---|---|
| Receptacle cap | Plug cap |
| 85005588A | 85005597 |

### Gasket

| Part numbers |
|---|
| UTFD14B |

### Color Coding Rings

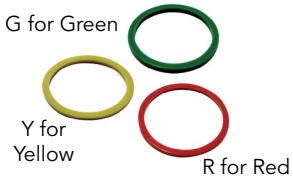


| Part numbers | |
|---|---|
| Receptacles | Plugs |
| UTS714CCRR | UTS614CCRR |
| UTS714CCRY | UTS614CCRY |
| UTS714CCRG | UTS614CCRG |

# 14E15/14D15 (Shell size 14, 14x#20, 1x#16)

## Contacts

| #16 | Contact type | Plating | Cable acceptance (AWG) | Wire stripping length |
|---|---|---|---|---|
| Handsolder | Loaded in the connector | Min 0.4µ gold over 0.8µ Ni | 18 to 14 | 5.0 mm |
| PCB | Machined (1) | Min 0.4µ gold over 0.8µ Ni | - | - |

| #20 | Contact type | Plating | Cable acceptance (AWG) | Wire stripping length |
|---|---|---|---|---|
| Handsolder | Loaded in the connector | Min 0.4µ gold over 0.8µ Ni | 22 to 18 | 3.8 mm |
| PCB | Machined (1) | Min 0.4µ gold over 0.8µ Ni | - | - |

(1): For dimensions see page 169



## Electrical Characteristics

**UL**
12A 600V UL94 HB

**CSA**
12A 600V UL94 HB

**IEC**
4A 50V 1.5kV 3

## UTS 14E15/14D15 Derating Curves

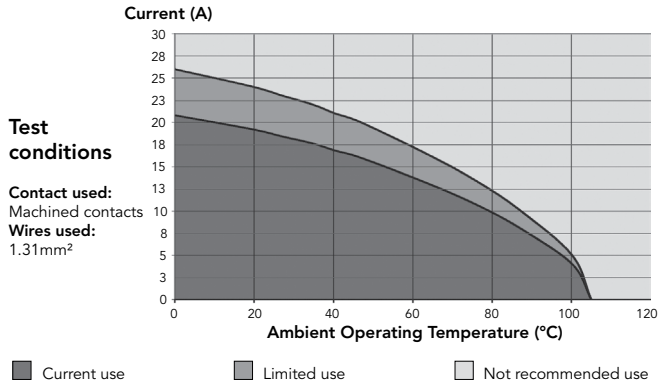

## 14E18/14D18 (Shell size 14, 18x#20)

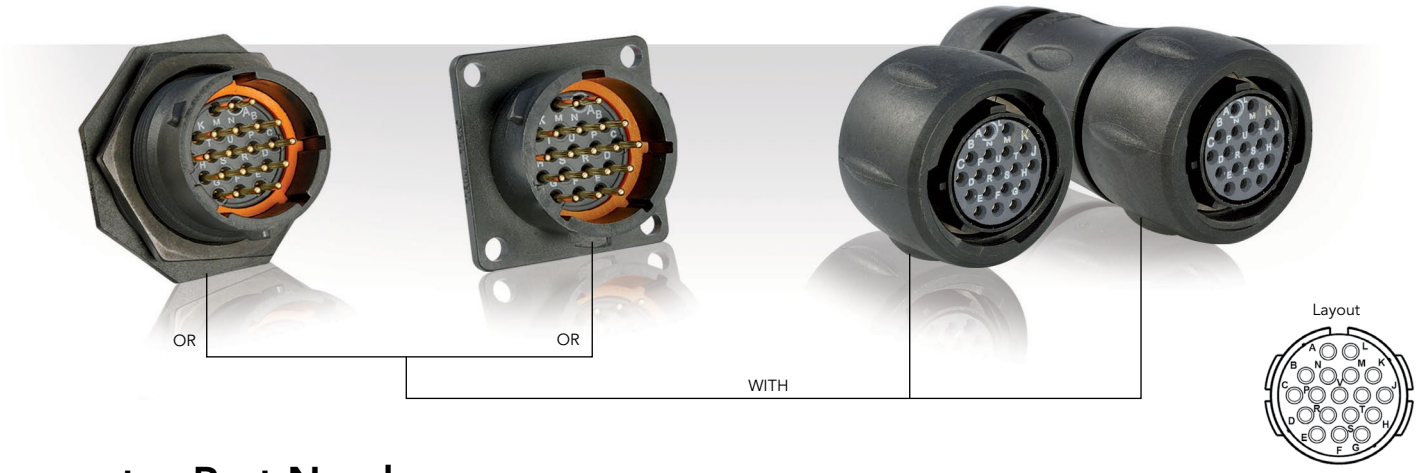


## Connector Part Numbers

| Contact type | Connector type | Backshell | Part number | |
|---|---|---|---|---|
| | | | Male insert | Female insert |
| Handsolder electrical contacts loaded see page 139 | Square flange receptacle | Without (Fig. 6) | UTS014E18P | UTS014E18S |
| | Plug | Without (Fig. 1) | UTS614E18P | UTS614E18S |
| | | Cable gland (Fig. 2) | UTS6JC14E18P | UTS6JC14E18S |
| | Jam nut receptacle | Without (Fig. 3) | UTS714E18P | UTS714E18S |
| PCB contacts loaded see page 139 | Square flange receptacle | Without (Fig. 7) | UTS014D18P | UTS014D18S |
| | Jam nut receptacle with stand off and with hold down clips | Without (Fig. 4) | UTS714D18P32 | UTS714D18S32 |
| | Jam nut receptacle with stand off and without hold down clip | Without (Fig. 5) | UTS714D18P | UTS714D18S |

Possibilities of discrimination/keying methods see page 208

Sealed unmated

## Overmoulded Cable Assembly Part Numbers

| Overmoulding type | Connector type | Wire size (mm²) | Harmonized cable part number (1) | Part number (length: 1m.)* | |
|---|---|---|---|---|---|
| | | | | Male plug | Female plug |
| Straight ending | Plug | 0.5 | H05 VV - F 18x0.5 | HAUTS0V14E18PST100 | HAUTS0V14E18SST100 |
| Right angle ending | Plug | 0.5 | H05 VV - F 18x0.5 | HAUTS0V14E18PRA100 | HAUTS0V14E18SRA100 |

(1) Other cable available on demand

* Other lengths available on demand

# 14E18/14D18 (Shell size 14, 18x#20)

## Dimensions

### Plug - UTS6

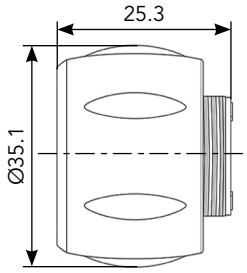


Fig. 1

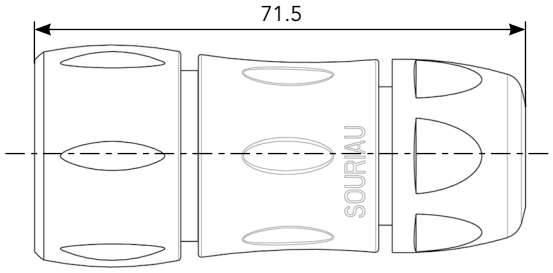


Fig. 2

### Jam Nut Receptacle - UTS7

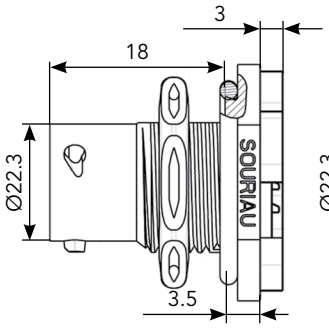


Fig. 3

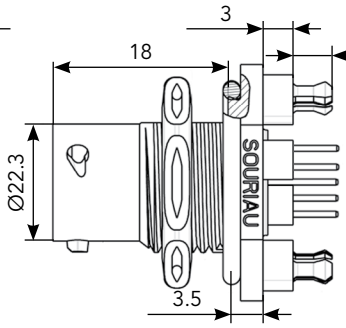


Fig. 4

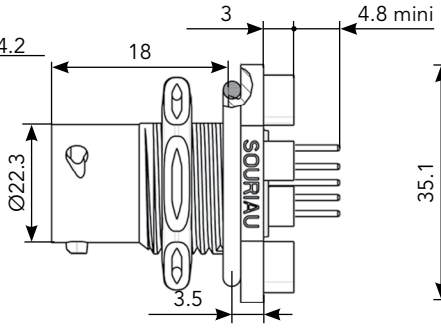


Fig. 5

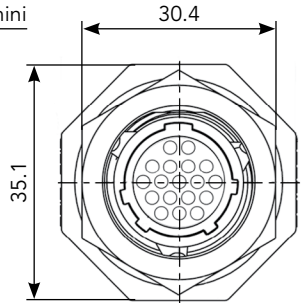


Front view

### Square Flange Receptacle - UTS0

Fig. 7

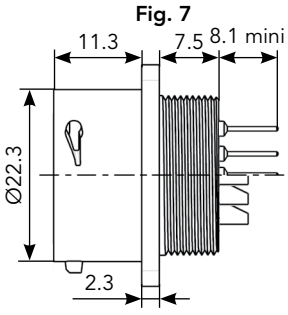


Fig. 6

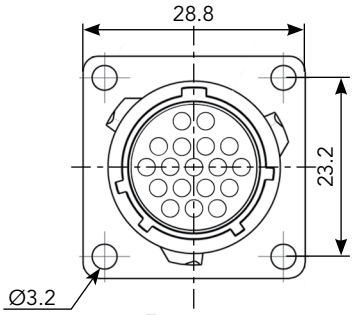


Front view

### Mated Connector Lengths

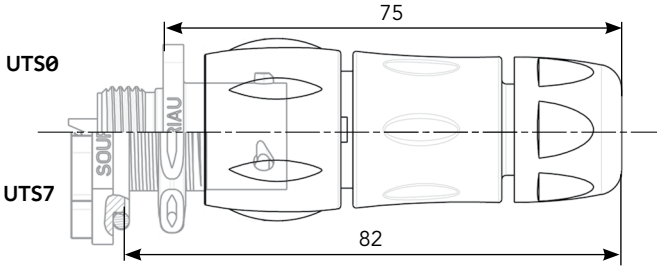


### Panel Cut Out

Square Flange Receptacle - UTS0

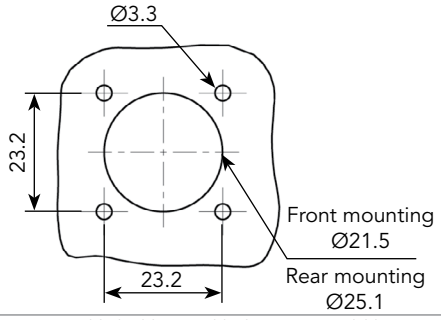


Jam Nut Receptacle - UTS7

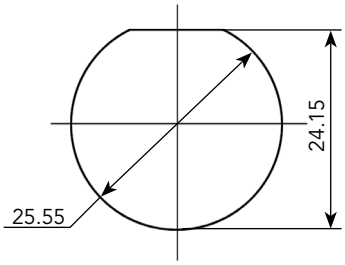


### Drilling Pattern

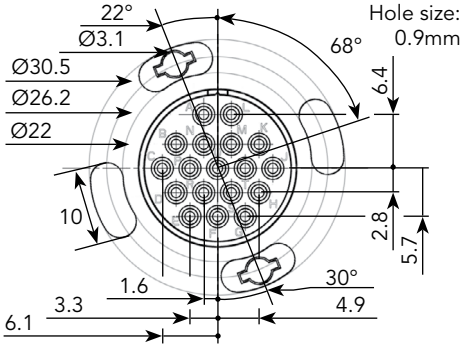


Note: Overmoulded cable assembly dimensions available page 179.

Note: all dimensions are in mm

# 14E18/14D18 (Shell size 14, 18x#20)

## Accessories and Tooling

### Jam Nut Sealing Caps

IP68/69K

| Part number |
|---|
| UTS14DCG |

IP68/69K Metal terminal

| Part number |
|---|
| UTS14DCGR |

### Plug Sealing Cap

IP68/69K

| Part number |
|---|
| UTS614DCG |

### Square Flange Sealing Cap

IP68/69K Metal terminal

| Part number |
|---|
| UTS14DCGE |

### Plastic Protective Cap

| Part numbers | |
|---|---|
| Receptacle cap | Plug cap |
| 85005588A | 85005597 |

### Gasket

| Part numbers |
|---|
| UTFD14B |

### Color Coding Rings

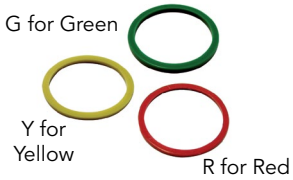


| Part numbers | |
|---|---|
| Receptacles | Plugs |
| UTS714CCRR | UTS614CCRR |
| UTS714CCRY | UTS614CCRY |
| UTS714CCRG | UTS614CCRG |

# 14E18/14D18 (Shell size 14, 18x#20)

## Contacts

| #20 | Contact type | Plating | Cable acceptance (AWG) | Wire stripping length |
|---|---|---|---|---|
| Handsolder | Loaded in the connector | Min 0.4µ gold over 0.8µ Ni | 22 to 18 | 5 mm |
| PCB | Machined (1) | Min 0.4µ gold over 0.8µ Ni | - | - |

(1): For dimensions see page 169



## Electrical Characteristics

**UL**
4A 250V UL94 HB

**CSA**
4A 250V UL94 HB

**IEC**
5A 50V 1.5kV 3

## UTS 14E18/14D18 Derating Curves

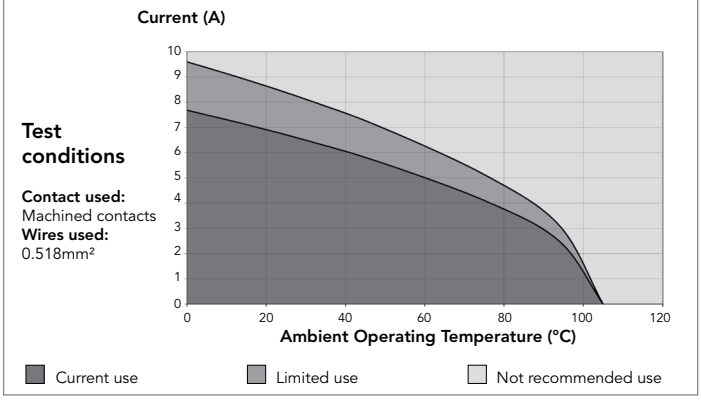

# 1419 - 14E19/14D19 (Shell size 14, 19x#20)

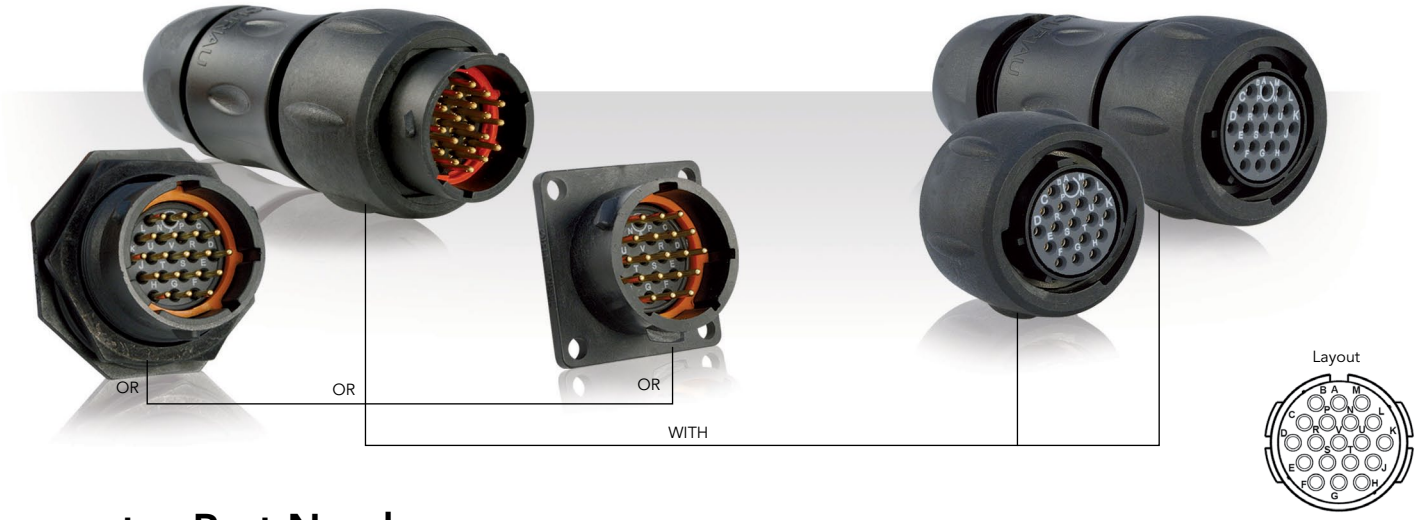


## Connector Part Numbers

| Contact type | Connector type | Backshell | Part number | |
|---|---|---|---|---|
| | | | Male insert | Female insert |
| Crimp contacts supplied separately see page 143 | Free hanging receptacle | Cable gland (Fig. 1) | UTS1JC1419P | UTS1JC1419S |
| | Plug | Without (Fig. 2) | UTS61419P | UTS61419S |
| | Plug | Cable gland (Fig. 3) | UTS6JC1419P | UTS6JC1419S |
| | Jam nut receptacle | Without (Fig. 4) | UTS71419P | UTS71419S |
| PCB contacts supplied separately see page 143 | Jam nut receptacle | Without (Fig. 4) | UTS71419P | UTS71419S |
| Handsolder electrical contacts loaded see page 143 | Square flange receptacle | Without (Fig. 8) | UTS014E19P | UTS014E19S |
| | Plug | Without (Fig. 2) | UTS614E19P | UTS614E19S |
| | | Cable gland (Fig. 3) | UTS6JC14E19P | UTS6JC14E19S |
| | Jam nut receptacle | Without (Fig. 5) | UTS714E19P | UTS714E19S |
| PCB contacts loaded see page 143 | Square flange receptacle | Without (Fig. 9) | UTS014D19P | UTS014D19S |
| | Jam nut receptacle with stand off and with hold down clips | Without (Fig. 6) | UTS714D19P32 | UTS714D19S32 |
| | Jam nut receptacle with stand off and without hold down clip | Without (Fig. 7) | UTS714D19P | UTS714D19S |

Possibilities of discrimination/keying methods see page 208

Sealed unmated

## Overmoulded Cable Assembly Part Numbers

| Overmoulding type | Connector type | Wire size (mm²) | Harmonized cable part number (1) | Part number (length: 1m.)* | |
|---|---|---|---|---|---|
| | | | | Male plug | Female plug |
| Straight ending | Plug | 0.5 | H05 VV - F 19x0.5 | HAUTS0V1419PST100 | HAUTS0V1419SST100 |
| | | | | HAUTS0V14E19PST100 | HAUTS0V14E19SST100 |
| Right angle ending | Plug | 0.5 | H05 VV - F 19x0.5 | HAUTS0V1419PRA100 | HAUTS0V1419SRA100 |
| | | | | HAUTS0V14E19PRA100 | HAUTS0V14E19SRA100 |

(1) Other cable available on demand

* Other lengths available on demand

# 1419 - 14E19/14D19 (Shell size 14, 19x#20)

## Dimensions

### Free Hanging - UTS1

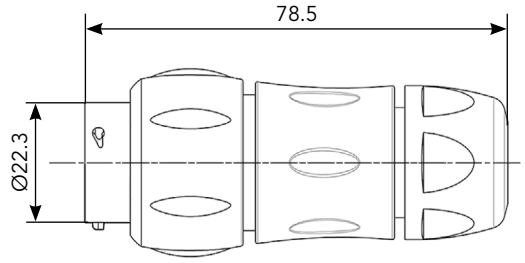


Fig. 1

### Plug - UTS6

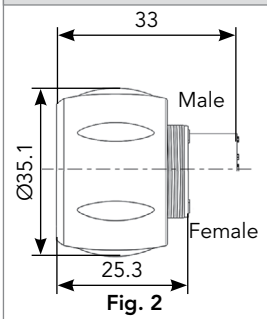


Fig. 2

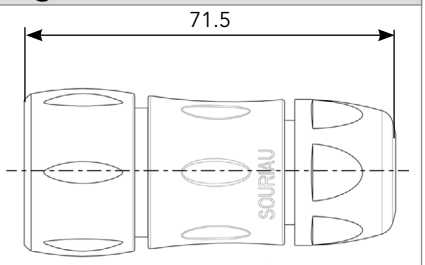


Fig. 3

### Jam Nut Receptacle - UTS7

Fig. 4

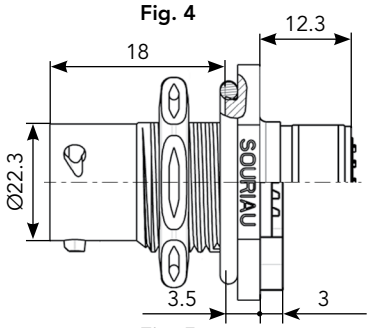


Fig. 5

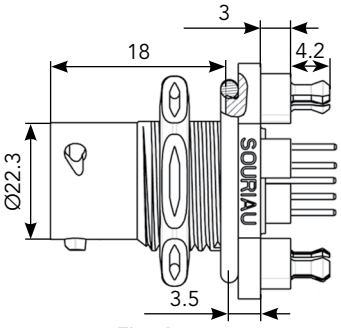


Fig. 6

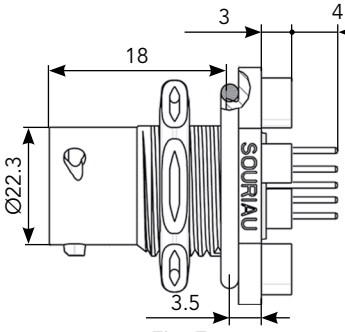


Fig. 7

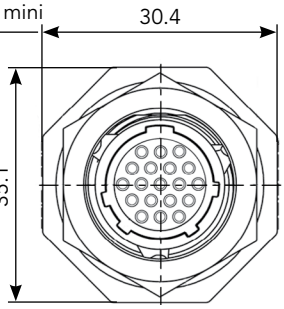


Front view

### Square Flange Receptacle - UTS0

Fig. 9

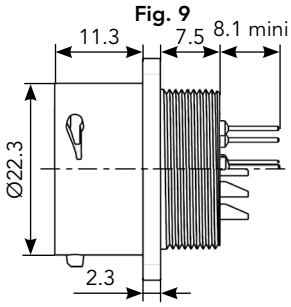


Fig. 8

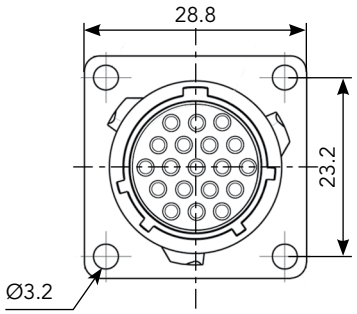


Front view

### Mated Connector Lengths

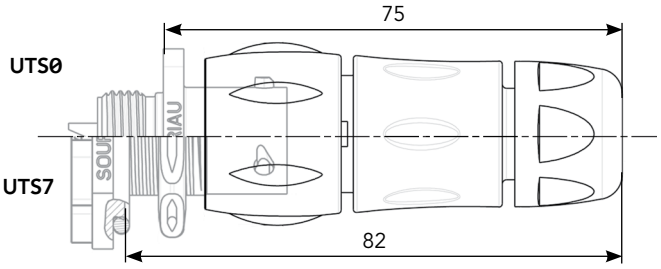


### Panel Cut Out

Square Flange Receptacle - UTS0

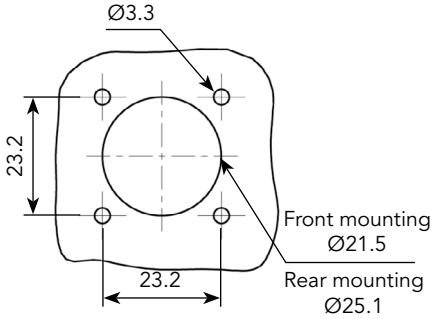


Jam Nut Receptacle - UTS7

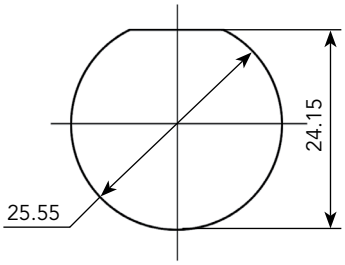


Note: Overmoulded cable assembly dimensions available page 179.

### Drilling Pattern

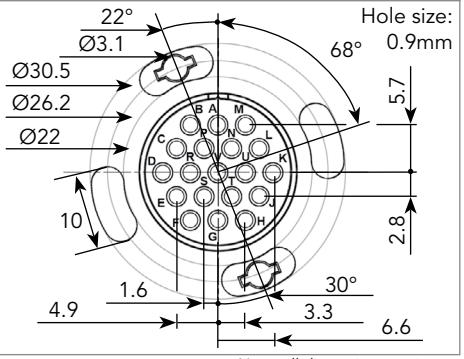


Note: all dimensions are in mm

# 1419 - 14E19/14D19 (Shell size 14, 19x#20)

## Accessories and Tooling

### Jam Nut Sealing Caps

IP68/69K

| Part number |
|---|
| UTS14DCG |

IP68/69K Metal terminal

| Part number |
|---|
| UTS14DCGR |

### Handle (without Head)

| Part number |
|---|
| SHANDLES |

### Tool Kit

| Part number |
|---|
| TOOLKIT |

### Plug Sealing Cap

IP68/69K

| Part number |
|---|
| UTS614DCG |

### Square Flange Sealing Cap

IP68/69K Metal terminal

| Part number |
|---|
| UTS14DCGE |

### Crimp Tooling (without Shandles)

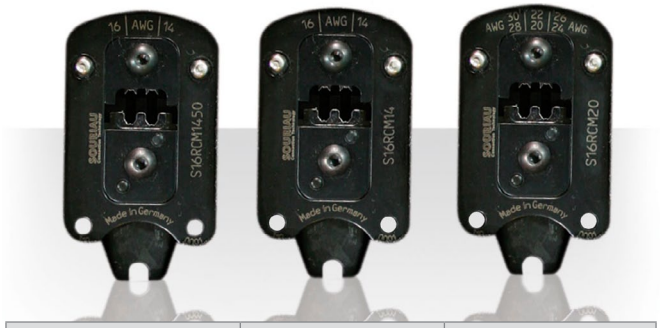


| Contacts | Contact size | Part number of head |
|---|---|---|
| RM/RC 24W3K(1) | Standard contacts<br>#20<br>Ø 1mm | S20RCM* |
| RM/RC 20W3K(1) | | S20RCM* |
| RM/RC 18W3K(1) | | S20RCM* |
| SM/SC 24WL3S | | S20SCM20* |
| SM/SC 20WL3S | | S20SCM20* |

(1): Example of plating, for other plating see page 164
*: Heads to be used with handle PN: SHANDLES

Handle

+

Head

=

Complete set

### Plastic Protective Cap

| Part numbers | |
|---|---|
| Receptacle cap | Plug cap |
| 85005588A | 85005597 |

### Gasket

| Part numbers |
|---|
| UTFD14B |

### Color Coding Rings

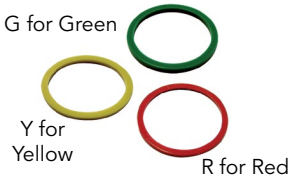


| Part numbers | |
|---|---|
| Receptacles | Plugs |
| UTS714CCRR | UTS614CCRR |
| UTS714CCRY | UTS614CCRY |
| UTS714CCRG | UTS614CCRG |

### Extraction Tool #20

| Part number |
|---|
| RX20D44 |

# 1419 - 14E19/14D19 (Shell size 14, 19x#20)

## Contacts

| #20 | Contact type | Wire size | | Part number | | Max wire Ø | Max insulator Ø | Wire stripping length |
|---|---|---|---|---|---|---|---|---|
| | | AWG | mm² | Male | Female | | | |
| Crimp | Machined | 26-24 | 0.13-0.25 | RM24W3K(1) | RC24W3K(1) | 0.80 | 1.60 | 4.80 |
| | | 22-20 | 0.32-0.52 | RM20W3K(1) | RC20W3K(1) | 1.15 | 1.60 | 4.80 |
| | | 20-18 | 0.50-0.93 | RM18W3K(1) | RC18W3K(1) | 1.30 | 2.10 | 4.80 |
| | Stamped & Formed reeled contacts<br>See note (2) for loose piece | 26-24 | 0.13-0.25 | SM24W3TK6(2) | SC24W3TK6(2) | - | 0.90-1.60 | 4.00 |
| | | 26-24 | 0.13-0.25 | SM24W3S26(2) | SC24W3S25(2) | - | 0.90-1.60 | 4.00 |
| | | 22-20 | 0.32-0.52 | SM20W3TK6(2) | SC20W3TK6(2) | - | 1.20-2.10 | 4.00 |
| | | 22-20 | 0.32-0.52 | SM20W3S26(2) | SC20W3S25(2) | - | 1.20-2.10 | 4.00 |
| PCB | Machined (3) | - | - | RMW5016K | RCW5016K | - | - | - |
| Hand-solder | Loaded in the connector | 22-18 | - | - | - | - | - | 3.80 |

(1): Example of plating, for other plating see page 164 (2): Loose piece contact available if putting L. Example: SM20WL3TK6 (3): For dimensions see page 168 Note: all dimensions are in mm

## Electrical Characteristics

**UTS 1419**
**UL**
5A 250V UL94 V-0

**UTS 14E19/14D19**
**UL**
4A 250V UL94 HB

**CSA**
4A 250V UL94 V-0

**CSA**
4A 250V UL94 HB

**IEC**
5A 32V 1.5kV 3

## UTS 1419 - 14E19/14D19 Derating Curves

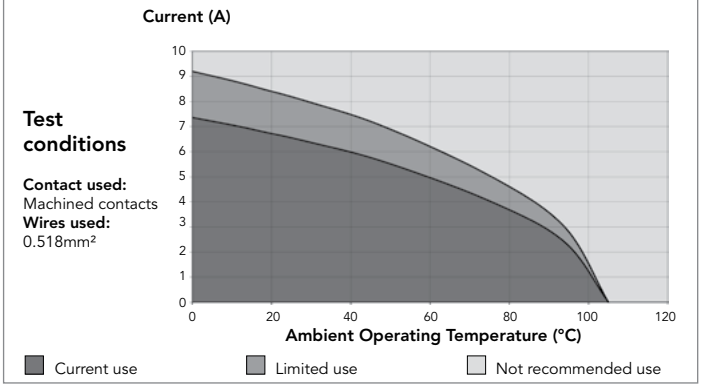

## 1823 (Shell size 18, 23x#16)

## Connector Part Numbers

| Contact type | Connector type | Backshell | Part number | |
|---|---|---|---|---|
| | | | Male insert | Female insert |
| Crimp contacts supplied separately see page 147 | Square flange receptacle | Without (Fig. 1) | **UTS01823P** | **UTS01823S** |
| | Free hanging receptacle | Cable gland (Fig. 2) | **UTS1JC1823P** | **UTS1JC1823S** |
| | Plug | Without (Fig. 3) | **UTS61823P** | **UTS61823S** |
| | Plug | Cable gland (Fig. 4) | **UTS6JC1823P** | **UTS6JC1823S** |
| | Jam nut receptacle | Without (Fig. 5) | **UTS71823P** | **UTS71823S** |
| PCB contacts supplied separately see page 147 | Square flange receptacle | Without (Fig. 1) | **UTS01823P** | **UTS01823S** |
| | Jam nut receptacle | Without (Fig. 5) | **UTS71823P** | **UTS71823S** |

Possibilities of discrimination/keying methods see page 208

## Overmoulded Cable Assembly Part Numbers

| Overmoulding type | Connector type | Wire size (mm²) | Harmonized cable part number (1) | Part number (length: 1m.)* | |
|---|---|---|---|---|---|
| | | | | Male plug | Female plug |
| Straight ending | Plug | 1.5 | H05 VV - F 23x1.5 | **HAUTS0V1823PST100** | **HAUTS0V1823SST100** |
| Right angle ending | Plug | 1.5 | H05 VV - F 23x1.5 | **HAUTS0V1823PRA100** | **HAUTS0V1823SRA100** |

(1) Other cable available on demand

* Other lengths available on demand

# 1823 (Shell size 18, 23x#16)

## Dimensions

### Square Flange Receptacle - UTS0

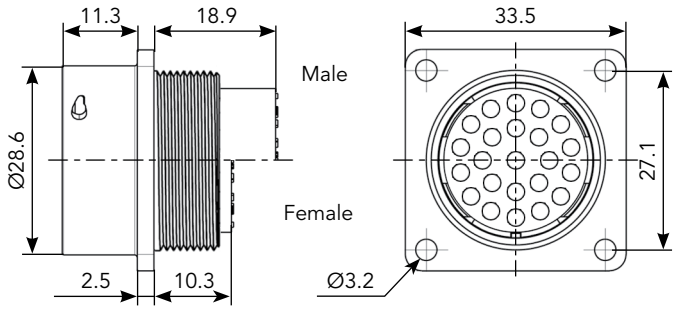


Fig. 1

### Free Hanging - UTS1

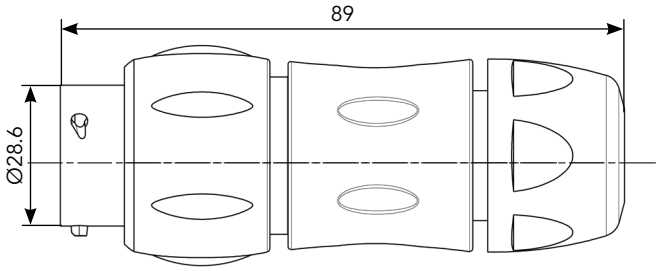


Fig. 2

### Plug - UTS6

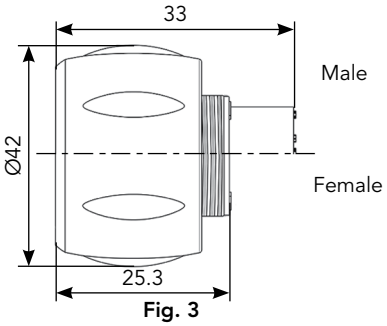


Fig. 3

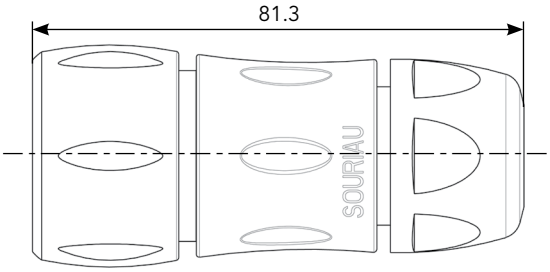


Fig. 4

### Jam Nut Receptacle - UTS7

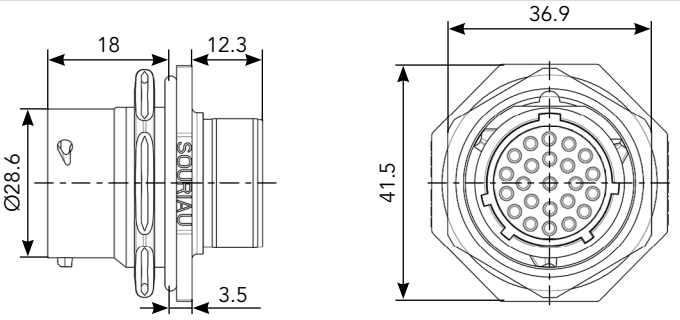


Fig. 5

### Mated Connector Lengths

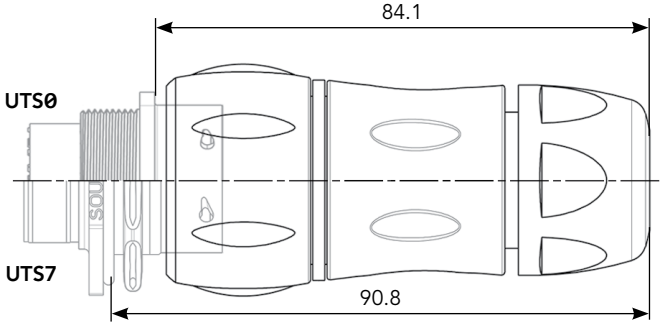


### Panel Cut Out

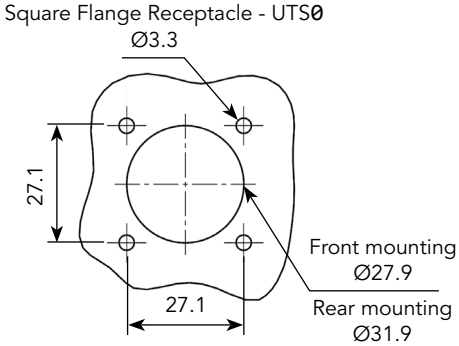


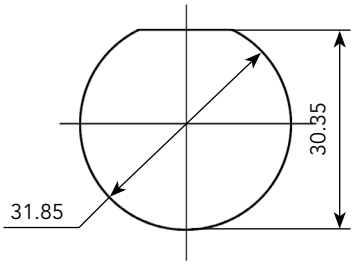


### Drilling Pattern

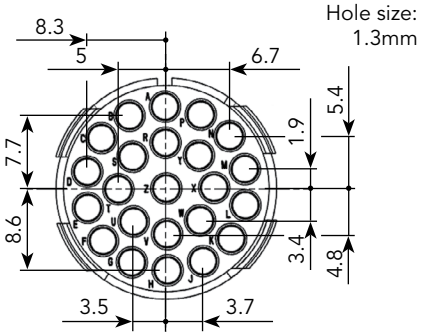


Note: Overmoulded cable assembly dimensions available page 179.

Note: all dimensions are in mm

# 1823 (Shell size 18, 23x#16)

## Accessories and Tooling

### Jam Nut Sealing Caps

IP68/69K

| Part number |
|---|
| UTS18DCG |

IP68/69K Metal terminal

| Part number |
|---|
| UTS18DCGR |

### Handle (without Head)

| Part number |
|---|
| SHANDLES |

### Tool Kit

| Part number |
|---|
| TOOLKIT |

### Plug Sealing Cap

IP68/69K

| Part number |
|---|
| UTS618DCG |

### Square Flange Sealing Cap

IP68/69K Metal terminal

| Part number |
|---|
| UTS18DCGE |

### Plastic Protective Cap

| Part numbers | |
|---|---|
| Receptacle cap | Plug cap |
| 85005590A | 85005599 |

### Gasket

| Part numbers |
|---|
| UTFD16B |

### Color Coding Rings

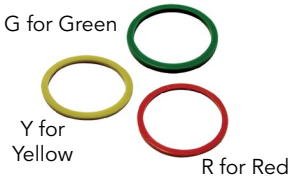


| Part numbers | |
|---|---|
| Receptacles | Plugs |
| UTS718CCRR | UTS618CCRR |
| UTS718CCRY | UTS618CCRY |
| UTS718CCRG | UTS618CCRG |

### Crimp Tooling (without Shandles)

| Contacts | Contact size | Part number of head |
|---|---|---|
| RM/RC 28M1K(1) | Standard contacts #16 Ø 1.6mm | S16RCM20* |
| RM/RC 24M9K(1) | | S16RCM20* |
| RM/RC 20M13K(1) | | S16RCM20* |
| RM/RC 20M12K(1) | | S16RCM20* |
| RM/RC 16M23K(1) | | S16RCM16* |
| RM/RC 14M30K(1) | | S16RCM14* |
| SM/SC 24ML1TK6(1) | | S16SCM20* |
| SM/SC 20ML1TK6(1) | | S16SCM20* |
| SM/SC 16ML1TK6(1) | | S16SCML1* |
| SM/SC 14ML1TK6(1) | | S16SCML1* |
| SM/SC 16ML11TK6(1) | | S16SCML11* |
| RMDXK10D28K | Coaxial contacts | M10S1J with die set & stop bushing see page 200 to 204 |
| RCDXK1D28K | | |
| RM/RC DX60xxD28K | | |
| RM/RC DXK10D28 + york090 | | |
| RM/RC DX60xxD28 | | |

(1): Example of plating, for other plating options see page 164
* Heads to be used with handle PN: SHANDLES

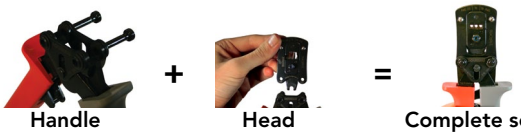


Handle Head Complete set

# 1823 (Shell size 18, 23x#16)

## Contacts

| #16 | Contact type | AWG | Part number | | Max wire Ø | Max insulator Ø |
|---|---|---|---|---|---|---|
| | | | Male | Female | | |
| Crimp | Machined | 30-28 | RM28M1K(1) | RC28M1K(1) | 0.55 | 1.00 |
| | | 26-24 | RM24M9K(1) | RC24M9K(1) | 0.80 | 1.60 |
| | | 22-20 | RM20M13K(1) | RC20M13K(1) | 1.15 | 1.80 |
| | | 22-20 | RM20M12K(1) | RC20M12K(1) | 1.15 | 2.20 |
| | | 20-16 | RM16M23K(1) | RC16M23K(1) | 1.80 | 3.20 |
| | | 16-14 | RM14M30K(1) | RC14M30K(1) | 2.30 | 3.20 |
| | Stamped & Formed reeled contacts<br>See note (2) for loose piece | 26-24 | SM24M1TK6(1)(2) | SC24M1TK6(1)(2) | - | 0.90-1.60 |
| | | 22-20 | SM20M1TK6(1)(2) | SC20M1TK6(1)(2) | - | 1.20-2.10 |
| | | 18-16 | SM16M1TK6(1)(2) | SC16M1TK6(1)(2) | - | 3.20 |
| | | 18-16 | SM16M11TK6(1)(2) | SC16M11TK6(1)(2) | - | 3.00 |
| | | 14 | SM14M1TK6(1)(2) | SC14M1TK6(1)(2) | - | 3.20 |
| PCB | Machined (3) | - | RM20M12E83K(1) | RC20M12E84K(1) | - | - |
| Coaxial | Cable Multipiece | see pages 167, 200 to 206 | RMDXK10D28 | RCDXK1D28 | - | - |
| | Cable Monocrimp | | RMDX60xxD28 | RCDX60xxD28 | - | - |
| | Twisted pair Multipiece | | RMDXK10D28 + york090 | RCDXK1D28 + york090 | - | - |
| | Twisted pair Monocrimp | | RMDX60xxD28 | RCDX60xxD28 | - | - |
| Fiber optic | POF contacts<br>(Plastic Optical Fiber) | - | RMPOF1000 | RCPOF1000B | - | - |

(1): Example of plating, for other plating see page 164 (2): Loose piece contact available if putting L. Example: SM20ML1TK6 (3): For dimensions see page 168 Note: all dimensions are in mm

## Electrical Characteristics

**UL**
10A 500V UL94 V-0

**CSA**
7A 500V UL94 V-0

**IEC**
9A 63V 1.5kV 3

## UTS 1823 Derating Curves

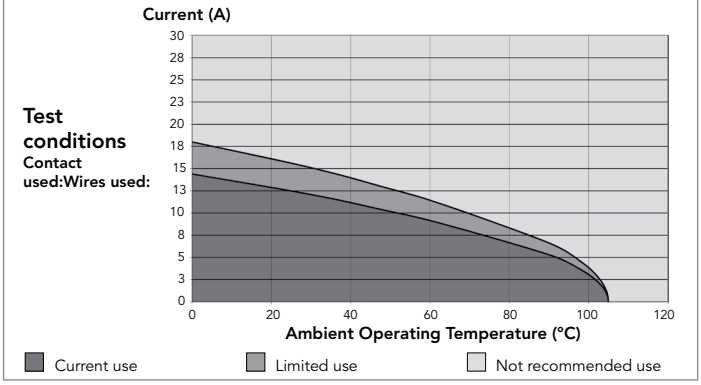

## 1832 - 18E32 (Shell size 18, 32x#20)

Layout

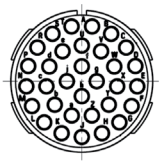

## Connector Part Numbers

| Contact type | Connector type | Backshell | Part number | |
|---|---|---|---|---|
| | | | Male insert | Female insert |
| Crimp Contact supplied separately see page 151 | Free hanging receptacle | Cable gland (Fig. 2) | **UTS1JC1832P** | **UTS1JC1832S** |
| | Plug | Without (Fig. 3) | **UTS61832P** | **UTS61832S** |
| | Plug | Cable gland (Fig. 4) | **UTS6JC1832P** | **UTS6JC1832S** |
| | Jam nut receptacle | Without (Fig. 5) | **UTS71832P** | **UTS71832S** |
| PCB contacts supplied separately see page 151 | Jam nut receptacle | Without (Fig. 5) | **UTS71832P** | **UTS71832S** |
| Handsolder electrical contacts loaded see page 151 | Square flange receptacle | Without (Fig. 1) | **UTS018E32P** | **-** |

Possibilities of discrimination/keying methods see page 208

Sealed unmated

## Overmoulded Cable Assembly Part Numbers

| Overmoulding type | Connector type | Wire size (mm²) | Harmonized cable part number (1) | Part number (length: 1m.)* | |
|---|---|---|---|---|---|
| | | | | Male plug | Female plug |
| Straight ending | Plug | 0.5 | H05 VV - F 32x0.5 | **HAUTS0V1832PST100** | **HAUTS0V1832SST100** |
| Right angle ending | Plug | 0.5 | H05 VV - F 32x0.5 | **HAUTS0V1832PRA100** | **HAUTS0V1832SRA100** |

(1) Other cable available on demand

* Other lengths available on demand

# 1832 - 18E32 (Shell size 18, 32x#20)

## Dimensions

### Square Flange Receptacle - UTS0

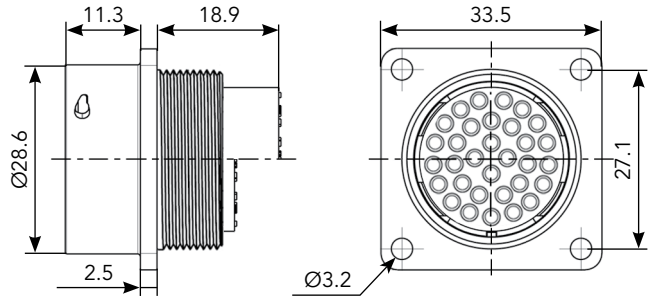


Fig. 1 Front view

### Free Hanging - UTS1

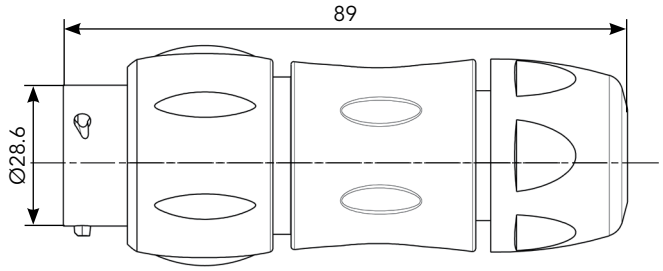


Fig. 2

### Plug - UTS6

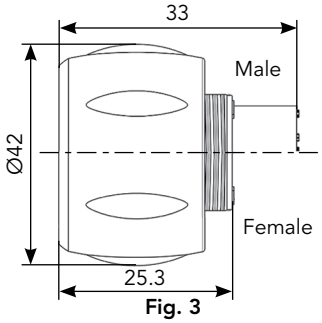


Fig. 3

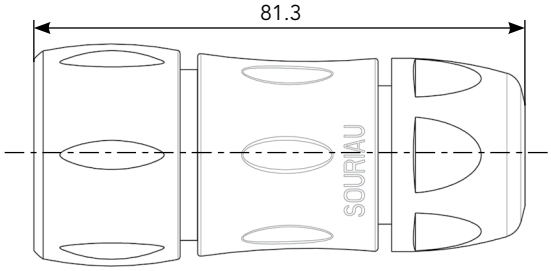


Fig. 4

### Jam Nut Receptacle - UTS7

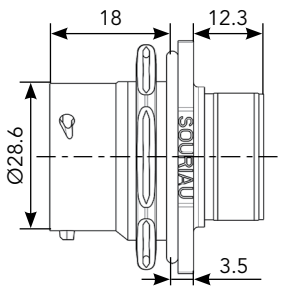


Fig. 5

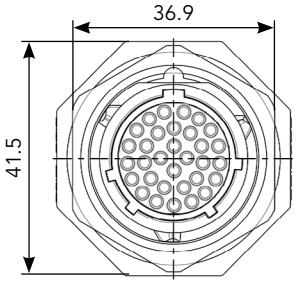


Front view

### Mated Connector Length - UTS7

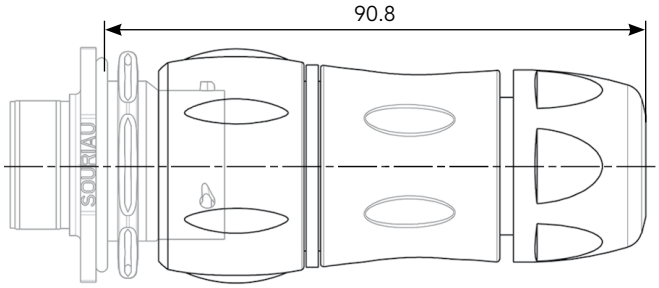


### Panel Cut Out

Jam Nut Receptacle - UTS7

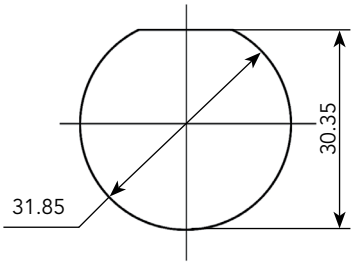


### Drilling Pattern

Hole size: 0.9mm

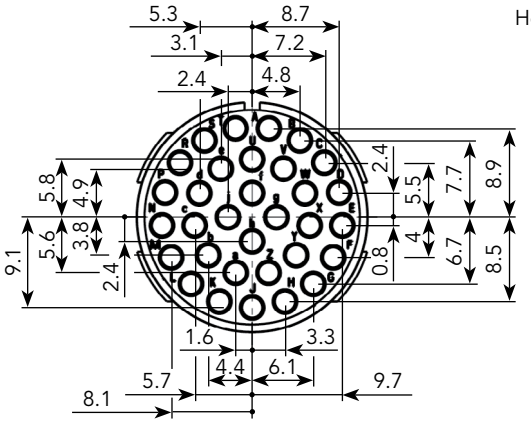


Note: Overmoulded cable assembly dimensions available page 179.

Note: all dimensions are in mm

# 1832 - 18E32 (Shell size 18, 32x#20)

## Accessories and Tooling

### Jam Nut Sealing Caps

IP68/69K

| Part number |
|---|
| UTS18DCG |

IP68/69K Metal terminal

| Part number |
|---|
| UTS18DCGR |

### Handle (without Head)

| Part number |
|---|
| SHANDLES |

### Tool Kit

| Part number |
|---|
| TOOLKIT |

### Plug Sealing Cap

IP68/69K

| Part number |
|---|
| UTS618DCG |

### Square Flange Sealing Cap

IP68/69K Metal terminal

| Part number |
|---|
| UTS18DCGE |

### Crimp Tooling (without Shandles)

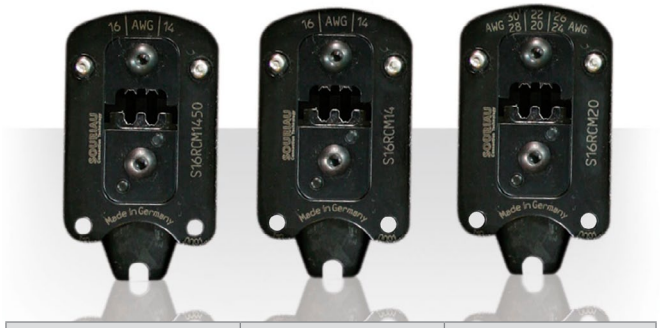


| Contacts | Contact size | Part number of head |
|---|---|---|
| RM/RC 24W3K(1) | Standard contacts<br>#20<br>Ø 1mm | S20RCM* |
| RM/RC 20W3K(1) | | S20RCM* |
| RM/RC 18W3K(1) | | S20RCM* |
| SM/SC 24WL3S | | S20SCM20* |
| SM/SC 20WL3S | | S20SCM20* |

(1): Example of plating, for other plating see page 164
*: Heads to be used with handle PN: SHANDLES

Handle

+

Head

=

Complete set

### Plastic Protective Cap

| Part numbers | |
|---|---|
| Receptacle cap | Plug cap |
| 85005590A | 85005599 |

### Gasket

| Part numbers |
|---|
| UTFD16B |

### Color Coding Rings

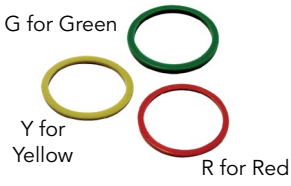


| Part numbers | |
|---|---|
| Receptacles | Plugs |
| UTS718CCRR | UTS618CCRR |
| UTS718CCRY | UTS618CCRY |
| UTS718CCRG | UTS618CCRG |

### Extraction Tool #20

| Part number |
|---|
| RX20D44 |

# 1832 - 18E32 (Shell size 18, 32x#20)

## Contacts

| #20 | Contact type | Wire size | | Part number | | Max wire Ø | Max insulator Ø | Wire stripping length |
|---|---|---|---|---|---|---|---|---|
| | | AWG | mm² | Male | Female | | | |
| Crimp | Machined | 26-24 | 0.13-0.25 | RM24W3K(1) | RC24W3K(1) | 0.80 | 1.60 | 4.80 |
| | | 22-20 | 0.32-0.52 | RM20W3K(1) | RC20W3K(1) | 1.15 | 1.60 | 4.80 |
| | | 20-18 | 0.50-0.93 | RM18W3K(1) | RC18W3K(1) | 1.30 | 2.10 | 4.80 |
| | Stamped & Formed reeled contacts<br>See note (2) for loose piece | 26-24 | 0.13-0.25 | SM24W3TK6(2) | SC24W3TK6(2) | - | 0.90-1.60 | 4.00 |
| | | 26-24 | 0.13-0.25 | SM24W3S26(2) | SC24W3S25(2) | - | 0.90-1.60 | 4.00 |
| | | 22-20 | 0.32-0.52 | SM20W3TK6(2) | SC20W3TK6(2) | - | 1.20-2.10 | 4.00 |
| | | 22-20 | 0.32-0.52 | SM20W3S26(2) | SC20W3S25(2) | - | 1.20-2.10 | 4.00 |
| PCB | Machined (3) | - | - | RMW5016K | RCW5016K | - | - | - |
| Hand-solder | Loaded in the connector | 18-22 | - | - | - | - | - | 3.80 |

(1): Example of plating, for other plating see page 164 (2): Loose piece contact available if putting L. Example: SM20WL3TK6 (3): For dimensions see page 168 Note: all dimensions are in mm

## Electrical Characteristics

**UL**
5A 250V UL94 V-0

**CSA**
4A 250V UL94 V-0

**IEC**
4A 32V 1.5kV 3

## UTS 1832 - 18E32 Derating Curves

**Test conditions**

**Contact used:**
Machined contacts
**Wires used:**
0.518mm²

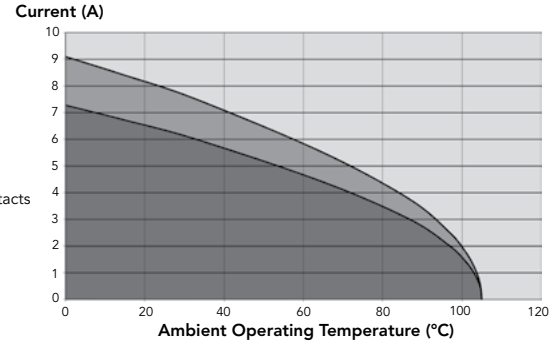


Current use | Limited use | Not recommended use

# LC

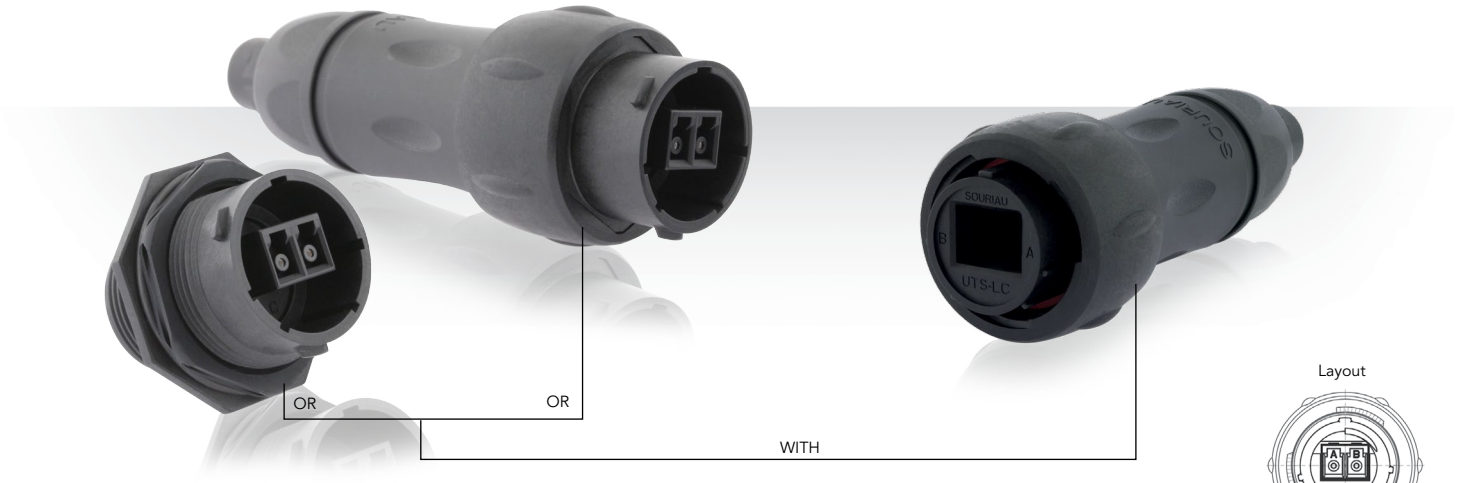


Layout

## Connector Part Numbers

| Connector type | Backshell | Part number | |
|---|---|---|---|
| | | Male insert | Female insert |
| Free hanging receptacle | Cable gland | **UTS1JC18LCN** | **-** |
| Plug | Cable gland | **-** | **UTS6JC18LCN** |
| Jam nut receptacle | Without | **UTS718LCN** | **-** |

# LC

## Dimensions

### Free Hanging Receptacle -UTS1JC18LCN

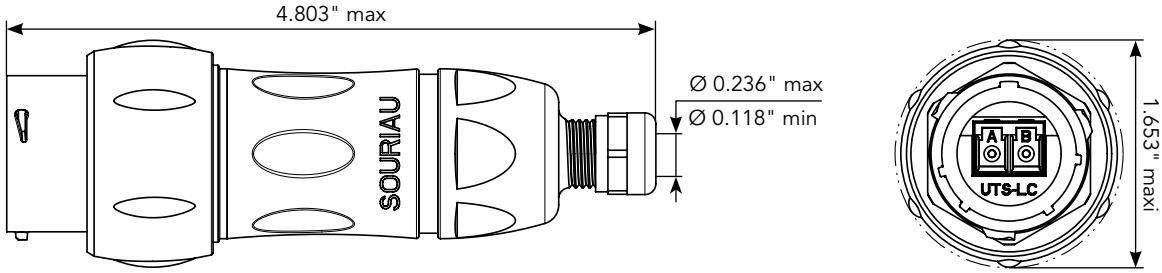


### Plug - UTS6JC18LCN

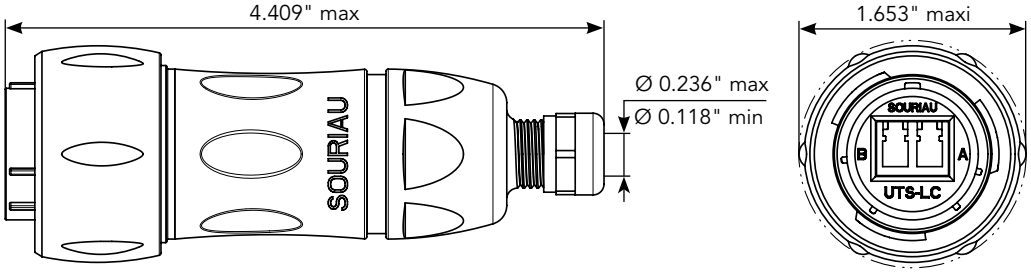


### Jam Nut Receptacle - UTS718LCN

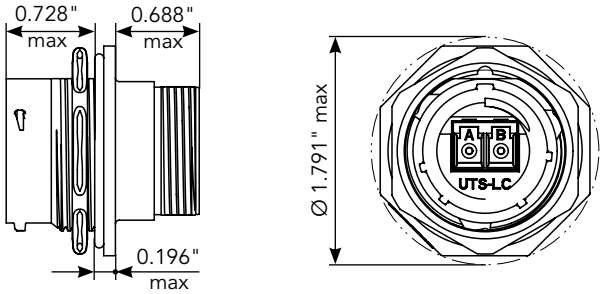


### Mated Connector Length - UTS7

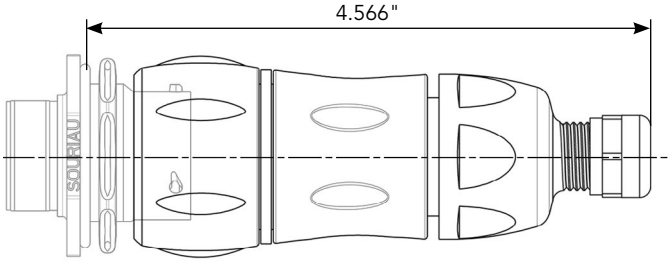


### Panel Cut Out

Jam Nut Receptacle - UTS7

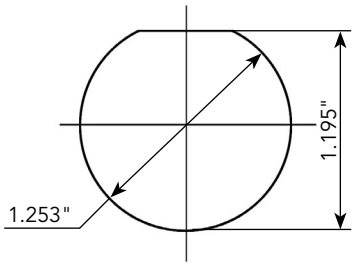

# LC

## Accessories

### Sealing Caps

For UTS6JC18LCN

| Part number |
| --- |
| UTS618DCG2 |

For UTS1JC18LCN & UTS718LCN

| Part number |
| --- |
| UTS18DCG2 |

# MPO

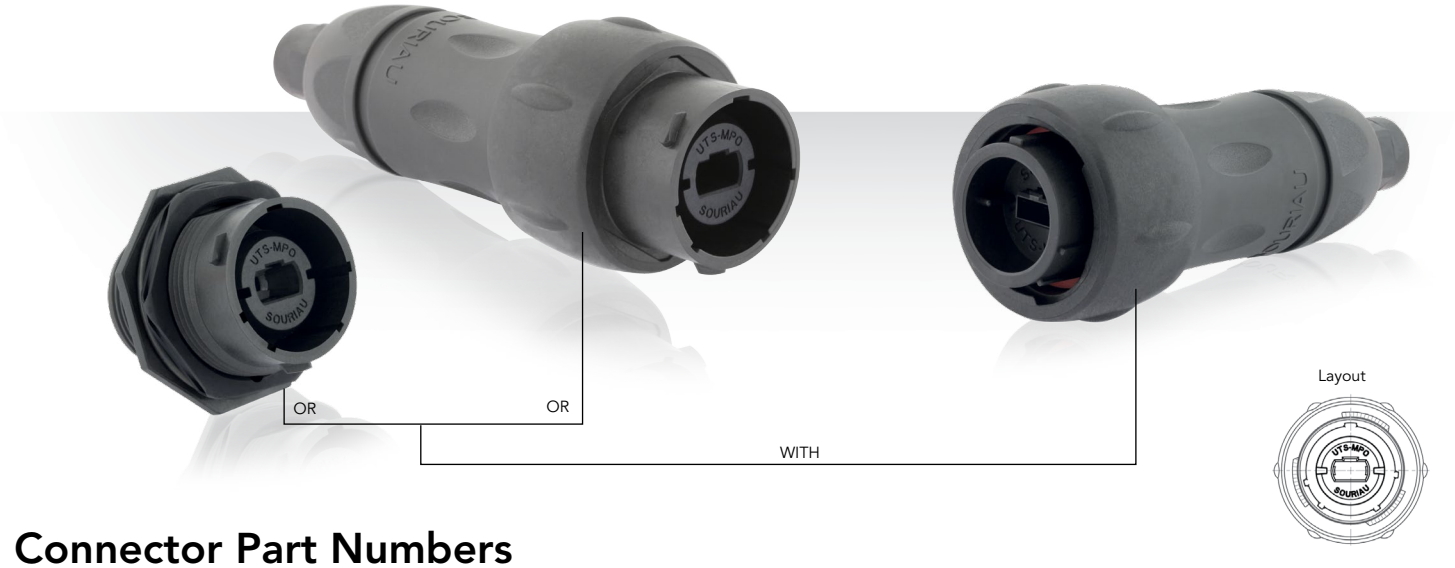


## Connector Part Numbers

| Connector type | Backshell | Part number | |
|---|---|---|---|
| | | Male insert | Female insert |
| Free hanging receptacle | Cable gland | **UTS1JC18MPN** | **-** |
| Plug | Cable gland | **-** | **UTS6JC18MPN** |
| Jam nut receptacle | Without | **UTS718MPN** | **-** |

# MPO

## Dimensions

### Free Hanging Receptacle -UTS1JC18MPN

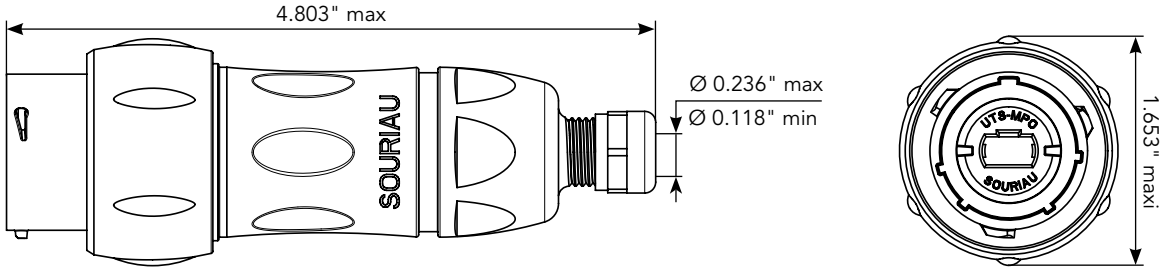


### Plug - UTS6JC18MPN

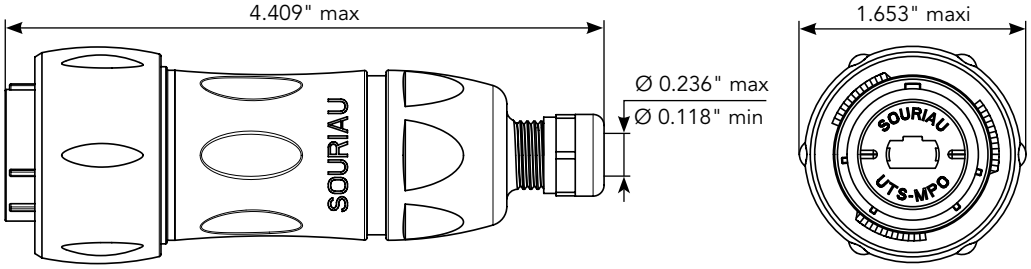


### Jam Nut Receptacle - UTS718MPN

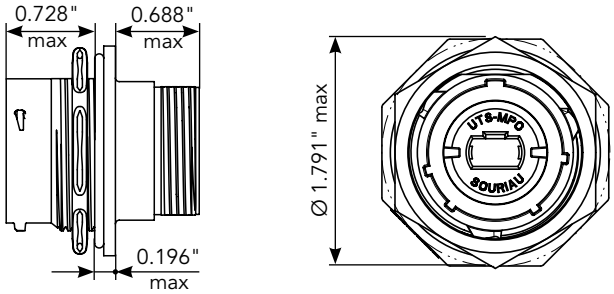


### Mated Connector Length - UTS7

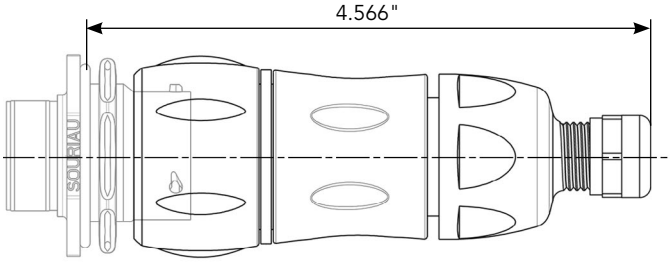


### Panel Cut Out

Jam Nut Receptacle - UTS7

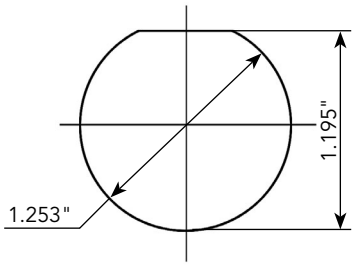

# MPO

## Accessories

### Sealing Caps

For UTS6JC18MPN

| Part number |
| --- |
| UTS618DCG2 |

For UTS1JC18MPN & UTS718MPN

| Part number |
| --- |
| UTS18DCG2 |

UTS SERIES

© 2014 SOURIAU - SOURIAU is a registratred trademark

UTS Series

# Contacts


- Description ..... 162
- Contact Plating Selector Guide ..... 163
- Contact Selector Guide ..... 164
- Packaging ..... 164
- Crimp Contacts ..... 165
- #16 Coaxial Contacts ..... 167
- PCB Contacts ..... 168
- Fiber Optic Contacts ..... 169

# Contacts

## Description

The UTS series is delivered with (solder and PCB versions) or without contact (crimp version) and offers the unique feature to use the same contact style in any layout with the same active part size (i.e. #20, #16, #12, etc.). This provides our customers with an easy solution to buy only one type of contact to equip all their connectors even if housings/shell sizes are different.

This provides the benefit of standardisation and subsequent reduced inventory costs. In addition, it eliminates the need for added tooling and simplifies the assembly process. SOURIAU contacts are designed for simple snap-in installation and further eliminate the need for insertion tooling.

In addition to the below "crimp" style contact options, the UTS series can also be equipped with PCB contacts.

Crimp contacts are available in different versions:

• Machined

• Stamped & Formed

• Coaxial

• Fiber Optic

## Contact Plating Selector Guide

Once the contact size has been selected, the next step is to decide on which type to use. SOURIAU offers two main types of electrical contacts:

- Machined
- Stamped & Formed

Machined contacts are generally chosen as a better solution for power applications or when lower quantities are needed.

Stamped & Formed contacts offer the ability to be crimped automatically which makes them more suitable for high volume production applications.

The next decision to make is: What plating should I choose?

The graph below can help guide you to plating recommendations based on application, mating cycles and current/voltage needs.

Note: do not mixes different platings (i.e. tin plated pin contacts with gold plated socket contacts).

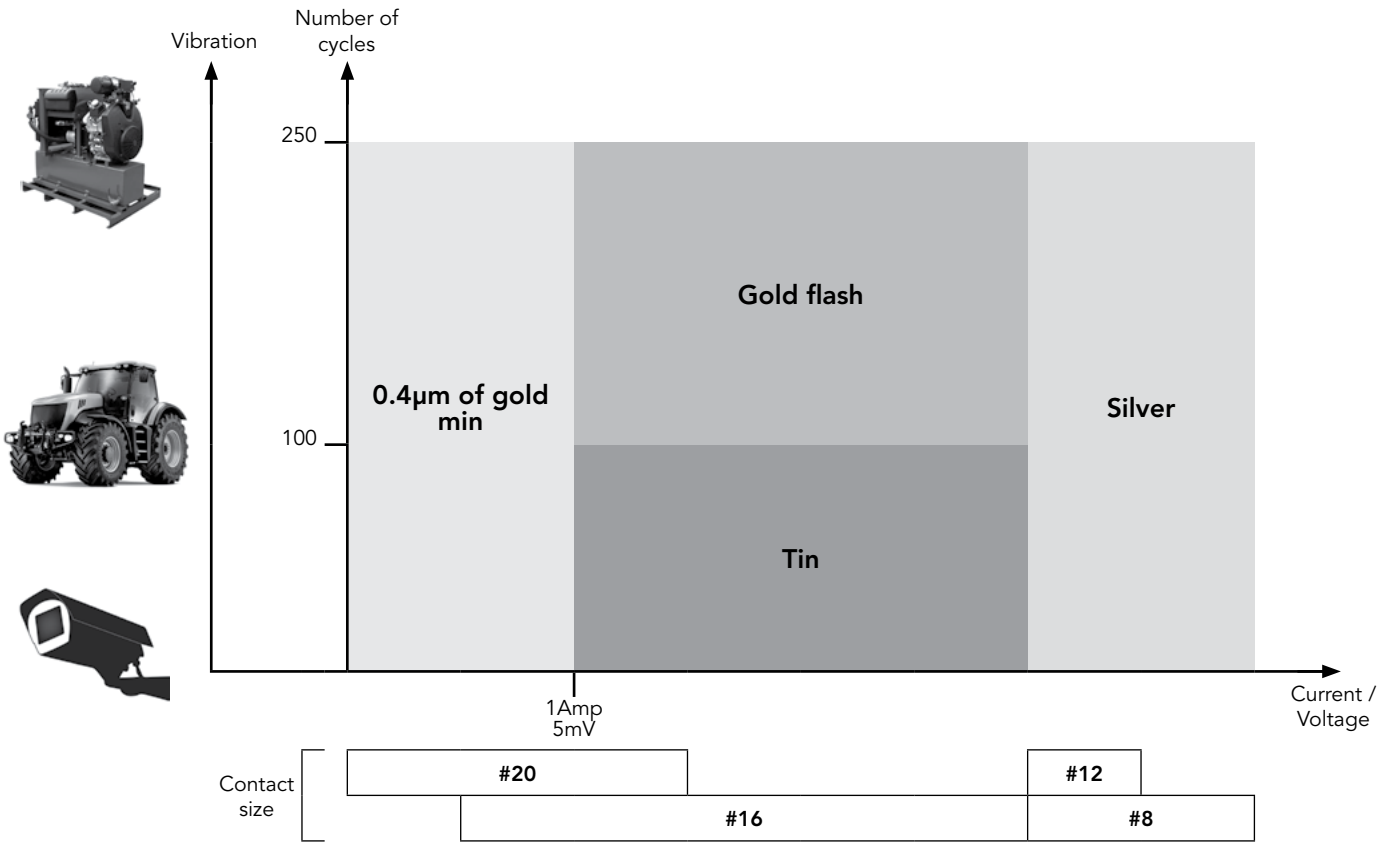

# Contact Selector Guide

## Contact supplied separately

| Electrical characteristics: contact resistance | | |
|---|---|---|
| **#20 Ø1mm** | Machined | < 6mΩ |
| | Stamped & Formed | < 6mΩ |
| **#16 Ø1.6mm** | Machined | < 3mΩ |
| | Stamped & Formed | < 6mΩ |
| **#12 Ø2.4mm** | Machined | < 5mΩ |
| **#8 Ø3.6mm** | Machined | < 5mΩ |

| Available platings (contact supplied separately) | |
|---|---|
| **A** | 2µ Ni + 2µ Ag |
| **J** | Gold flash over 2µ Ni |
| **K** | Min 0.4µ gold over 2µ Ni |
| **S31** | Active part: Gold flash over Ni<br>Crimp area: Nickel |
| **S18** | Active part: 0.75µ gold min over 2µ Ni<br>Crimp area: 1.3µ tin over Ni<br>Other: Nickel |
| **S25**<br>**S26** | Active part: 0.75µ Au over Ni<br>Crimp area: flash Au over Ni |
| **TK6** | 2-5µ Sn pre-plated |
| **D70** | Superseded by S31 |
| **S6** | Superseded by S18 |
| **Other platings on request (contact supplied separately)** | |
| **T** | T: 2µm Ni mini all over +<br>3 to 5 µm Sn all over |
| **D28** | 0.75µ gold over Ni |
| **NPC** | 2 µm Ni |

## Contact preloaded

| Electrical characteristics: contact resistance | | |
|---|---|---|
| **#20 Ø1mm** | Machined | < 4mΩ |
| **#16 Ø1.6mm** | Machined | < 3mΩ |

| Available plating (contact preloaded) |
|---|
| Min 0.4µ gold over 0.8µ Ni |

# Packaging

Due to the wide variety of applications, contact packaging is offered for small series (bulk package) and high volume production (reeled contacts):

**Size contacts #20 (Ø1mm) & #16 (Ø1.6mm)**

• 25 pieces loose package (Stamped & Formed contacts)

• 50 pieces bulk package (Machined contacts)

• 1,000 pieces bulk package (Machined contacts)

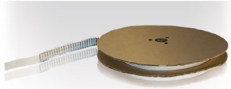

• 3,000 pieces reeled (Stamped & Formed contacts)

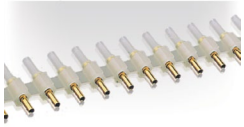

• 2,000 pieces reeled (Machined contacts)

**Size contacts #12 (Ø2.4mm) & #8 (Ø3.6mm)**

• 100 pieces bulk package (Machined contacts)

Note: 1,000 pieces bulk package available by adding 1000 at the end of the part number: e.g. RC16M23K1000
2,000 pieces reeled package available by adding K at the beginning of the part number: e.g. KRC16M23K

# Crimp Contacts

## Standard Version

| Contact size | Type | Wire size | | Part number | | Max wire Ø | Max insulator Ø | Available plating see page 156 |
|---|---|---|---|---|---|---|---|---|
| | | AWG | mm² | Male | Female | | | |
| #20 Ø1 mm | Machined | 26-24 | 0.13-0.20 | RM24W3K | RC24W3K | - | 1.58 max | K |
| | Stamped & Formed | 26-24 | 0.13-0.25 | SM24W3-(1) | SC24W3-(1) | - | 0.89-1.58 | TK6 S25 (female) S26 (male) |
| | | | | SM24WL3-(2) | SC24WL3-(2) | - | | |
| | Machined | 22-20 | 0.32-0.52 | RM20W3K | RC20W3K | - | 1.58 max | K |
| | Stamped & Formed | 22-20 | 0.35-0.5 | SM20W3-(1) | SC20W3-(1) | - | 1.17-2.08 | TK6 S25 (female) S26 (male) |
| | | | | SM20WL3-(2) | SC20WL3-(2) | - | | |
| | Machined | 20-18 | 0.50-0.93 | RM18W3K | RC18W3K | | 2.10 max | K |
| #16 Ø1.6 mm | Machined | 30-28 | 0.05-0.08 | RM28M1- | RC28M1- | 0.55 | 1.1 | K, J |
| | Machined | 26-24 | 0.13-0.2 | RM24M9- | RC24M9- | 0.8 | 1.6 | K, J |
| | Stamped & Formed | 26-24 | 0.13-0.25 | SM24M1-(1) SM24ML1-(2) | SC24M1-(1) SC24ML1-(2) | 0.89-1.28 | Insulation grip | S31, S18, TK6 |
| | Machined | 22-20 | 0.32-0.52 | RM20M13- | RC20M13- | 1.18 | 1.8 | K, J |
| | | | | RM20M12- | RC20M12- | | 2.2 | |
| | Stamped & Formed | 22-20 | 0.35-0.5 | SM20M1-(1) SM20ML1-(2) | SC20M1-(1) SC20ML1-(2) | 1.17-2.08 | Insulation grip | S31, S18, TK6 |
| | Machined | 20-16 | 0.52-1.5 | RM16M23- | RC16M23- | 1.8 | 3.2 | K, J |
| | Stamped & Formed | 18-16 | 0.8-1.5 | SM16M1-(1) SM16ML1-(2) | SC16M1-(1) SC16ML1-(2) | 3.0 | No insulation grip | S31, S18, TK6 |
| | Stamped & Formed | 18-16 | 0.8-1.5 | SM16M11-(1) SM16ML11-(2) | SC16M11-(1) SC16ML11-(2) | 2.0-3.0 | Insulation grip | S31, S18, TK6 |
| | Machined | 16-14 | 1.5-2.5 | RM14M30- | RC14M30- | 2.28 | 3.2 | K, J |
| | Stamped & Formed | 14 | 2.0-2.5 | SM14M1-(1) SM14ML1-(2) | SC14M1-(1) SC14ML1-(2) | 3.2 | No insulation grip | S31, S18, TK6 |
| #12 Ø2.4 mm | Machined | 22 | 0.13-0.4 | 82911457N- | 82911456- | - | 4.9 | A, K |
| | | 20 | 0.5 | 82911459N- | 82911458- | | | |
| | | 18 | 0.75-1.0 | 82911461N- | 82911460- | | | |
| | | 16 | 1.5 | 82911463N- | 82911462- | | | |
| | | 14 | 2.5 | 82911465N- | 82911464- | | | |
| | | 12 | 4 | 82911467N- | 82911466- | | | |
| #8 Ø3.6 mm | Machined | 16 | 1.5 | 82913601A | 82913600A | - | 6.5 | A |
| | | 14 | 2.5 | 82913603A | 82913602A | | | |
| | | 12 | 4 | 82913605A | 82913604A | | | |
| | | 10 | 6.0 | 82913607A | 82913606A | | | |
| | | 8 | 10.0 | 82913609A | 82913608A | | | |

(1) contact reeled (2) loose contact
Exemple: **RM24W3K** - Size #20, Machined, AWG24 wire.

Note: all dimensions are in mm

# Crimp Contacts (Continued)

## First Mate Last Break Contacts

| Contact size | Type | Wire size | | Part number | | Max wire Ø (mm) | Max insulator Ø (mm) | Color band | | Available plating see p. 156 |
|---|---|---|---|---|---|---|---|---|---|---|
| | | AWG | mm² | Male | Female | | | Front | Rear | |
| #16 Ø1.6 mm Longer male contact (+1mm) | Machined | 30-28 | 0.05-0.08 | RM28M1GE1K | - | 0.55 | 1.1 | - | Red | K |
| | | 26-24 | 0.13-0.2 | RM24M9GE1K | | 0.8 | 1.6 | Red | Red | |
| | | 22-20 | 0.32-0.52 | RM20M13GE1K | | 1.18 | 1.8 | Black | Red | |
| | | | | RM20M12GE1K | | | 2.2 | Blue | Red | |
| | | 20-16 | 0.52-1.5 | RM16M23GE1K | | 1.8 | 3.2 | - | Red | |
| | | 16-14 | 1.5-2.5 | RM14M30GE1K | | 2.28 | - | - | Red | |
| #16 Ø1.6 mm Shorter female contact (-0.7mm) | Machined | 30-28 | 0.05-0.08 | - | RC28M1GE7K | 0.55 | 1.1 | - | Blue | K |
| | | 26-24 | 0.13-0.2 | | RC24M9GE7K | 0.8 | 1.6 | Red | Blue | |
| | | 22-20 | 0.32-0.52 | | RC20M13GE7K | 1.18 | 1.8 | Black | Blue | |
| | | | | | RC20M12GE7K | | 2.2 | Blue | Blue | |
| | | 20-16 | 0.52-1.5 | | RC16M23GE7K | 1.8 | 3.2 | - | Blue | |
| | | 16-14 | 1.5-2.5 | | RC14M30GE7K | 2.28 | - | - | Blue | |

### How to make FMLB / LMFB connection

| Contact 1 / Contact 2 | Standard male contact | Standard female contact | Longer male contact |
|---|---|---|---|
| Standard male contact | | ✓ | |
| Standard female contact | ✓ | | ✓ FMLB |
| Shorter female contact | ✓ LMFB | | |

First Mate Last Break contacts should be chosen only if the cavity is not marked with the ground symbol. For cavities marked with the ground symbol, standard contacts will fulfill the same role as a first mate, last break contact used in a standard cavity.

**Ground symbol**

# #16 Coaxial Contacts

## Coaxial Contact Range

SOURIAU provides 2 types of coaxial contacts suitable for 50 or 75Ω, coaxial cable or twisted pair cable.

### Monocrimp coaxial contact

• The monocrimp one-piece coaxial contacts offer high reliability plus the economic advantage of a 95% reduction in installation time over conventional assembly methods.

• This economy is achieved by simultaneously crimping both the inner conductor and outer braid or drain wire.

### Multipiece crimp coaxial contact

• The inner conductor and outer braid is crimped individually.

• The thermoplastic insulating bushing in the outer body is designed to accept and permanently retain the inner contact.

• An outer ferrule is used to connect the braid to the outer contact and provide cable support to ensure against bending and vibration.

### Suitable for coaxial cable or twisted cable

• For jacket diameter from 1.78 to 3.05mm
Inner conductor up to 2.44mm diameter

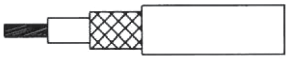

• For jacket diameter from 0.64 to 1.45mm
Inner conductor from AWG30 to AWG24

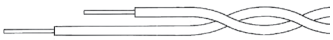

### Contacts for coaxial cable summary

| Contact type | Contact range | | Contact part number with cable combination | Cabling notice |
|---|---|---|---|---|
| | Male contact | Female contact | | |
| Multipiece | RMDXK10D28 | RCDXK1D28 | See page 200 | See pages 204 & 205 |
| Monocrimp | RMDX60xxD28 | RCDX60xxD28 | | See page 206 |

### Contacts for twisted pairs cable summary

| Contact type | Contact range | | Contact part number with cable combination | Cabling notice |
|---|---|---|---|---|
| | Male contact | Female contact | | |
| Multipiece | RMDXK10D28 + YORK090 | RCDXK1D28 + YORK090 | See page 201 | See page 202 |
| Monocrimp | RMDX60xxD28 | RCDX60xxD28 | | See page 203 |

# PCB Contacts

## PCB Contacts Supplied Separately - UTS Standard Series

### PCB soldering

The UTS Series can be used in a wave soldering process, but not reflow soldering process.
All high temperature processes are prohibited.

| Contact size | Part number | | Plating see page 164 |
|---|---|---|---|
| | Male | Female | |
| #20 Ø1mm | RMW50A7K<br>RMW5016K | RCW50A7K<br>RCW5016K | K |
| #16 Ø1.6mm | RM20M12E8K<br>RM20M12E83K<br>RM20M12E84K | RC20M12E8K<br>RC20M12E83K<br>RC20M12E84K<br>RC20M12E85K<br>RC20M12E86K<br>RC20M12E87K | K |
| #8 Ø3.6mm | 82911685NPC | 82911684NPC | 2 µm Ni |

### Minimal length G (mm)

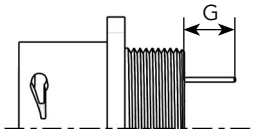


Dimension of dipsolder contacts out of connector
(contacts to be ordered separately).

**UTS0 with PCB contacts #16**

| Connector size | Pin contact | | | Socket contact | | | |
|---|---|---|---|---|---|---|---|
| | RM20M 12E8K* | RM20M 12E83K* | RM20M 12E84K* | RC20M 12E8K* | RC20M 12E83K* | RC20M 12E84K* | RC20M 12E87K* |
| 10 | 4.2 | 9.4 | 12.9 | 4.2 | 9.4 | 12.9 | 6.5 |
| 12 | 3.6 | 8.8 | 12.3 | 4.2 | 9.4 | 12.9 | 6.5 |
| 14 | 3.3 | 8.5 | 12.0 | 2.6 | 7.8 | 11.3 | 4.9 |
| 18 | 4.2 | 9.3 | 12.9 | 4.2 | 9.4 | 12.9 | 6.5 |

**UTS7 with PCB contacts #20 and #16**

| Connector size | Pin contact | | | | Socket contact | | |
|---|---|---|---|---|---|---|---|
| | RM20M 12E83K* | RM20M 12E84K* | RMW 50A7K* | RMW 5016K* | RC20M 12E84K* | RCW 50A7K* | RCW 5016K* |
| 10 | 7.3 | 10.8 | 8.4 | 9.3 | 3.6 | 8.4 | 9.3 |
| 12 | 7.3 | 10.8 | 8.4 | 9.3 | 3.9 | 8.4 | 9.3 |
| 14 | 7.3 | 10.8 | 8.4 | 9.3 | 3.6 | - | - |
| 18 | 8.1 | 11.6 | 8.4 | 9.3 | 3.6 | - | - |

* Plating indication see page 164

**UTS7 with PCB contacts #16 and #8**

| Connector type | Pin contact | | Socket contact | |
|---|---|---|---|---|
| | RM20M12E83K* | 82911685NPC* | RC20M12E87K* | 82911684NPC* |
| UTS7142G1P | - | 6.4 | - | - |
| UTS7142G1S | - | - | - | 8.2 |
| UTS7142G1SNPT | - | 5.8 | - | 5.4 |
| UTS718X2M3 | 4.9 | 4.5 | 3.6 | 5.2 |
| UTS7183G1SNPT | - | - | - | 4.17 |

* Plating indication see page 164

Note: all dimensions are in mm

# PCB Contacts Loaded - UTS Sealed Unmated Series

## PCB soldering

The UTS Series can be used in a wave soldering process, but not reflow soldering process.
All high temperature processes are prohibited.

## Nominal length G (mm)

Dimension of dipsolder contacts out of connector
(contacts to be ordered separately).

UTS0

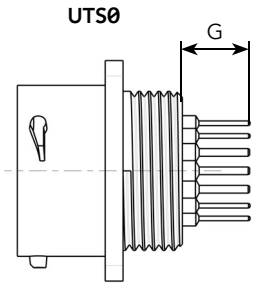


UTS7

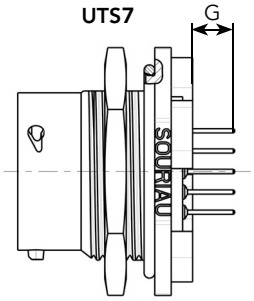


**UTS0**

| Connector size | Connector Part Number | Pin contact | | Socket contact | |
|---|---|---|---|---|---|
| | | G mini | G maxi | G mini | G maxi |
| 8 | 8D2 - 8D3<br>8D4 | 7.2 | 9.2 | 7 | 9 |
| | 8D3A/8D98<br>8D33 | 8.1 | 10.4 | 8.1 | 10.1 |
| 10 | 10D6 - 10D98<br>10D7 | 8.1 | 10.2 | 8.1 | 10.3 |
| 12 | 12D2 - 12D3<br>12D8 - 12D10 | 8.1 | 10.2 | 8.1 | 10.3 |
| | 12D4 | 8.2 | 10 | 8.1 | 10.3 |
| | 12D14 | 7.2 | 9 | 7.1 | 9.2 |
| 14 | 14D5 - 14D12 - 14D15<br>14D18 - 14D19 | 8.1 | 10.2 | 8.1 | 10.3 |
| | 14D7 | 8.2 | 10 | 8.1 | 10.3 |

**UTS7**

| Connector size | Connector Part Number | Pin contact | | Socket contact | |
|---|---|---|---|---|---|
| | | G mini | G maxi | G mini | G maxi |
| 8 | 8D2 - 8D3<br>8D4 | 3.8 | 6.1 | 3.7 | 5.9 |
| | 8D3A/8D98<br>8D33 | 4.7 | 7.3 | 4.7 | 7 |
| 10 | 10D6 - 10D98<br>10D7 | 4.7 | 7.3 | 4.7 | 7 |
| 12 | 12D2 - 12D3<br>12D8 - 12D10 | 4.7 | 7.3 | 4.8 | 7 |
| | 12D4 | 4.9 | 7.1 | 4.8 | 7 |
| | 12D14 | 3.9 | 6.2 | 3.8 | 6 |
| 14 | 14D5 - 14D12 - 14D15<br>14D18 - 14D19 | 4.8 | 7.3 | 4.9 | 7 |
| | 14D7 | 4.9 | 7.1 | 4.9 | 7 |

Note: all dimensions are in mm

# Fiber Optic Contacts

## Description

### Size 16 fiber optic contacts for UTS and other TRIM TRIO® connectors

Size 16 fiber optic contacts are designed for the integration of optical links in UTS and other TRIM TRIO® cable connectors.

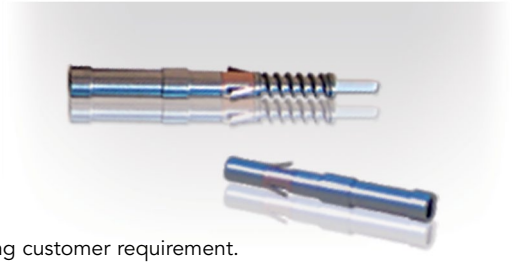

**The Fiber optic contacts are designed to accommodate:**

- Plastic Optical Fiber (POF) 1 mm core and 2.2 mm jacket

**Typical features and benefits are:**

- Socket contact is spring loaded to avoid any air gap between the two optical faces.
- Low insertion loss is provided by high precision pieces.
- Single jumpers, multiway harness and active device housings can be supplied regarding customer requirement.

## Technical Characteristics

### Performance

- Fiber type: ..... POF
- Wave length: ..... 650 nm
- Optical insertion loss (typ.): ..... 2 dB max.
- Jacketed external diameter: ..... 2.2mm
- Temperature range: ..... -25°C to +70°C
- Cable retention: ..... 49N
- Mating cycles without cleaning: ..... 50
- Max. mating cycles: ..... 500

### Construction

- Contact body: Copper alloy

### Connector accommodation

Any TRIM TRIO® size 16 contact can be used in any contact position in any connector in the TRIM TRIO® size 16 interconnection system: UTP, UTS, UTG, UTO, UTL.

## Ordering Information

**POF Contacts (Plastic Optical Fiber)**

**Male contact** ..... RMPOF1000

**Female contact** ..... RCPOF1000B

## POF Contact (Plastic Optical Fiber)

**STANDARD TOOLING KIT - P/N 80MS0004**
**The *standard tooling kit* is made of the part numbers below that can be ordered separately as well.**

| Part numbers | Descriptions |
|---|---|
| 80WD0005 | Stripping tool |
| 80WD0025 | Automatic stripping tool for Ø 0.5 mm, 0.6 mm, 0.7 mm & 3.8 mm |
| 80WM0006 | Ruler |
| 80WP0005 | Polishing plate |
| 80WP0013 | Non slip base (to hold the polishing plate) |
| 80WP0014 | Polishing disk (grain size 9µm) |
| 80WP0018 | Polishing tool |
| 80WP0019 | Polishing disk (grain size 30µm) |
| 80WS0002 | Crimping plier |

**SPECIFIC TOOLING LIST - Can only be ordered separately**

| Part numbers | Descriptions |
|---|---|
| 80WG0010 | Needle |
| 80WG0015 | Capsule |
| 80WG0016 | Syringe |
| 80WN0005 | Dry air spray |
| 80WN0006 | Optical paper |
| 80WN0012 | Dropper bottle |
| 80WN0008 | Wiping solvent |

UTS SERIES

© 2014 SOURIAU - SOURIAU is a registratred trademark

UTS Series

# Technical Information


Tooling ..... 174
Crimping Instructions ..... 176
Handle & Interchangeable Heads ..... 178
Extraction Tools ..... 179
Overmoulded Harnesses Dimensions ..... 179
Assembly Instructions ..... 180
Mated Connector Lengths ..... 184
Mating Procedure ..... 185
Rated Current & Working Voltage ..... 186
UV Resistance ..... 187
UL94 + UL1977 ..... 188
IEC 61984 & IP Codes Explained ..... 191
IEC 61140 Explained ..... 193
What is NEMA Rating ? ..... 194
Ethernet for the Layman ..... 195

## Automatic Crimping Tools

**Mecal is a leader in manufacturing tooling for crimping terminals over a stripped wire.**
Established in 1976, Mecal has become one of the world's leading companies dedicated to the design and manufacture of semi automatic production tools for strip fed, open barrel crimp terminals, serving the Automotive, Telecom and Datacom industries.

**The extreme environment interconnect specialist "from deep sea to deep space".**
SOURIAU designs, manufactures and markets high performance interconnect solutions for severe environments dedicated to the aerospace, defense, light and heavy industry markets.

**SOURIAU has been working in partnership with Mecal for many years. With sales offices located in all major industrial regions of the world, the combined strengths of both organizations has resulted in a truly global solution to all your production tooling needs.**

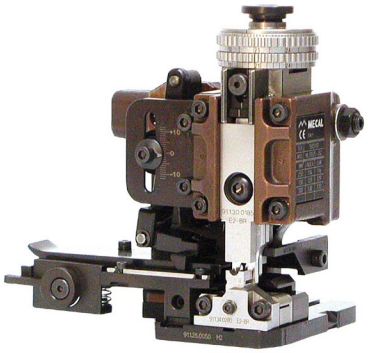

**Mini Applicator**

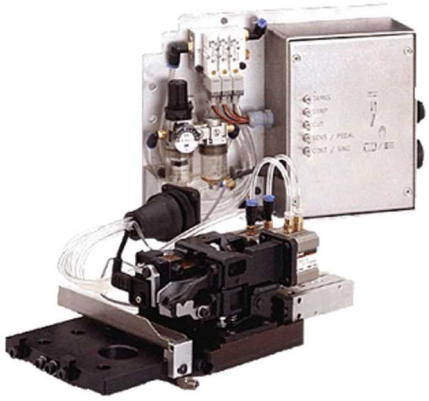

**Stripper**

**Presses**

Mecal sales network:

http://www.mecal.net/index.php/en/europe

# Tooling

## Crimp Tool Table

### Standard contacts

| Contact size | Part number | Head* | Handles* | Extraction tools |
|---|---|---|---|---|
| #20 Ø 1mm | RM/RC 24W3K | S20RCM | SHANDLES | RX20D44 |
| | RM/RC 20W3K | | | |
| | RM/RC 18W3K | | | |
| | SM 24WL3S*(1)<br>SC 24WL3S*(1) | S20SCM20 | | |
| | SM/SC 20WL3S*(1) | | | |
| #16 Ø 1.6mm | RM/RC 28M1* | S16RCM20 | | RX2025GE1 |
| | RM/RC 24M9* | | | |
| | RM/RC 20M13* | | | |
| | RM/RC 20M12* | | | |
| | RM/RC 16M23* | S16RCM16 | | |
| | RM/RC 14M30* | S16RCM14 | | |
| | SM/SC 24ML1*(1) | S16SCM20 | | |
| | SM/SC 20ML1*(1) | | | |
| | SM/SC 16ML1*(1) | S16SCML1 | | |
| | SM/SC 14ML1*(1) | | | |
| | SM/SC 16ML11*(1) | S16SCML11 | | |

(1) loose contact * endurance of SHANDLES & Head tools = 50,000 cycles

| Contact size | Part number | Tool with separate locator | | | Extraction tools |
|---|---|---|---|---|---|
| | | Hand tool | Positioner + locator setting | | |
| #12 Ø 2.4mm | 82911457N* / 82911456* | M317 | VGE10077A | 1-2 | 51060210924 |
| | 82911459N* / 82911458* | | | 2 | |
| | 82911461N* / 82911460* | | | 2 | |
| | 82911463N* / 82911462* | | | 3 | |
| | 82911465N* / 82911464* | | | 3 | |
| | 82911467N* / 82911466* | | | 4 | |
| #8 Ø 3.6mm | 82913601A / 82913600A | M317 | VGE10078A | 3 | 51060210936 |
| | 82913603A / 82913602A | | | 3 | |
| | 82913605A / 82913604A | | | 4 | |
| | 82913607A / 82913606A | | | 5 | |
| | 82913609A / 82913608A | | | 6/7 | |

* see page 157 for plating options and other contact details

### Specific contacts (First mate Last break contacts)

| Contact size | Part number* | Hand tools (SHANDLES) head | Tool with separate locator | | | Extraction tools |
|---|---|---|---|---|---|---|
| | | | Hand tool | Positioner + locator setting | | |
| #16 Ø 1.6mm Longer RM contact | RM28M1GE1K | S16RCM20 | - | - | - | RX2025GE1 |
| | RM24M9GE1K | | | | | |
| | RM20M13GE1K | | | | | |
| | RM16M23GE1K<br>RM20M12GE1K | S16RCM16 | MH860 | MH86186 | 6/8 | |
| | RM14M30GE1K | S16RCM14 | - | - | - | |
| #16 Ø 1.6mm Shorter RC contact | RC28M1GE7K | S16RCM20 | MH860 | MH86164G | 4/6 | |
| | RC24M9GE7K | | | | 5/6 | |
| | RC20M13GE7K<br>RC20M12GE7K | | | | 5/7 | |
| | RC16M23GE7K | S16RCM16 | | | 6/8 | |
| | RC14M30GE7K | S16RCM14 | M317 | UH25 | 3 | |

* see page 166 for plating options and other contact details

### Coaxial contacts

See coax contacts details on page 167 and cabling notice pages 202 to 206.

# Crimping instructions

## Wire Stripping Crimp Version

| | Part number | | Stripping length L |
|---|---|---|---|
| | Male | Female | |
| **Machined contact** | **#20 (Ø 1mm)** | | |
| | RM24W3- / RM20W3- RM18W3- | RC24W3- / RC20W3- RC18W3- | 4.8 |
| | **#16 (Ø 1.6mm)** | | |
| | RM28M1- / RM24M9- RM20M13- / RM20M12- | RC28M1- / RC24M9- RC20M13- / RC20M12- | 4.8 |
| | RM16M23- /RM14M30- | RC16M23- /RC14M30- | 7.1 |
| | **#8 (Ø 3.6mm)** | | |
| | 82913601- / 82913603- 82913605- / 82913607- 82913609- | 82913600- / 82913602- 82913604- / 82913606- 82913608- | 6.5 to 7.5 |
| **Stamped & Formed** | **#16 (Ø 1.6mm)** | | |
| **With insulation support** | SM24M1- / SM24ML1- SM20M1- / SM20ML1- | SC24M1- / SC24ML1- SC20M1- / SC20ML1- | 4 |
| | SM16M11- / SM16ML11- | SC16M11- / SC16ML11- | 4.65 |
| | **#20 (Ø 1mm)** | | |
| | SM24W3- / SM24WL3- SM20W3- / SM20WL3- | SC24W3- / SC24WL3- SC20W3- / SC20WL3- | 4 |
| **Without insulation support** | **#16 (Ø 1.6mm)** | | |
| | SM16M1- / SM16ML1- | SC16M1- / SC16ML1- | 6.35 |
| | SM14M1- / SM14ML1- | SC14M1- / SC14ML1- | 6.35 |
| **Power contacts** | **#12 (Ø 2.4mm)** | | |
| | 82911457- / 82911459- 82911461- / 82911463- 82911465- / 82911467- | 82911456- / 82911458- 82911460- / 82911462- 82911464- / 82911466- | 7 to 8 |
| | **#8 (Ø 3.6mm)** | | |
| | 82913601- / 82913603- 82913605- / 82913607- 82913609- | 82913600- / 82913602- 82913604- / 82913606- 82913608- | 6.5 to 7.5 |

Note: See page 165 for plating options and other contact details

## Wire Stripping Solder and Screw Versions

| | | Stripping length L |
|---|---|---|
| **Solder contact delivered with connector** | **#16 (Ø 1.6mm) & #20 (Ø 1mm)** | |
| 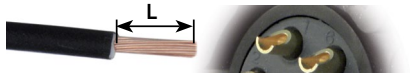  | | 5 |
| **Screw contact delivered with connector** | **#16 (Ø 1.6mm)** | |
| | | 5.8 |

Note: all dimensions are in mm

## Crimping

One of the key factors which affects the performance of a connector is the way contacts are terminated. Crimped connections are nowadays seen as the best solution to ensure quality throughout the lifetime of the product. Here are some reasons why we recommend this method of termination for UTS connectors:

**Advantages (Extract from the IEC 60352-2):**
- Efficient processing of connections at each production level
- Processing by fully-automatic or semi- automatic crimping machines, or with hand operated tools
- No cold-soldered joints
- No degradation of the spring characteristic of female contacts by the soldering temperature
- No health risk from heavy metal and flux steam
- Preservation of conductor flexibility behind the crimped connection
- No burnt, discolored and overheated wire insulation
- Good connections with reproducible electrical and mechanical performances
- Easy production control.

To ensure that the crimp tooling is performing according to original specifications, it is important to carry out regular checks. A common way to check the performance of tooling is with a simple pull test, ideally using a dedicated electric pull tester. Minimum recommended pull forces are indicated in the tables below:

Machined contact

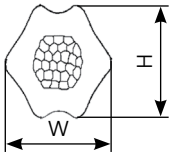


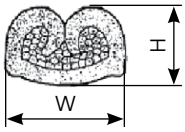


Stamped & Formed contact

| Active contact part | Contact type | Die location on heads | Wire section range | Section (mm²) | Tensile straight test (mini) | Height (mm) H (±0.075) | Width (mm) W (±0.075) | Tooling head p/n |
|---|---|---|---|---|---|---|---|---|
| Machined contacts size #20 Ø 1 mm | RM24W3K RC24W3K | 26/24 | AWG 26 | 0.12 min | 15 N | 0.95 | 1.27 | S20RCM |
| | | | AWG 24 | 0.25 max | 32 N | | | |
| | RM20W3K RC20W3K | 22/20 | AWG 22 | 0.32 min | 40 N | 1.26 | 1.78 | |
| | | | AWG 20 | 0.50 max | 60 N | | | |
| | RM18W3K RC18W3K | 20/18 | AWG 20 | 0.50 max | 60 N | 1.35 | 1.86 | |
| | | | AWG 18 | 0.82 max | 90 N | | | |
| S & F contacts size #20 Ø 1 mm | SM24WL3TK6* SC24WL3TK6* | 26/24 | AWG 26 | 0.12 min | 15 N | 0.80 | 1.49 | S20SCM20 |
| | | | AWG 24 | 0.25 max | 32 N | | | |
| | SM20WL3TK6* SC20WL3TK6* | 22/20 | AWG 22 | 0.32 min | 40 N | 1.01 | 1.53 | |
| | | | AWG 20 | 0.50 max | 60 N | | | |
| Machined contacts size #16 Ø 1.6 mm | RM28M1K* RC28M1K* | 30/28 | AWG 30 | 0.05 min | 11 N | 1.14 | 1.41 | S16RCM20 |
| | | | AWG 28 | 0.08 max | 11 N | | | |
| | RM24M9K* RC24M9K* | 26/24 | AWG 26 | 0.12 min | 15 N | 1.15 | 1.41 | |
| | | | AWG 24 | 0.25 max | 32 N | | | |
| | RM20M13K* RC20M13K* | 22/20 | AWG 22 | 0.32 min | 40 N | 1.26 | 1.76 | |
| | | | AWG 20 | 0.50 max | 60 N | | | |
| | RM20M12K* RC20M12K* | | AWG 22 | 0.32 min | 40 N | | | |
| | | | AWG 20 | 0.50 max | 60 N | | | |
| | RM16M23K* RC16M23K* | 20 | AWG 20 | 0.50 max | 60 N | 1.66 | 2.18 | S16RCM16 |
| | | 18 | AWG 18 | 0.82 max | 90 N | 1.80 | 2.28 | |
| | | 16 | AWG 16 | 1.50 max | 150 N | 1.96 | 2.43 | |
| | RM14M30K* RC14M30K* | 16 | AWG 16 | 1.50 min | 150 N | 2.10 | 2.68 | S16RCM14 |
| | | 14 | AWG 14 | 2.50 min | 230 N | 2.30 | 2.78 | |
| S & F contacts size #16 Ø 1.6 mm | SM24ML1TK6* SC24ML1TK6* | 26/24 | AWG 26 | 0.12 min | 15 N | 0.84 | 1.50 | S16SCM20 |
| | | | AWG 24 | 0.25 max | 32 N | | | |
| | SM20ML1TK6* SC20ML1TK6* | 22/20 | AWG 22 | 0.32 min | 40 N | 1.02 | 1.54 | |
| | | | AWG 20 | 0.50 max | 60 N | | | |
| | SM16ML11TK6* SC16ML11TK6* | 18 | AWG 18 | 0.82 min | 90 N | 1.32 | 2.09 | S16SCML11 |
| | | 16 | AWG 16 | 1.50 max | 150 N | 1.36 | 2.10 | |
| | SM16ML1TK6* SC16ML1TK6* | 18 | AWG 18 | 0.82 min | 90 N | 1.49 | 2.02 | S16SCML1 |
| | | 16 | AWG 16 | 1.50 max | 150 N | 1.7 | 2.05 | |
| | SM14ML1TK6* SC14ML1TK6* | 14 | AWG 14 | 2.50 max | 230 N | 1.79 | 2.58 | |

*: example of plating options, for other plating see page 164

# Handle & Interchangeable Heads

## User Guide

1) Fully close then release the tool, keep it open.
Open the 2 pins.

2) Choose the adapter head (sold separately), keep vertical and slide it into the handle until the mechanical end.

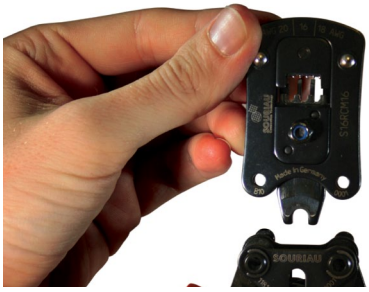

3) Close the two pins simultaneously to maintain the head.

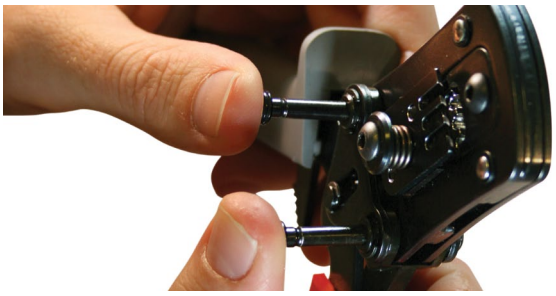

4) Strip the cable properly check the recommended size in the catalog on page 176.

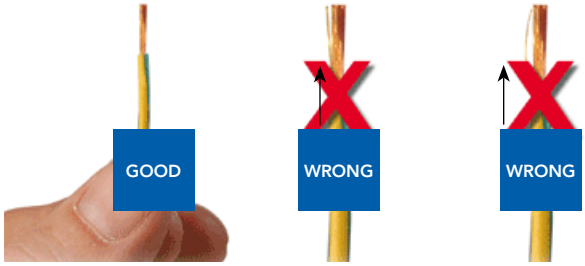


5) Place conductors, with no deteriorations, in the bucket contact.
All strands to be located in the crimp bucket.

6) Position the contact in the bottom of the tool by checking its orientation.

7) To crimp contact assembly-cable, tighten sharply the clip to the end of the mechanism (maxi 175N).

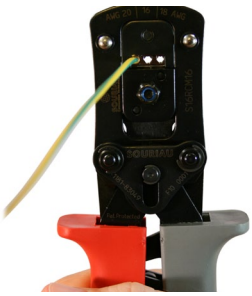

8) To control crimp quality, slighty pull cable with two fingers to control retention.

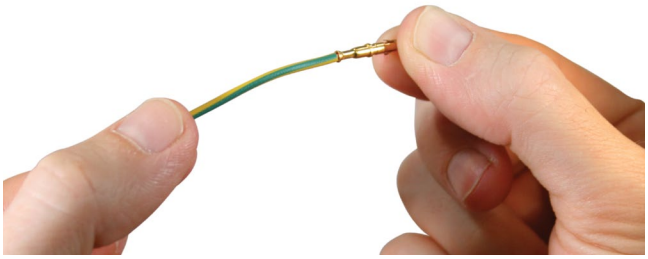

# Extraction Tools

| Contact size | Extractor |
|---|---|
| #20<br>Ø 1 mm | RX20D44 |
| #16<br>Ø 1.6 mm | RX2025GE1 |
| #12<br>Ø 2.4mm | 51060210924 |
| #8<br>Ø 3.6mm | 51060210936 |

## Contact extraction instruction

Place the tool into the cavity from front face of the connector, push on the handle, then remove the contact.

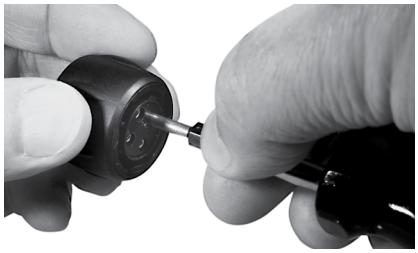

# Overmoulded Cable Assembly Dimensions

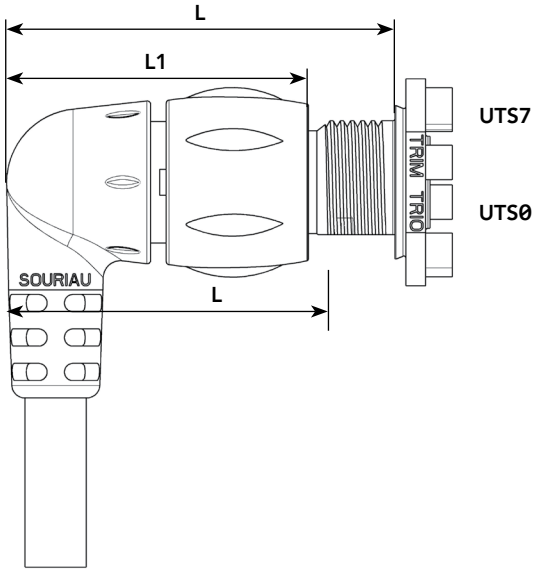


| Shell size | UTS0 | | | | UTS7 | | | |
|---|---|---|---|---|---|---|---|---|
| | L max | L1 max | L2 max | L3 max | L max | L1 max | L2 max | L3 max |
| 8 | 42.8 | 36.8 | 80.7 | 57.2 | 46.8 | 36.8 | 85.8 | 57.2 |
| 10 | 55.8 | 50.3 | 98.6 | 92 | 60.5 | 50.3 | 102.7 | 92 |
| 12 | 57.1 | 51.4 | 99.3 | 93.7 | 61.4 | 51.4 | 106.4 | 93.7 |
| 14 | 62.5 | 56.3 | 100.3 | 94.6 | 67.6 | 56.3 | 104.8 | 94.6 |

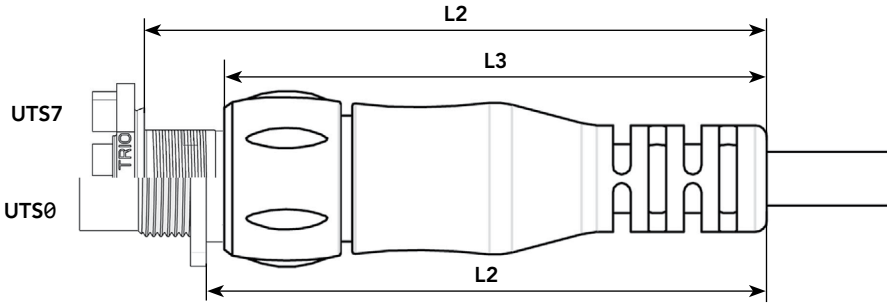


Note: all dimensions are in mm

# Assembly Instructions

## UTS0 Assembly (Mounting Suggestion)

- Strip wires, crimp or solder contacts (see pages 176 & 177)
- Insert contacts into connector cavities (insert manually or use tool RTM205 crimp contacts)
- Place receptacle in the panel cut-out
- Secure receptacle with screws (not supplied)
  Tighten screws: M2.5 (recommended torque: see table below)
- For complete sealing of the system use optional gasket and sealed screw solution (not sold by SOURIAU).

### Front mounting: Crimp version

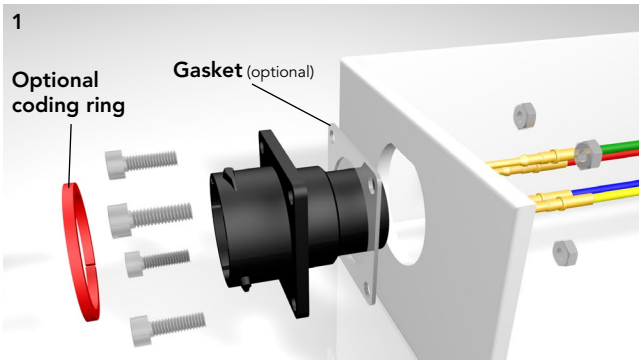


### Rear mounting: Crimp version

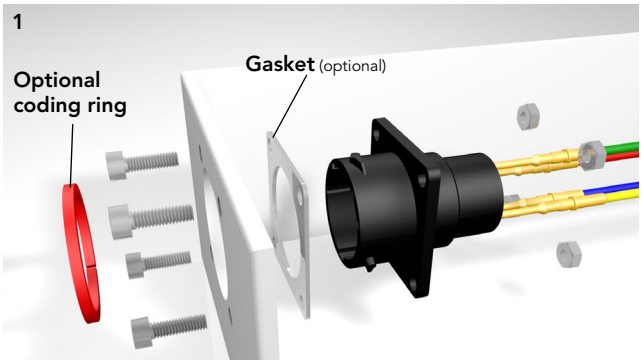


### Front mounting: Solder version

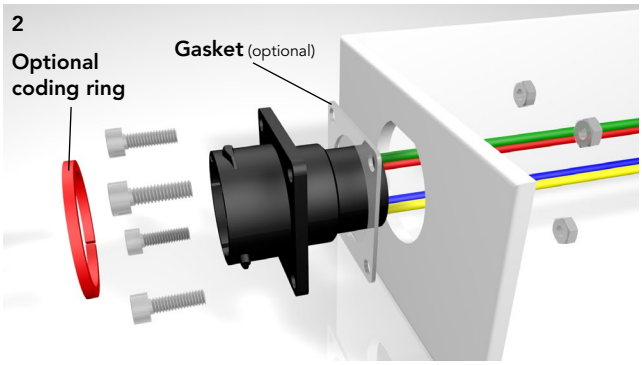


### Rear mounting: Solder version

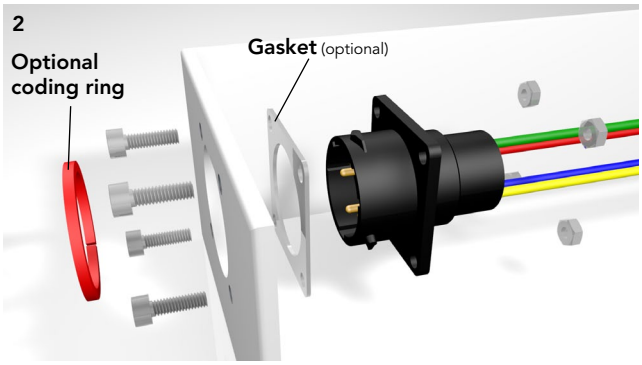


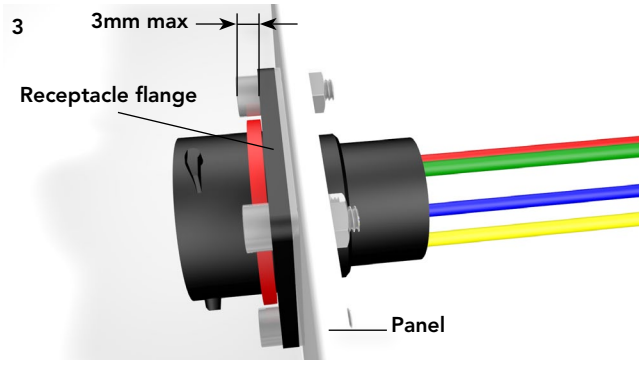


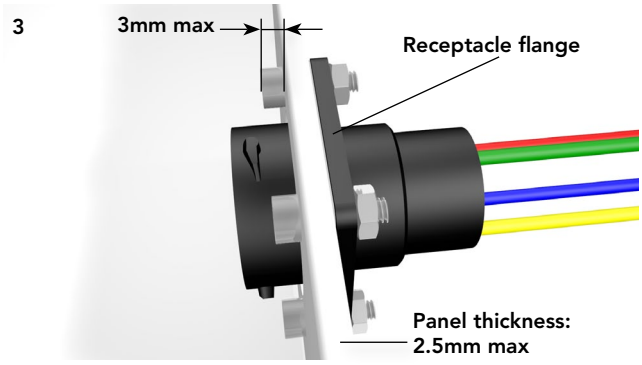


| | Shell size | | | | |
|---|---|---|---|---|---|
| | 10 | 12 | 14 | 16 | 18 |
| Screw tightening torque (Nm) | 0.30/0.40 | 0.30/0.40 | 0.30/0.40 | 0.30/0.40 | 0.35/0.45 |

## UTS7 Assembly (Mounting Suggestion)

- Strip wires and crimp contacts (see pages 176 & 177)
- Insert contacts into connector cavities (insert manually or use tool RTM205 crimp contacts )
- Seat o-ring, place receptacle in the panel cut-out
- Tighten jam nut

| Shell size | Jam nut torque (Nm) maxi | Exterior jam nut dim. (mm) | Ø Wire | |
|---|---|---|---|---|
| | | | Standard version | Discrete wire sealing |
| 8 | 1.5 | 19.0 | 3.2 mm max. | from 1.7 mm to 3.0 mm |
| 10 | 3 | 22.2 | | |
| 12 | 4 | 27.0 | | |
| 14 | 5 | 30.1 | | |
| 18 | 5 | 36.5 | | |

**Threaded receptacle**

| Shell size | Jam nut torque (Nm) maxi | Threading | P mini (mm) |
|---|---|---|---|
| 8 | 2.5 | M12 x 1.5 | 7.7 |
| 10 | 3.75 | M16 x 1.5 | |
| 12 | 3.75 | M20 x 1.5 | 10.4 |
| 14 | 4.18 | 1/2" | 8.3 |
| 18 | 4.76 | 3/4" | 11.6 |

**Crimp or solder version**

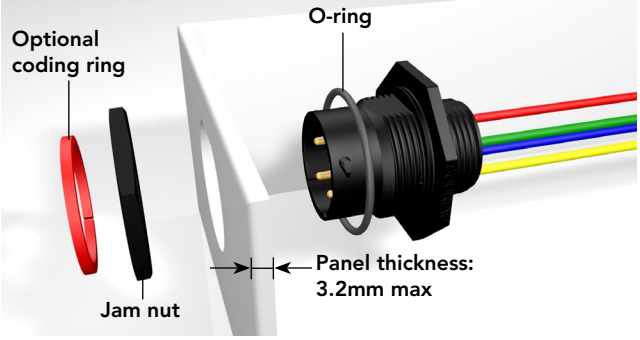


**Threaded version**

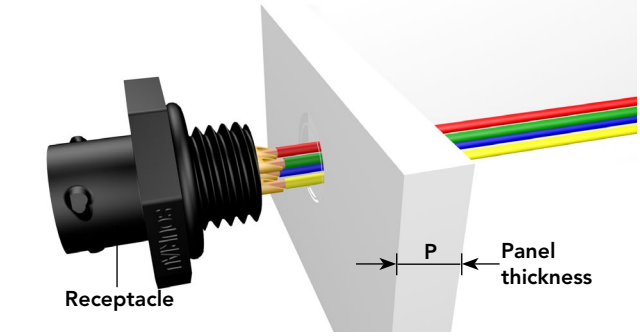


## UTS6 or UTS7 with GN Backshell Assembly

- Strip wires and crimp contacts (see pages 176 & 177)
- Insert first contact into the grommet (first contact in cavity A, no tool is required). Then insert the contact in the connector cavity A (insert manually or use tool RTM205)
- Insert the other contacts
- Tighten the nut to rear of either UTS6 or UTS7 (recommended torque values to be applied according to the table below).

| Shell size | layout | Nut tightening torque (Nm) | Ø Wire |
|---|---|---|---|
| 10 | 4 | 1 | From 1.7 mm to 3.0 mm |
| 12 | 8 | 1.5 | |
| 14 | 7 | 1.5 | |
| 14 | 12 | 1.5 | |

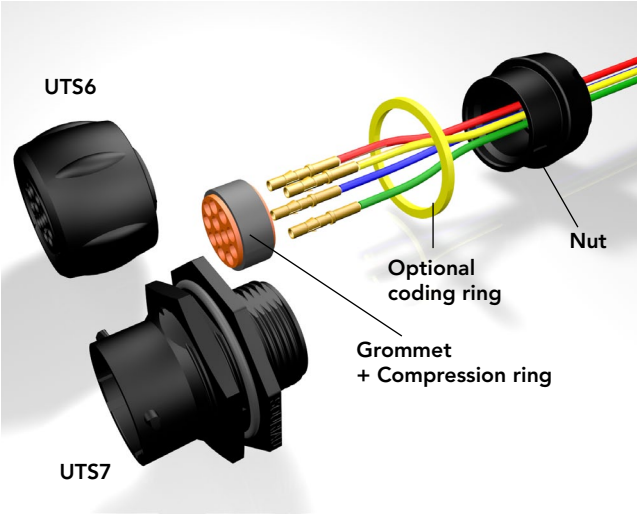

# Assembly Instructions (Continued)

## UTS1JC or UTS6JC Assembly: Crimp Version

- Slide accessories onto the cable

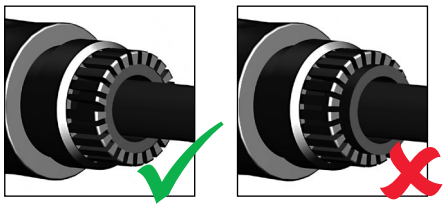

Make sure the seal is positioned as shown.

- Mate the plug with a corresponding counter part
- Strip external cable jacket
- Strip wires and crimp contacts (see pages 176 & 177)
- Insert contacts into connector cavities (insert manually or use tool RTM205)
- Tighten adapter with plug UTS6 or receptacle UTS1, choose right seal (waste the other seal)
- Tighten the nut to rear of either UTS1 or UTS6 (recommended torque values to be applied according table to the right)
- Caution: only one of both delivered gasket should be used !

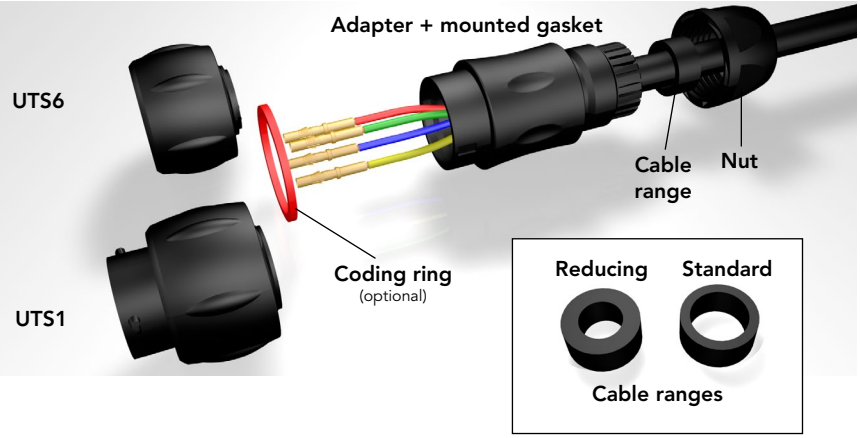


| Shell size | Recommended jacket strip length (mm) | | Adapter tightening torque (Nm) | Nut tightening torque (Nm) | Ø Cable range Standard seal | Ø Cable range Reducing seal | Ø Wire |
|---|---|---|---|---|---|---|---|
| | Male | Female | | | | | |
| 10 | 21 | 29 | 1.5 | 1 | 2.5/8.0 | 1.5/5.0 | From 1.7 mm to 3.0 mm |
| 12 | 25 | 33 | 2 | 2.5 | 5.0/12.0 | 3.0/9.0 | |
| 14 | 29 | 36 | 3 | 2.5 | 7.0/14.0 | 5.0/12.0 | |
| 18 | 37 | 45 | 4 | 3.5 | 9.0/18.0 | 7.0/16.0 | |

## UTS6JC Assembly: Solder Version

- Slide accessories onto the cable

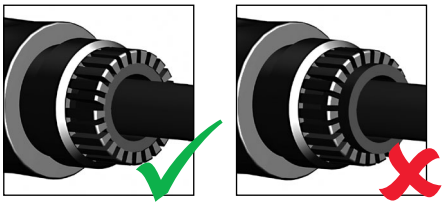

Make sure the seal is positioned as shown.

- Mate the plug with a corresponding receptacle
- Strip external cable jacket
- Strip wires and crimp contacts (see pages 176 & 177)
- Insert contacts into connector cavities (insert manually or use tool RTM205)
- Tighten adapter with plug, choose right seal (waste the other seal)
- Tighten the nut to rear of either UTS6 (recommended torque values to be applied according table to the right)
- Caution: only one of both delivered gasket should be used !

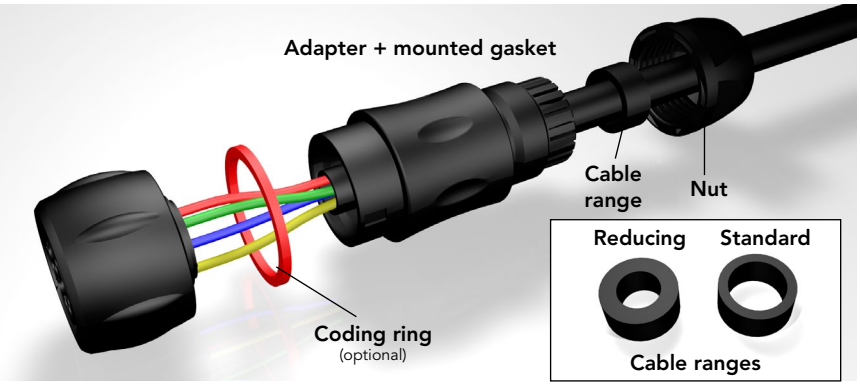


| Shell size | Recommended jacket strip length (mm) | Adapter tightening torque (Nm) | Nut tightening torque (Nm) | Ø Cable range Standard seal | Ø Cable range Reducing seal | Ø Wire |
|---|---|---|---|---|---|---|
| | Male | | | | | |
| 8 | 17 | 1 | 0.75 | 2.5/6.5 | 1.5/5.0 | From 1.7 mm to 3.0 mm |
| 10 | 21 | 1.5 | 1 | 2.5/8.0 | 1.5/5.0 | |
| 12 | 25 | 2 | 2.5 | 5.0/12.0 | 3.0/9.0 | |
| 14 | 29 | 3 | 2.5 | 7.0/14.0 | 5.0/12.0 | |

Note: all dimensions are in mm

## UTS6JC Screw Termination Assembly

- Mate the plug with a corresponding receptacle equiped with its contacts
- Choose and place right seal depending on cable diameter (see table below)

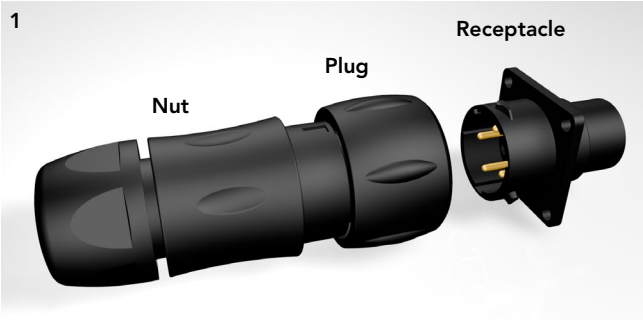


- Slide accessories on the cable
- Strip external jacket (see table below).

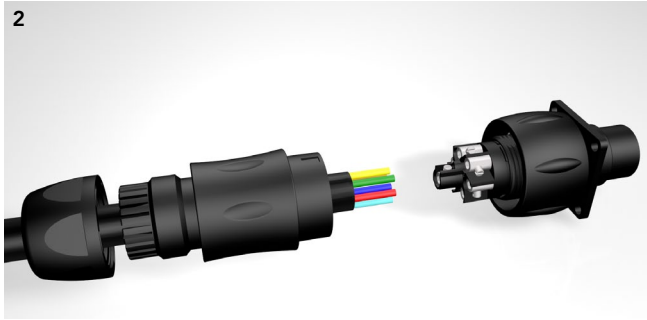


- Strip the wires (strip length 5.8 mm)

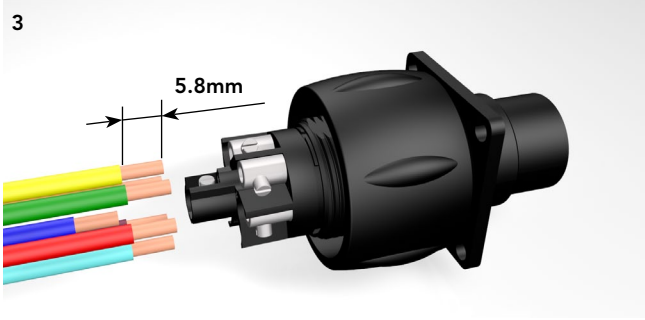


- Place the conductors in the contact barrel. Make sure all conductor strands are inside the barrel
- Tight the contact screws, advised torque 20 Ncm

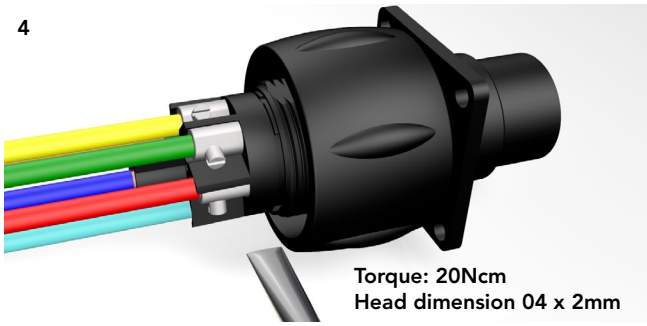


- Check the mechanical cable retention, by gently pull the cable with 2 fingers
- Tighten adaptater with the plug (recommended torque: see table)

- Tighten backshell nut with adapter (recommended torque: see table below) (cables should not turn into the backshell during this operation).

| Shell size | Recommended jacket strip length (mm) | | Adapter tightening torque (Nm) | Nut tightening torque (Nm) | Ø Cable range Standard seal | Ø Cable range Reducing seal | Ø Wire |
|---|---|---|---|---|---|---|---|
| | Male | Female | | | | | |
| 12 | 22.8 max | 15.1 max | 2 | 2.5 | 5.0/12.0 | 3.0/9.0 | From 1.7 mm to 3.0 mm |
| 14 | 26.7 max | 18.9 max | 3 | 2.5 | 7.0/14.0 | 5.0/12.0 | |

Note: all dimensions are in mm

# Assembly Instructions (Continued)

## UTS1GJC or UTS6GJC Assembly

- Slide accessories onto the cable (make sure to keep compression ring on the grommet)
- Strip external cable jacket
- Strip wires and crimp contacts (see pages 176 & 177)
- Insert first contact into the grommet (first contact in cavity A, no tool is required). Then insert the contact in the connector cavity A (insert manually or use tool RTM205)
- Place the grommet and compression ring on the insulator
- Insert the other contacts
- Tighten adapter with plug UTS6 or receptacle UTS1, choose right seal(waste the other seal)
- Tighten the nut to rear of either UTS1 or UTS6 (recommended torque values to be applied according to the table right).

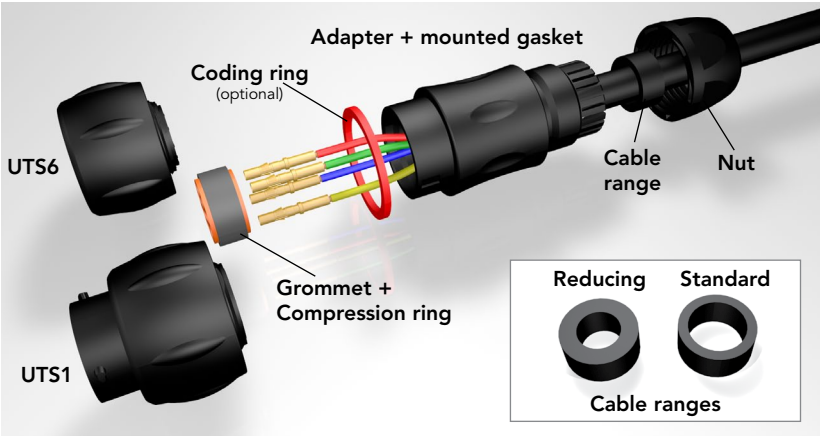


| Shell size | Recommended jacket strip length (mm) | | Adapter tightening torque (Nm) | Nut tightening torque (Nm) | Ø Cable range Standard seal | Ø Cable range Reducing seal | Ø Wire |
|---|---|---|---|---|---|---|---|
| | Male | Female | | | | | |
| 10 | 21 | 29 | 1.5 | 2 | 2.5/8.0 | 1.5/5.0 | from 1.7 mm to 3.0 mm |
| 12 | 25 | 33 | 2 | 2.5 | 5.0/12.0 | 3.0/9.0 | |
| 14 | 29 | 36 | 3 | 2.5 | 7.0/14.0 | 5.0/12.0 | |

## Mated Connector Lengths

### UTS0 + UTS6

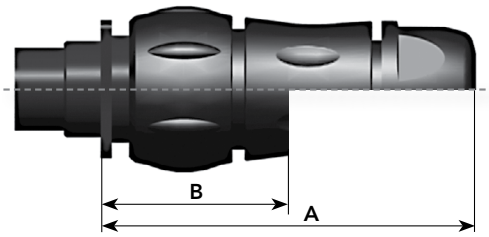


### UTS7 + UTS6

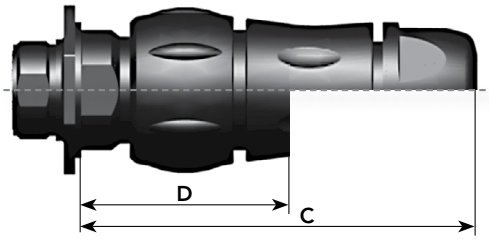


| Shell size | UTS0 + UTS6 JC & GJC | UTS0 + UTS6 GN | UTS7 + UTS6 JC & GJC | UTS7 + UTS6 GN |
|---|---|---|---|---|
| | A max | B max | C max | D max |
| 8 | 61.1 | - | 66.6 | - |
| 10 | 73.2 | 39.6 | 77.3 | 43.7 |
| 12 | 77.6 | 39.4 | 81.7 | 43.5 |
| 14 | 83.5 | 40 | 87.6 | 44.1 |
| 18 | 93.1 | - | 97.2 | - |

Note: all dimensions are in mm

# Mating Procedure

## UTS Coupling Procedure

The pictures below provide step by step instructions on how to mate a plug and receptacle connector in order to avoid damaging any of the contacts.

- Identify the primary key of each connector.

1

- Align the primary keys of the connectors.

2

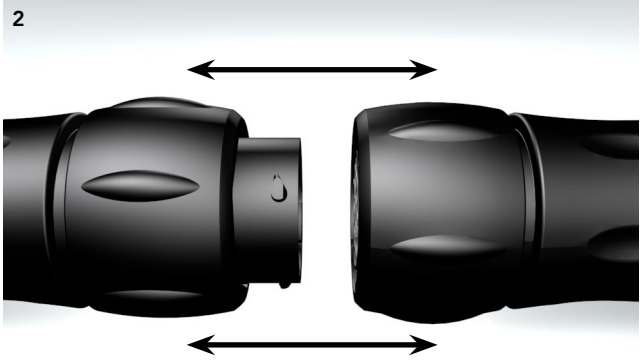

Non correct positioning:

3

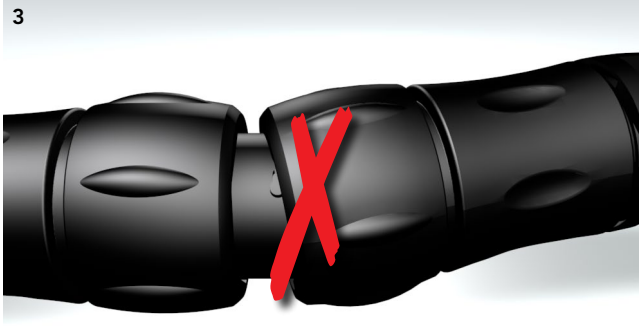

- Offer the plug to the receptacle.

4

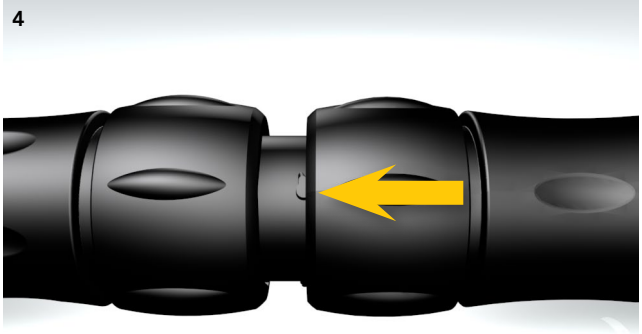

- Turn coupling ring until you hear a 'click'

5

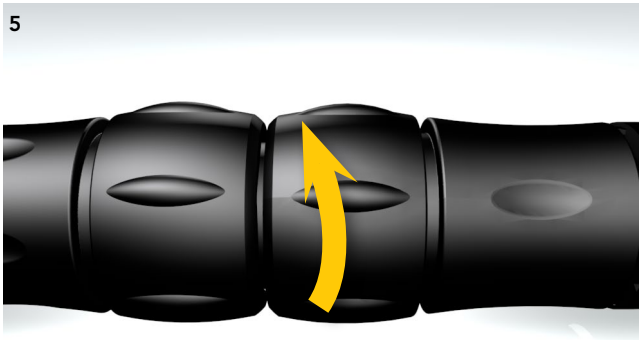

Fastening of cable: In order to avoid any mechanical stress on the connection, cable could be clamp closed to the connector in such a way there is no bending or traction applying on the connector.

6

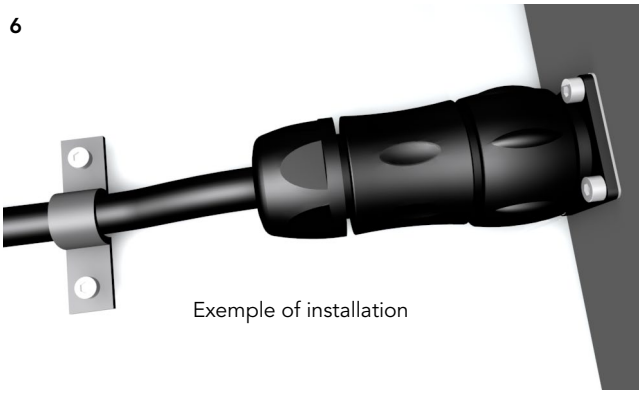

Exemple of installation

# Rated Current & Working Voltage

## Current Carrying Capacity

The current carrying capacity of a connector is limited by the thermal properties of materials used in its construction. The amount of current that can be handled depends on the size of cable used, the ambient temperature and the heat that is generated inside the connector. Part 3 of the IEC 60512 standard determines through a derating curve, the maximum current permissible, which varies from one layout to another (Fig.1 & Fig.2). Wire size plays an important role in dissipating heat and avoid overheating (Fig.1 & Fig.3).

Please note that the curve should be adjusted when dealing with potential hot spots, which can occur as a result of unequal loading of current across a number of contacts. As a general rule, it is best to avoid placing power handling contacts in the middle of the connector; try to locate them towards the edge where heat can be dissipated more effectively. Eventually you should find a level which represents the permissible operating range:

**Fig.1: UTS 12-4 – 1.5mm² wires**

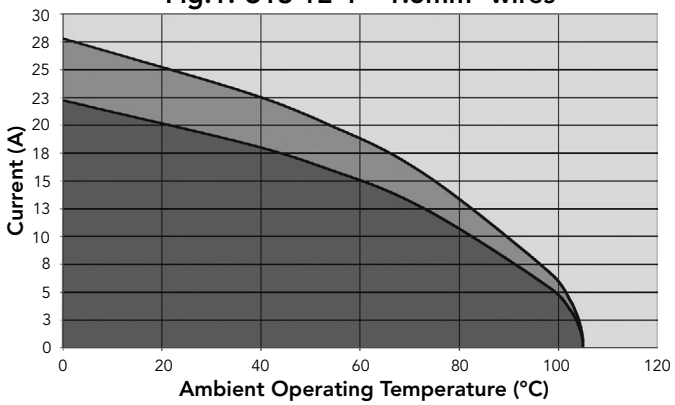


**Fig.2: UTS 12-8 – 1.5mm² wires**

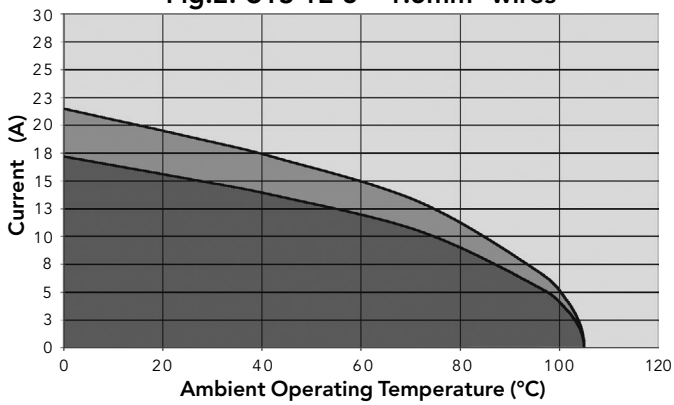


**Fig.3: UTS 12-4 – 2.5mm² wires**

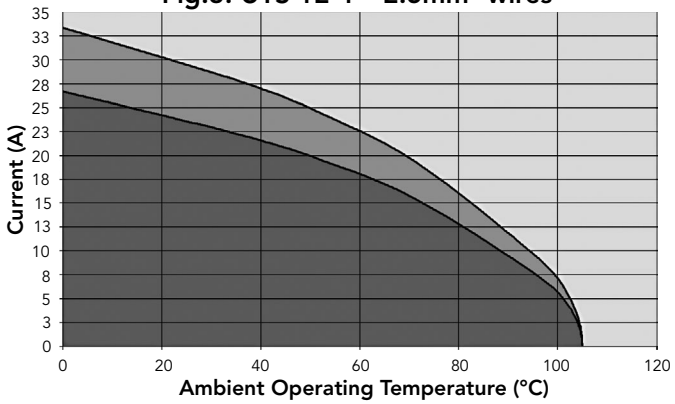


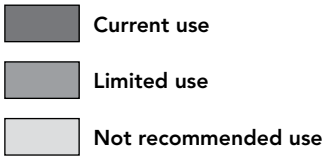


The **rated current** is defined as uninterrupted continuous current that a connector can take when all contacts are energized simultaneously without exceeding the maximum limit of temperature. The earth contact is never loaded.

# UV Resistance

## Exposure in Natural Environment

Solar radiation affects all materials, but plastics can be susceptible to extreme degradation over time.
The choice of materials for the UTS series was therefore a critical consideration.

All over the world we are not exposed to the same amount of energy given by the sun. The chart shown here clearly illustrates this.

So we performed test according to the ISO 4892-2 and simulated 5 years exposure to outdoor environments (temperature, humidity, etc...)
After this period there was no significant colour variation, no crazing, no cracking and no major variation of mechanical properties.

**Yearly mean of daily irradiation in UV (280-400 nm) on horizontal plane (J/cm²) (1990-2004)**

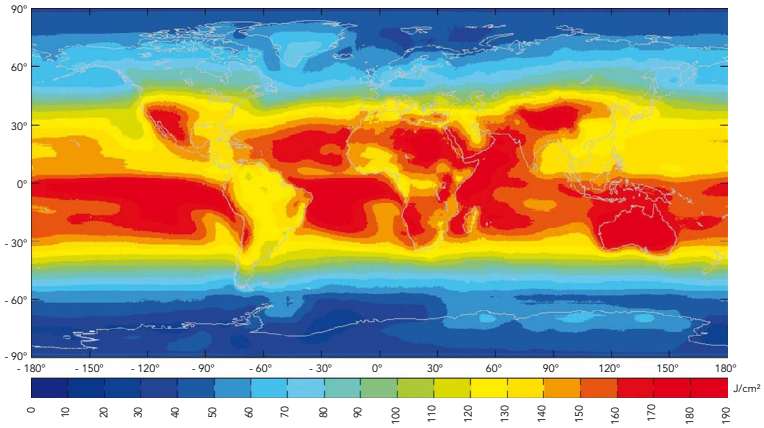

# UL94 + UL1977

## Underwriter Laboratories

### There are two main standards for industrial connectors: UL94 & UL1977

## UL94

This standard is dedicated to plastics flammability. It characterises how the material burns in various orientation and thicknesses.

The UTS series has been rated at **V-0** & **HB**.

Procedure: A specimen is supported in a vertical or horizontal position and a flame is applied to the bottom of the specimen. The flame is applied for ten seconds and then removed until flaming stops, at which time the flame is reapplied for another ten seconds and then removed. Two sets of five specimens are tested.

**V-0 Vertical burning:**

- Specimens must not burn with flaming combustion for more than 10 seconds after each test flame application
- Total flaming combustion time must not exceed 50 seconds for each set of 5 specimens
- Specimens must not burn with flaming or glowing combustion up to the specimen holding clamp
- Specimens must not drip flaming particles that ignite the cotton
- No specimen can have glowing combustion remain for longer than 30 seconds after removal of the test flame.

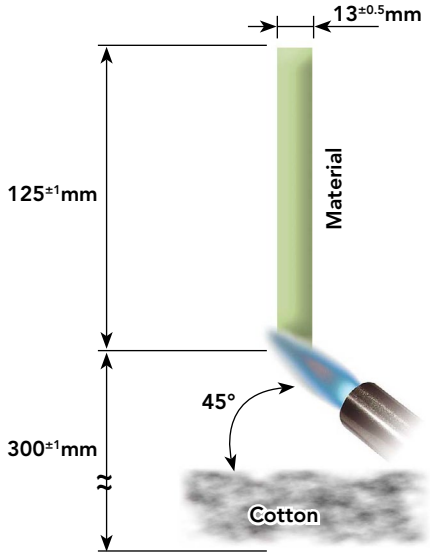


**HB Horizontal burning:**

- A material classified HB shall not have a burning rate exceeding 40 mm per minute over a 75 mm span for specimens having a thickness of 3.0 to 13 mm
- A material classified HB shall not have a burning rate exceeding 75 mm per minute over a 75 mm span for specimens having a thickness less than 3.0 mm
- A material classified HB shall cease to burn before the 100 mm reference mark.

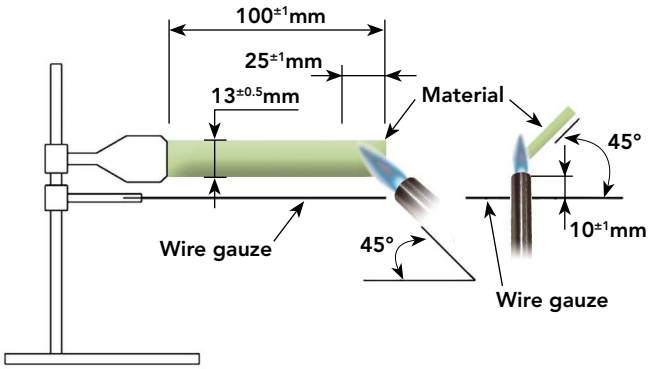

## Underwriter Laboratories

# UL1977

There are several standards which deal with plug and receptacle. Each of them is only for a small area of applications. It could be telecommunication, etc. The UL 1977 covers single and multipole connectors intended for factory assembly.

Requirements apply to devices taking into account intensity and voltage. The categories are as follows:

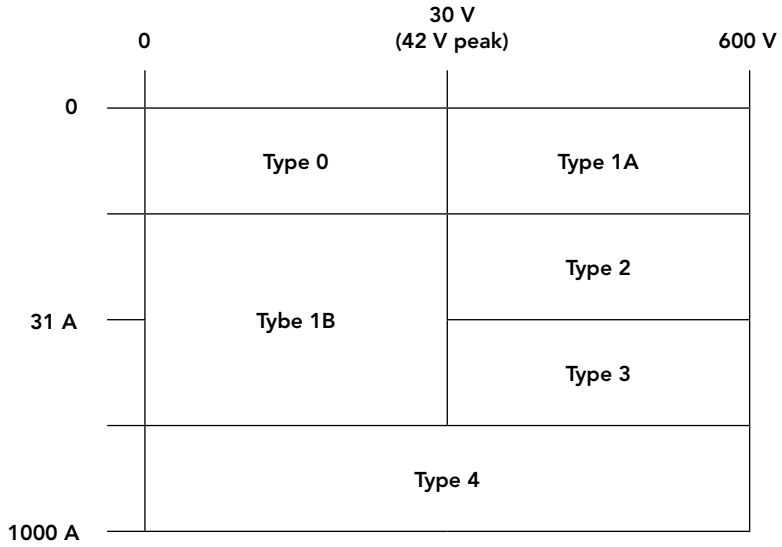


According to above table, the level of performance that has to be reached could be different. Most of them are explained in the following page.

## Insulating materials:

Material uses for electrical insulation, as a minimum, have to comply with the characteristics shown below:

**• Minimum ratings for polymeric materials**

| Type | Flame rating | Relative thermal index (RTI) Electrical/mechanical w/o impact */** |
|---|---|---|
| 0 | - | 50/50 |
| 1A | HB | 50/50 |
| 1B | HB | 50/50 |
| 2 | HB | 50/50 |
| 3 | HB | 50/50 |
| 4 | HB | 50/50 |

* The RTI of the material shall not be lower than the temperature measured during the Temperature Test.
** For a thickness less than that for which a value has been established, the RTI of the minimum thickness with an established value shall be used.

## Assembly:

Connector has to be keyed to prevent any mismating that can damage the machine or hurt the user. In the same way, plugs and sockets have to be equipped to protect persons against contact with live parts.
Finally the identified grounding contact shall be located so that the corresponding electrical continuity has to be completed before any other contact.

# UL94 + UL1977 (Continued)

## Underwriter Laboratories

## UL1977

### Spacing:

For a 250V max connector, distance through air or over material shall be 1.2mm whereas from 250V to 600V connector the spacing is 3.2mm minimum. These distances have to be taken between uninsulated live parts as shown in the matrix below:

**• Applicability of spacing requirements**

| Type | Uninsulated live part - uninsulated live part of opposite polarity | Uninsulated live part - uninsulated grounded metal part | Uninsulated live part - exposed dead metal part |
|---|---|---|---|
| 0 | No | No | No |
| 1A | Yes | Yes | Yes |
| 1B | Yes | Yes | No |
| 2 | Yes | Yes | Yes |
| 3 | Yes | Yes | Yes |
| 4 | Yes | Yes | Yes |

An alternative way to determine voltage rating is with the Dielectric-Withstand test. If during one minute there is no arc-over or breakdown the rated voltage is given as shown below:

**a)** 500 volts for a type 1B device
**b)** 1000 volts plus twice rated voltage for types 1A, 2, 3 and 4 devices.

### Marking:

A device shall be legibly marked with the manufacturer's trade name, trade mark, or other descriptive marking by which the organisation responsible for the product may be identified. (Exception: If the device is too small, or where the legibility would be difficult to attain, the manufacturer's name, trademark, or other descriptive marking may appear on the smallest unit container or carton)

The following shall be marked on the device or on the smallest unit container or carton or on a stuffer sheet in the smallest unit container or carton:

**a)** The catalog number or an equivalent designation
**b**) The electrical rating in both volts and amperes, if assigned
**c)** Whether ac or dc, if restricted
**d)** Flammability class, if identified

Example - Marking for the arrangement 10-3: **10A 500V UL94 V-0**

# IEC 61984 & IP Codes Explained

## IEC 61984

The norm is dedicated to connectors with rated voltage above 50V and up to 1000V and rated currents up to 125A per contact.
Depending on your application connectors should be compliant with another standard. This has to be double checked with the customer.

There are a lot of constructional requirements and performances specified in that standard. Most of them are illustrated in greater details hereafter.

### Provisions for earthing:

The UTS connector is intended to be used on Class I or Class III (see IEC 61140) systems. Even if the purpose of our connector is not to interrupt current, there is a need to add a protective earth contact. This one shall be a "First mate, last break" style. Critically, among all of the normal assumptions we make in designing a connector, this contact has to be considered as a live part and must be protected attached to the ground wire.

### IP Code:

IP is a coding system defined by the IEC 60529 to indicate the degrees of protection provided by an enclosure. The aim of this is to give information regarding the accessibility of live parts against ingress of water and other foreign bodies.

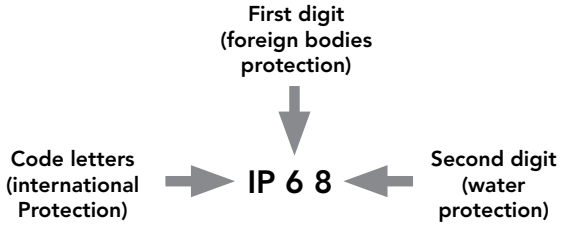


| 1st digit | Degree of protection |
|---|---|
| 0 | No protection against accidental contact.<br>No protection against solid foreign bodies. |
| 1 | Protection against contact with any large area by hand and against large solid foreign bodies with a diameter bigger than 50 mm. |
| 2 | Protection against contact with the fingers.<br>Protection against solid foreign bodies with a diameter bigger than 12 mm. |
| 3 | Protection against tools, wires or similar objects with a diameter bigger than 2.5 mm.<br>Protection against small solid bodies with a diameter bigger than 2.5 mm. |
| 4 | Same as 3 however diameter is bigger than 1 mm. |
| 5 | Full protection against contact. Protection against interior injurious dust deposits. |
| 6 | Total protection against contact.<br>Protection against penetration of dust. |

| 2nd digit | Degree of protection |
|---|---|
| 0 | No protection against water. |
| 1 | Drip-proof.<br>Protection against vertical water drips. |
| 2 | Drip-proof.<br>Protection against water drips up to a 15° angle. |
| 3 | Spray-proof.<br>Protection against diagonal water drips up to a 60° angle. |
| 4 | Splash-proof.<br>Protection against splashed water from all directions. |
| 5 | Hose-proof.<br>Protection against water (out of a nozzle) from all directions. |
| 6 | Protection against temporary flooding. |
| 7 | Protection against temporary immersions. |
| 8 | Protection against water pressure.<br>Pressure to be specified by supplier. |

UTS offers high sealing performance IP68 / 69K…
Even in dynamic situations.

In addition to the IEC 60529 we conjointly use the DIN 40050 part 9 which are dedicated to road vehicles. The main differences are:

- **First digit:** 5 replaced by 5K, 6 by 6K. In the DIN the tested equipment is not depressurized as it is in the IEC.
- **Second digit:** 5K and 6K has been added and are equivalent respectively to 5 and 6 but with higher pressure. 9K which represents the High pressure cleaning.

| | |
|---|---|
| 9K | High pressure hose-proof.<br>Protection against high pressure water (out of a nozzle) from all directions. |

IEC 61984 ed.2.0 "Copyright © 2008 IEC Geneva, Switzerland.www.iec.ch"
IEC 60664-1 ed.2.0 "Copyright © 2007 IEC Geneva, Switzerland.www.iec.ch"

# IEC 61984 & IP Codes Explained (Continued)

## IEC 61984

### Overvoltage

UTS connectors are qualified to be used on systems rated at Overvoltage category III

Per the IEC 60664-1 (formely VDE 0110) each category is linked to the end application and where the device will be implemented:

- **Category IV** (primary overcurrent protection equipment):
  Origin of the installation

- **Category III** (any fixed installation with a permanent connection)
  Fixed installation and equipment and for cases where the reliability and the availability is subject to special requirements

- **Category II** (domestic appliances):
  Energy consuming equipment to be supplied from the fixed installation

- **Category I** (protected electronic circuit):
  For connection to circuit in which measures are taken to limit transient overvoltage.

### Pollution degree

Per the IEC 60664-1 (formerly VDE 0110) the environment affects the performance of the insulation. Particles can build a bridge between two metal parts. As a rule dust mixed with water can be conductive and more generally speaking metal dust is conductive. Finally, the standard defines 4 levels of pollution:

- **Degree 1** (Air conditioned dry room):
  No pollution or only dry, non conductive pollution occurs. The pollution has no influence.

- **Degree 2** (Personal computer in a residential area):
  Only non conductive pollution occurs except that occasionally a temporary conductivity caused by condensation is to be expected.

- **Degree 3** (Machine tools):
  Conductive pollution occurs or dry non-conductive pollution occurs which becomes conductive due to condensation which is to be expected.

- **Degree 4** (Equipments on roof, locomotives):
  Continuous conductivity occurs due to conductive dust, rain or other wet conditions.

Finally, the harsher the environment is, the longer clearance and creepage distances should be. Nonetheless, according the IEC 61984, enclosure rated at IP54 or higher can be dimensioned for a lower pollution degree. This applies to mated connectors disengaged for test and maintenance.

### Marking

The marking should give enough details to the user to know what the main characteristics are and without going deep in technical documentation. Below examples identify the suitability of the connector:

- **Example 1:**
  Marking of a connector with rated current 16A, rated voltage 400V, rated impulse voltage 6kV and pollution degree 3, 2 and 1 for use in any system, preferably unearthed or delta-earthed systems:

  **16A 400V 6kV 3**

- **Example 2:**
  Marking of a connector with rated current 16A, rated insulation voltages line-to-earth 250V, line-to-line 400V, rated impulse voltage 4kV and pollution degree 3, 2 and 1 for use in earthed systems:

  **16A 250V 400V 4kV 3**

# IEC 61140 Explained

## IEC 61140

On a daily basis, we are using many electrical appliances, some are grounded, and some are not. The levels of grounding protection are clearly defined by the International Electrotechnical Commission standard IEC 61140, a standard that has an influence on our connectors and how they should be used; our customers therefore need to pay particular attention to the three categories defined within this standard to ensure compatibility with their system. Everything explained hereafter is valid for connectors not intended to interrupt current.

### Class I:

Devices which belong to this category have their chassis grounded via the ground wire (green/yellow in Europe, green in the US, Canada and Japan). A fault in the appliance might cause a live conductor to energize the casing. In this case, the current flows to the ground conductor and the circuit interrupter will cut off the power supply. In case of the UTS series, it means the envelope (coupling ring, backshell and housing) may become live, therefore, care needs to be taken to attach the connector to the ground. This is usually done via the ground conductor using a splice between the ground contact and the housing.

### Class II:

Products in this category have reinforced insulation, meaning that the casing does not need to be connected to ground. In this case, the possibility of electric shock has been removed. Most of the time, reinforced insulation means double insulation, i.e. the second layer will take over the first one in case the first one fails. The UTS series is not designed to comply with this standard, so we cannot recommend it for this product category.

Note: UL 1310 also defines a class II device, but in that case this is just to set the upper limit of use, like a wall charger for our cell phone.

### Class III:

In this category, electrical appliances are fed by a low voltage source (<48VAC or < 120VDC). In normal conditions live conductors can be accessible without any risk for the end user. No particular attention needs to be taken in regards to UTS series when it comes to a class III device.

### Conclusion:

UTS series can be used in class I and class III environments, but each category affects the product performance. Throughout the catalog, current and voltage ratings have been given for class I devices keeping in mind the ground conductor needs to be attached according to recommended wiring instructions.

Note: Special applications like recreational vehicles are not under the scope of the IEC 61140.

# What is NEMA Rating ?

• NEMA ratings vs IP ratings

Whereas IP ratings only consider protection against ingress of foreign bodies (first digit) and ingress of water (second digit), NEMA ratings consider these but also verify protection from external ice, corrosive materials, oil immersion, etc.

The correlation between NEMA & IP being limited only to dust and water, we can state that a NEMA type is equivalent to an IP rating but it is not possible to say the contrary.

Below a list of some NEMA standards:

| Enclosure rating | IP20 | IP22 | IP55 | IP64 | IP65 | IP66 | IP67 | IP68 |
|---|---|---|---|---|---|---|---|---|
| Type 1 | • | | | | | | | |
| Type 3 | | | | • | | | | |
| Type 3R | | • | | | | | | |
| Type 3S | | | | • | | | | |
| Type 4 | | | | | | • | | |
| Type 4X | | | | | | • | | |
| Type 6 | | | | | | | • | |
| Type 6P | | | | | | | | • |
| Type 12 | | | • | | | | | |
| Type 13 | | | | | • | | | |

• indicates compliance

Type 6 rating can be either Type 6 or Type 6P - please see below:

| | | |
|---|---|---|
| 6 | IP67 | Enclosures constructed for either indoor or outdoor use to provide a degree of protection to personnel against incidental contact with the enclosed equipment, falling dirt, hose-directed water, the entry of water during **occasional temporary** submersion at a limited depth and damage from external ice formation. |
| 6P | IP68 | Enclosures constructed for either indoor or outdoor use to provide a degree of protection to personnel against incidental contact with the enclosed equipment, falling dirt, hose-directed water, the entry of water **during prolonged** submersion at a limited depth and damage from external ice formation. |

# Ethernet for the Layman

In order to explain basic Ethernet theory, we can use a functional comparison to a busy city with highways, buildings and cars. To illustrate this, the table below provides correlation between the different components/pieces/links that encompass Ethernet network connectivity, and the larger scale infrastructure of a metropolitan city.

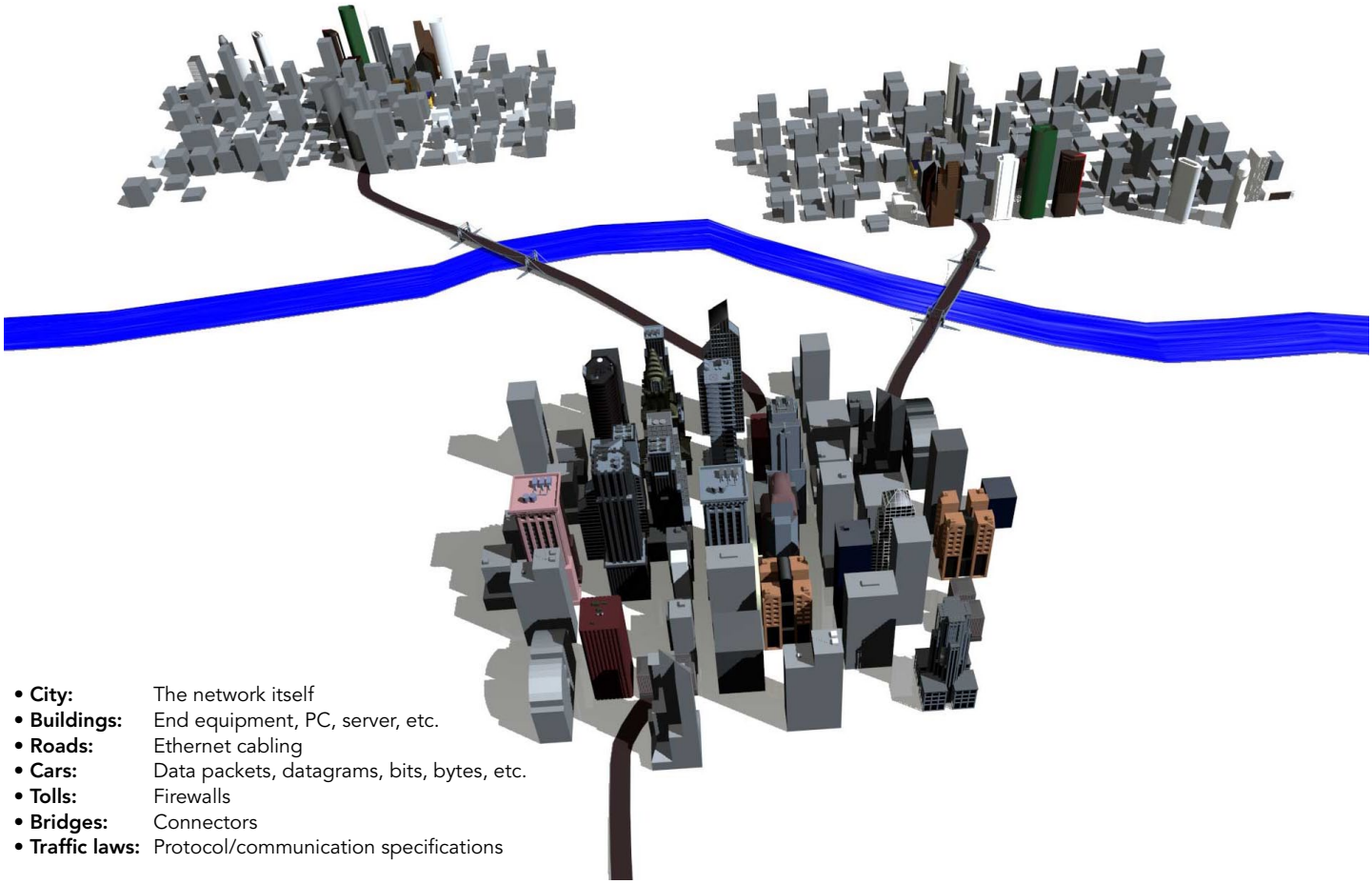

- **City:** The network itself
- **Buildings:** End equipment, PC, server, etc.
- **Roads:** Ethernet cabling
- **Cars:** Data packets, datagrams, bits, bytes, etc.
- **Tolls:** Firewalls
- **Bridges:** Connectors
- **Traffic laws:** Protocol/communication specifications

## Ethernet Basics

Ethernet is a widely used communications protocol that is used to transmit data packets (datagrams) between network devices. Imagine a highway in a large metropolitan area six lanes wide at rush hour. The vehicles on the highway need rules to follow so that they get to their destination without crashing into each other. In an Ethernet network link, there could be 100 million bits of information transmitted in one second. In the Ethernet standard, there exist rules to govern packet structure, transmission requirements, error correction, communication with end equipment, etc.

## Examining the differences between 100Mhz, 100 Base TX, Cat5e/Cat6. What does it all mean?

When discussing connectors and Ethernet, there are a few key details to be aware of:

- 100Mhz is a measurement of Frequency for the signal
  - Comparable to the Speed Limit of a highway
- 100BaseTX (or Fast Ethernet) is an Ethernet link standard and identifies available link bandwidth. The bandwidth is measured in units of MBits/S (megabits per second)
  - Comparable to the number of cars that pass a point in one second
- Cat5e/Cat6 are an EIA/TIA standard for performance and physical characteristics for cables and connectors
  - Comparable to performance specifications of the car and highway.

In connectors and cables, Fast Ethernet uses 2 pairs. One for transmit and one for receive. This way data traffic can flow in both directions simultaneously.

# Ethernet for the Layman (Continued)

## Souriau offering:

**Standard solutions.**

UTS Hi seal size 8, 4 contacts

1 (Pair 1) ➡ A
2 (Pair 1) ➡ C
3 (Pair 2) ➡ B
4 (Pair 2) ➡ D

**8E4/8D4**
4 Ø 1mm (#20)

UTS size 10, 6 contacts

1 (Pair 1) ➡ A
2 (Pair 1) ➡ B
3 (Pair 2) ➡ E
4 (Pair 2) ➡ D

**106/10E6/10D6**
6 Ø 1mm (#20)

**Shielding continuity done in cavity C&F. Note: Shielding can be replaced by DC power.**

UTS size 12, 10 contacts

1 (Pair 1) ➡ C
2 (Pair 1) ➡ B
3 (Pair 2) ➡ G
4 (Pair 2) ➡ H

**1210/12E10/12D10**
10 Ø 1mm (#20)

## What about using coax contacts ?

Ethernet twisted pairs carry a symmetrical (balanced) signal. Once terminated into a coax contact, the inner core will be protected by a shield - but not the outer contact. Because of EMI issues, the signal will no longer be balanced. Conclusion - it does not work and is not recommended.

## What about using Quadrax contacts ?

The Quadrax contact is used in railway applications because of the use of quad cable. In this specific market, the standard Ethernet twisted pairs wires cannot be offered, they are too thin and often solid (not stranded).

In the rest of industry, UTP (Unshielded Twisted Pairs) cables are widely used. The Quadrax contact is not designed to terminate them. And thus, are not advised for industrial applications.

## Conclusion

To carry 100Mb/s data signal, 100BaseTX or Fast Ethernet recommends the use of Cat5e connectors as well as Cat5e cable with the support of a 100MHz signal. Nevertheless, a 100Mb/s signal can be transmitted in certain conditions (short distance, only one connector, lower frequency but a different code) thru many other connection materials - not necessarily Cat5e rated.

UTS SERIES

© 2014 SOURIAU - SOURIAU is a registratred trademark

# Appendices


- #16 Coaxial Contacts/Cabling Notices ..... 200
- Glossary of Terms ..... 207
- Discrimination/Keying Methods ..... 208
- Part number Index ..... 209

# #16 Coaxial Contacts

## Coaxial Cable - Contact Monocrimp and Multipiece

| Cable type | Impe-dance | Contact type | Ø over jacket | | Ø over dielectric | | Inner cond size | Ø outer braid | | Male contact kit for coaxial cable | Female contact kit for coaxial cable |
|---|---|---|---|---|---|---|---|---|---|---|---|
| | | | inch | mm | inch | mm | Ext. Ø mm | inch | mm | | |
| RG161/U | 75 | Multi piece | 0.09" | 2.29 | 0.057" | 1.45 | - | - | - | RMDXK10D28 | RCDXK1D28 |
| RG179A/U | 75 | | 0.105" | 2.67 | 0.063" | 1.6 | 0.3 | 0.084" | 2.13 max | | |
| RG179B/U | 75 | | 0.105" | 2.67 | 0.063" | 1.6 | 0.3 | 0.084" | 2.13 max | | |
| RG187/U | 75 | | 0.11" | 2.79 max | 0.06" | 1.52 | 0.3 | - | - | | |
| RG188/U | 50 | | 0.11" | 2.79 max | 0.06" | 1.52 | 0.51 | 0.078" | 1.98 max | | |
| RG174/U | 50 | | 0.11" | 2.92 | 0.06" | 1.52 | 0.48 | 0.088" | 2.24 max | | |
| AMPHENOL 21-598 | 50 | | 0.105" | 2.67 | 0.06" | 1.52 | 0.48 | - | - | | |
| RG196/U | 50 | | 0.08" | 2.03 max | 0.034" | 0.086 | 0.3 | - | -- | | |
| RG178A/U | 50 | | 0.075" | 1.91 | 0.034" | 0.86 | 0.3 | 0.054" | 1.37 max | | |
| RG/188A/U | 50 | Mono crimp | 0.110" | 2.79 | 0.06" | 1.52 | 0.51 | 0.078" | 1.98 max | RMDX6036D28 | RCDX6036D28 |
| KX21TVT (europe) RG178 B/U | 50 | | 0.075" | 1.91 | 0.034" | 0.86 | 0.3 | 0.054" | 1.37 max | RMDX6034D28 | RCDX6034D28 |
| RG178 / BU | 50 | | 0.075" | 1.91 | 0.034" | 0.86 | 0.3 | 0.054" | 1.37 max | RMDX6050D28 | RCDX6016D28 |
| RG174/U | 50 | | 0.115" | 2.92 | 0.06" | 1.52 | 0.48 | 0.088" | 2.24 max | RMDX6032D28 | RCDX6032D28 |
| RG188A/U | 50 | | 0.11" | 2.79 | 0.06" | 1.52 | 0.51 | 0.078" | 1.98 max | RMDX6036D28 | RCDX6036D28 |
| RG316/U | 50 | | 0.107" | 2.72 | 0.06" | 1.52 | 0.51 | 0.078" | 2.05 max | RMDX6036D28 | RCDX6036D28 |
| raychem 5024A3111 | 50 | | 0.12" | 3.05 | 0.083" | 2.11 | 0.64 | 0.097" | 2.46 | RMDX6052D28 | RCDX6052D28 |
| raychem 5026e1614 | 50 | | 0.083" | 2.11 | 0.05" | 1.27 | 0.48 | 0.067" | 1.7 | RMDX6036D28 | RCDX6036D28 |
| surprenant pn 8134 | - | Multi piece | 0.1" | 2.54 | 0.058" | 1.47 | 0.3 | - | - | RMDXK10D28 | RCDXK1D28 |
| PRD PN 247AS-C1123-001 | - | Mono crimp | 0.103" | 2.62 | 0.06" | 1.52 | 0.51 | 0.078" | 1.98 | RMDX6018D28 | RCDX6018D28 |
| PRD PN 247AS-C1251 | - | | 0.092" | 2.34 | 0.05" | 1.27 | 0.64 | 0.067" | 1.7 | RMDX6018D28 | RCDX6018D28 |
| JUDD C15013010902 | - | | 0.087" | 2.13 | 0.05" | 1.27 | 0.48 | 0.066" | 1.67 | RMDX6036D28 | RCDX6036D28 |
| CDC PIN22939200 | - | | 0.09" | 2.29 | 0.048" | 1.22 | 0.3 | 0.064" | 1.63 | RMDX6046D28 | RCDX6016D28 |
| CDC PIN22939200 | - | | 0.09" | 2.29 | 0.048" | 1.22 | 0.3 | 0.064" | 1.63 | RMDX6050D28 | RCDX6016D28 |
| CDC PIN245670000 | - | | 0.104" | 2.64 | 0.067" | 1.7 | 0.3 | 0.083" | 2.11 | RMDX6050D28 | RCDX6016D28 |
| ampex | - | | 0.114" | 2.9 | 0.075" | 1.91 | 0.38 | 0.09" | 1.29 | RMDX6032D28 | RCDX6032D28 |
| TI PN 920580 | - | | 0.7" | 1.78 | 0.038" | 0.96 | 0.48 | 0.054v | 1.37 | RMDX6024D28 | RCDX6024D28 |
| Honeywell PN 58000062 | - | | 0.12" | 3.05 | 0.077" | 1.96 | 0.41 solid | 0.096" | 2.44 | RMDX6026D28 | RCDX6026D28 |
| - | - | | 0.104" | 2.64 | 0.067" | 1.7 | 0.3 | - | 2.11 | RMDX6050D28 | - |
| - | - | | 0.09" | 2.29 | 0.048" | 1.22 | 0.3 | - | 1.63 | RMDX6050D28 | - |
| - | - | | 0.114" | 2.9 | 0.075" | 1.91 | 0.38 | - | 1.29 | RMDX6032D28 | RCDX6032D28 |
| - | - | | 0.07" | 1.78 | 0.038" | 0.96 | 0.48 | - | 1.37 | RMDX6024D28 | RCDX6024D28 |
| - | - | | 0.12" | 3.05 | 0.077" | 1.96 | 0.41 | - | 2.44 | RMDX6026D28 | RCDX6026D28 |

## Twisted Cable - Contact Monocrimp and Multipiece

| Cable type | Contact type | Inner AWG cond | Ø over jacket (single wire) | | Inner cond size | | Ø outer braid | | Male contact kit for coaxial cable | Female contact kit for coaxial cable |
|---|---|---|---|---|---|---|---|---|---|---|
| | | | inch | mm | Stranded definition | Ext. Ø mm | inch | mm | | |
| 2#24 stranded MIL-W-16878 type B | Multi piece | 24 | 0.049" | 1.24 max | 7/.008 | - | - | - | RMDXK10D28 | RCDXK1D28 |
| 2 #24 solid MIL-W-76 type LW | | 24 | 0.047" | 1.12 max | 1/.0201 | - | - | - | RMDXK10D28 | RCDXK1D28 |
| 2 #26 stranded MIL-W-76 type LW or MIL-W-16878 type B&E | | 26 | 0.043" | 1.09 max | 7/.0063 | 0.16 | - | - | RMDXK10D28 | RCDXK1D28 |
| 2 #28 solid MIL-W-81822/3 | | 28 | 0.028" | 0.71 max | - | - | - | - | RMDXK10D28 | RCDXK1D28 |
| Twisted pair 1/.201 solid MIL-W-76 type LW or MIL-W-16878 | | 26 | 0.044" | 1.12 max | 1/.0201 | 0.511 | - | - | RMDXK10D28 | RCDXK1D28 |
| Twisted pair solid MIL-W-81822/3 | | 28 | 0.028" | 0.71 max | 1/.0126 | 0.32 | - | - | RMDXK10D28 | RCDXK1D28 |
| #28 7/.0036 per Hitachi spec ec-711 (13-2820) | Mono crimp | - | 0.046" | 1.17 | 7/.0036 | - | - | - | RMDX6031D28 + YORX090 | RCDX6031D28 + YORX090 |
| 20218201 | | - | 0.028" | 0.71 | - | - | - | - | RMDX6031D28 + YORX090 | RCDX6031D28 + YORX090 |
| #30 solid | | - | 0.025" | 0.64 | - | - | - | - | RMDX6015D28 + YORX090 | RCDX6015D28 + YORX090 |
| #26 7/.0063 | | 26 | 0.028" | 0.71 | 7/.063 | 0.16 | - | - | RMDX6031D28 + YORX090 | RCDX6031D28 + YORX090 |
| #26 19/.004 | | 26 | 0.049" | 1.24 | 19/.004 | - | - | - | RMDX6019D28 + YORX090 | RCDX6019D28 + YORX090 |
| #24 7/.008 | | 24 | 0.049" | 1.24 | 7/.008 | - | - | - | RMDX6019D28 + YORX090 | RCDX6019D28 + YORX090 |
| #24 19/.005 | | 24 | 0.057" | 1.45 | 19/.005 | - | - | - | RMDX6019D28 + YORX090 | RCDX6019D28 + YORX090 |
| - | | 26 | - | 1.25 | - | - | - | 19x0.1 | RMDX6019D28 + YORX090 | RCDX6019D28 + YORX090 |
| - | | 24 | - | 1.25 | - | - | - | 7x0.2 | RMDX6019D28 + YORX090 | RCDX6019D28 + YORX090 |
| - | | 24 | - | 1.45 | - | - | - | 19x0.13 | RMDX6019D28 + YORX090 | RCDX6019D28 + YORX090 |
| - | | 26 | - | 0.7 | - | - | - | 7x0.16 | RMDX6031D28 + YORX090 | RCDX6031D28 + YORX090 |

# #16 Coaxial Contacts (Continued)

## Twisted Pair Cable Multipiece Contact Cabling

| Cable reference | Contact type | Male contact | Female contact | Crimp tool | Die set | Stop bushing | Cable strip length | | | Inner conductor crimp | | Braid crimp | |
|---|---|---|---|---|---|---|---|---|---|---|---|---|---|
| | | | | | | | A | B | C | g dim | t dim | g dim | t dim |
| 2#24 stranded mil w 16878 type B | Multi piece | RMDXK10D28 | RCDXK1D28 | M10S1J | - | - | See assembly notice | | | | | | |
| 2 #24 solid mil-w-76 type LW | | | | | | | | | | | | | |
| 2 #26 stranded mil w 76 type LW or mil w16878 type B & E | | | | | | | | | | | | | |
| 2 #28 solid mil-w-81822/3 | | | | | | | | | | | | | |
| twisted pair 1/.201 solid mil w 76 type LW or mil w 16878 | | | | | | | | | | | | | |
| twisted pair solid mil w 81822/3 | | | | | | | | | | | | | |

### Female contact

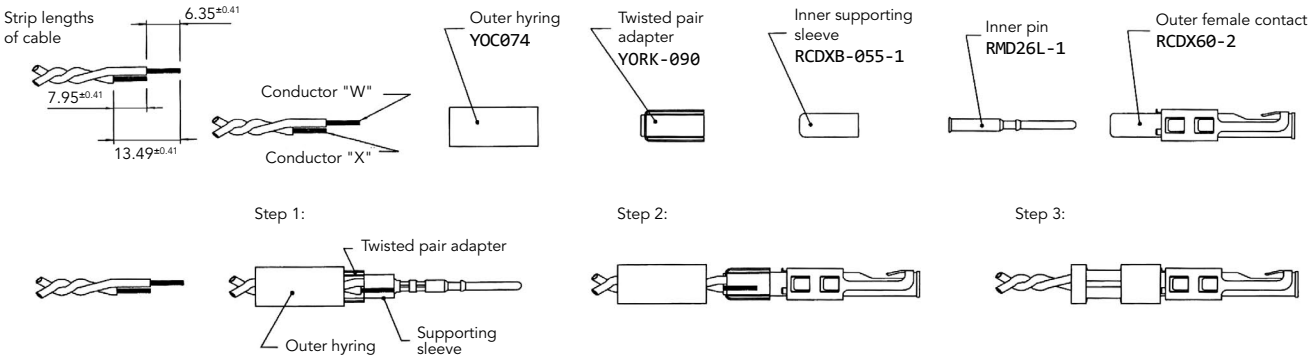


### Male contact

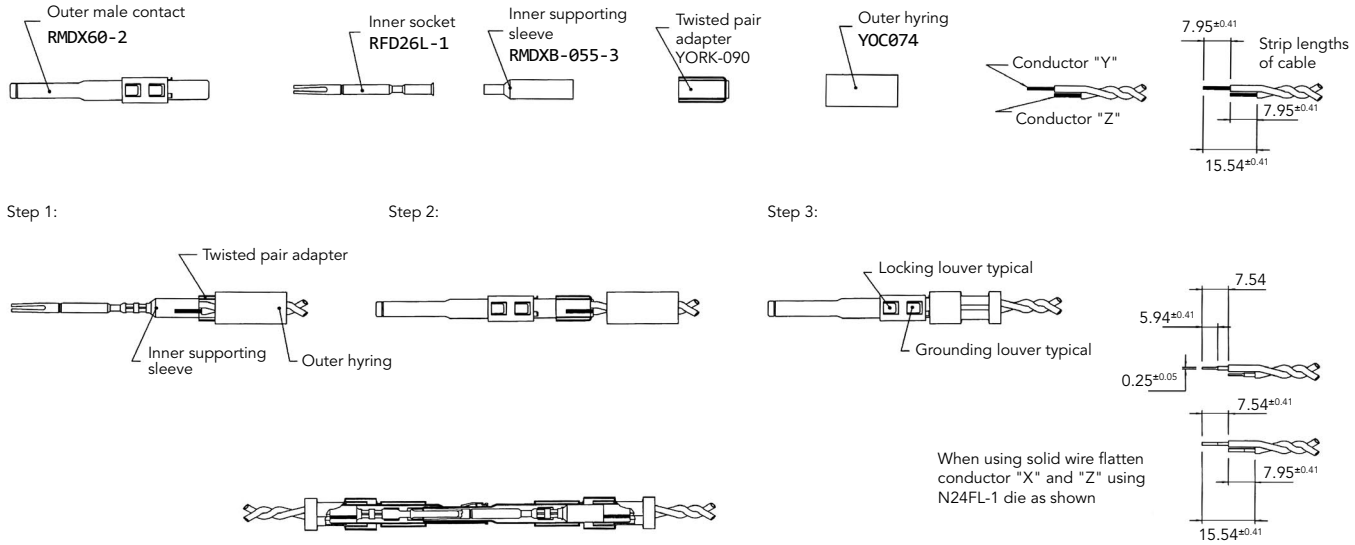


Note : all dimensions are in mm

## Twisted Pair Cable Monocrimp Contact Cabling

| Cable reference | Contact type | Male contact | Female contact | Crimp tool | Die set | Stop bushing | Cable strip length | | | Inner conductor crimp | | Braid crimp | |
|---|---|---|---|---|---|---|---|---|---|---|---|---|---|
| | | | | | | | A | B | C | g dim | t dim | g dim | t dim |
| #28 7/.0036 per Hitachi spec ec-711 (13-2820) | Mono crimp | RMDX6031D28 + YORX090 | RCDX6031D28 + YORX090 | M10S1J | S80 | SL105 | 4.7 | 6.1 | 4.32 | 1.30 to 1.12 | 1.4 to 1.22 | 2.97 to 2.84 | 3.07 to 2.9 |
| 20218204 | | | | | S80 | SL105 | 3.94 | 6.1 | 3.16 | 1.30 to 1.17 | 1.4 to 1.22 | 2.97 to 2.84 | 3.07 to 2.79 |
| #30 solid | | | | | S83 | SL105 | 4.7 | 6.1 | 4.06 | 1.22 to 1.12 | 1.35 to 1.22 | 2.97 to 2.84 | 3.12 to 2.95 |
| #26 7/.0063 | | | | | S80 | SL105 | 4.7 | 6.1 | 4.06 | 1.30 to 1.17 | 1.4 to 1.22 | 2.97 to 2.84 | 3.07 to 2.9 |
| #26 19/.004 | | | | | M10SG8 ASSY'Y TOOL DIE SET STOP BUSHING M10S1J TOOL | | 4.7 | 6.1 | 4.06 | 1.22 to 1.17 | 1.35 to 1.22 | 2.84 to 2.79 | 3.12 to 2.97 |
| #24 7/.008 | | | | | | | 4.7 | 6.1 | 4.06 | 1.22 to 1.17 | 1.35 to 1.22 | 2.84 to 2.79 | 3.12 to 2.97 |
| #24 19/.005 | | | | | | | 4.7 | 6.1 | 4.06 | 1.22 to 1.17 | 1.35 to 1.22 | 2.84 to 2.79 | 3.12 to 2.97 |
| AWG26 (19x0.1) | | | | | M10SG8 crimping kit | | 4.7 | 6 | 4 | | | | |
| AWG24 (7x0.2) | | | | | | | | | | | | | |
| AWG24 (19x0.13) | | | | | | | | | | | | | |
| AWG26 (7x0.16) | | | | | S80 | SL105 | | | | | | | |

- Select appropriate monocrimp coax twisted pair contact and cable combination.
- Select appropriate crimp tooling (hand tool, S-die set, stop bushing).
- Strip the twisted pair cable to the designated wire strip lengths.
- Insert the stripped cable into the contact. One cable is to be inserted into the inside diameter of hyring, and pushed forward into the inner contact. The second cable is to be inserted between the outside diameter of hyring and the inside diameter of the outer contact body.
- Crimp the contact.

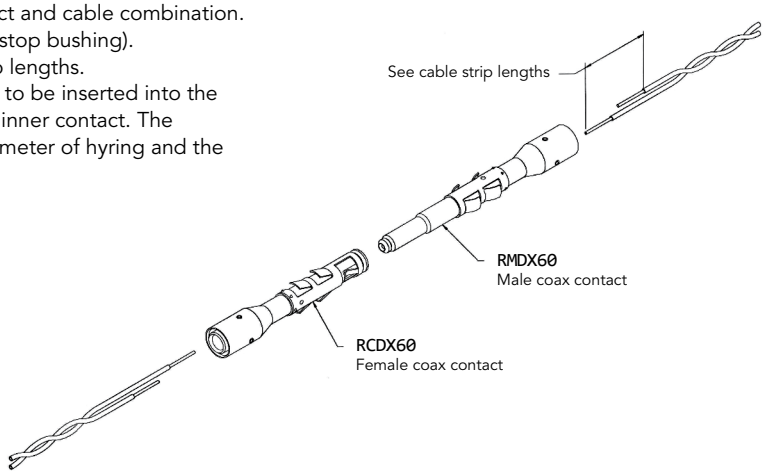


**Cable strip length**

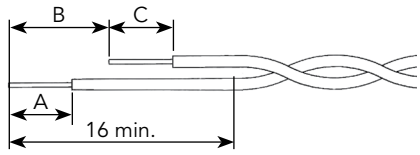


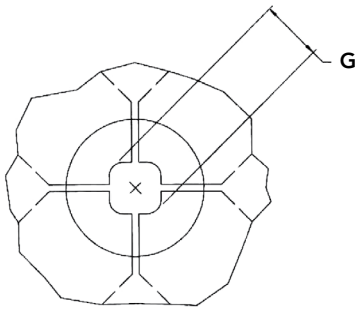


Braid crimp (G) to be measured with die set fully closed

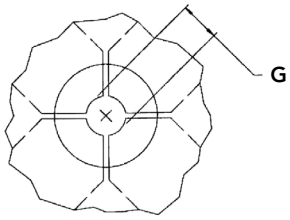


Inner conductor crimp (G) to be measured with die set fully closed

Note : all dimensions are in mm

# #16 Coaxial Contacts (Continued)

## Multipiece Male Contact with Coax Cable

| Cable reference | Contact | Hyring complementary compoments | Outer contact crimp tool | | Inner contact crimp tool | | Cable strip length | | |
|---|---|---|---|---|---|---|---|---|---|
| | | | Crimp tool M10S1J | | Crimp tool M10S1J | | | | |
| | | | Die set | Stop bushing | Die set | Stop bushing | A | B | C |
| RG161U | Male: RMDXK10D28 | YOC074 | S221 | SL471 | S23D2 | SL46D2 | 4.37 | 7.95 | 15.88 |
| RG179 | | | | | | | 4.37 | 7.95 | 15.88 |
| RG187U | | | | | | | 4.37 | 7.95 | 15.88 |
| RG188/U | | | | | S26D2 | | 4.37 | 7.95 | 15.88 |
| RG174/U | | | | | | | 4.37 | 7.95 | 15.88 |
| RG178A/U | | YOC074 + RMDXB0553 | | | S23D2 | | 7.54 | 9.12 | 17.53 |
| RG196U | | | | | | | 7.54 | 9.12 | 17.53 |
| AMPHENOL 21-598 | | YOC074 | | | - | | 4.37 | 7.95 | 15.88 |
| surprenant pn 8134 | | | | | - | | 4.37 | 7.95 | 15.88 |

**Multipiece kit details**

| | | |
|---|---|---|
| RMDXK10D28 includes | RMDX602D28 | Outer contact |
| | RFD26L1D28 | Inner contact |
| | YOC074 | Outer hyring |
| | RMDXB0553 | Inner supporting sleeve |

**Cable strip length**

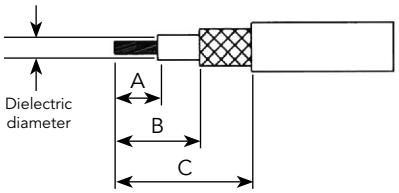


### Contact assembly with dielectric diameter over 1.4mm - without inner supporting sleeve

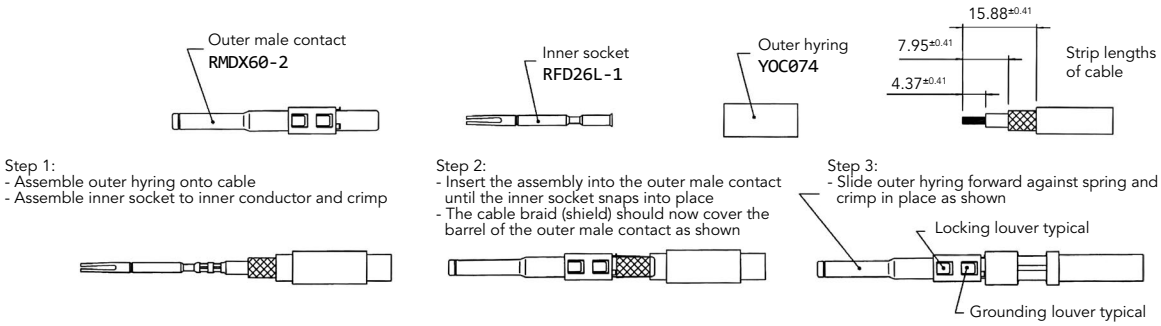


### Contact assembly with dielectric diameter under 1.4mm - with inner supporting sleeve

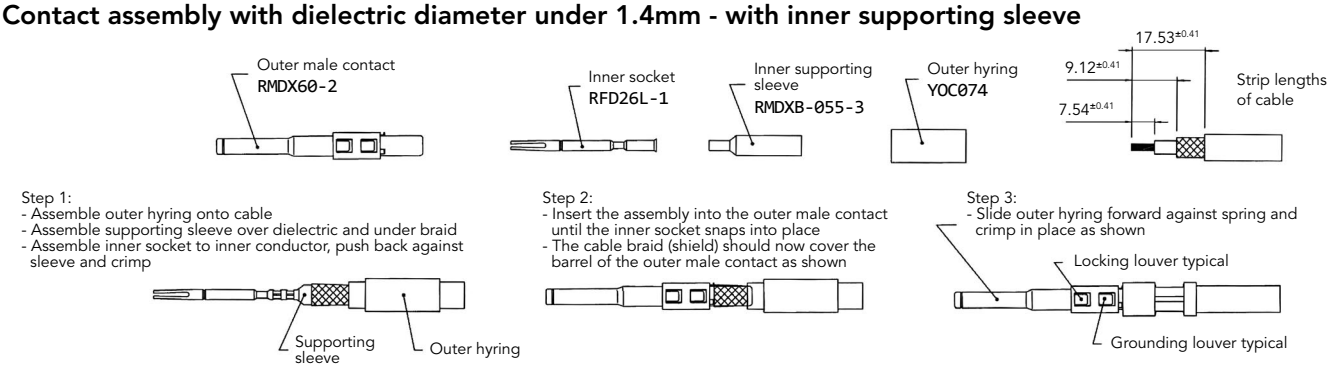


Note : all dimensions are in mm

## Multipiece Female Contact with Coax Cable

| Cable reference | Contact | Hyring complementary compoments | Outer contact crimp tool | | Inner contact crimp tool | | Cable strip length | | |
|---|---|---|---|---|---|---|---|---|---|
| | | | Crimp tool M10S1J | | Crimp tool M10S1J | | | | |
| | | | Die set | Stop bushing | Die set | Stop bushing | A | B | C |
| RG161U | Female: RCDXK1D28 | YOC074 | S221 | SL471 | S23D2 | SL46D2 | 4.37 | - | 11.13 |
| RG179 | | | | | | | 4.37 | | 11.13 |
| RG187U | | | | | | | 4.37 | | 11.13 |
| RG188/U | | | | | S26D2 | | 4.37 | | 11.13 |
| RG174/U | | | | | | | 4.37 | | 11.13 |
| RG178A/U | | YOC074 + RMDXB0553 | | | S23D2 | | 6.35 | | 11.13 |
| RG196U | | | | | | | 6.35 | | 11.13 |
| AMPHENOL 21-598 | | YOC074 | | | - | | 4.37 | | 11.13 |
| surprenant pn 8134 | | | | | - | | 4.37 | | 11.13 |

**Multipiece kit details**

| | | |
|---|---|---|
| RCDXK1D28 includes | RCDX602D28 | Outer contact |
| | RMD26L1D28 | Inner contact |
| | YOC074 | Outer hyring |
| | RCDXB0553 | Inner supporting sleeve |

**Cable strip length**

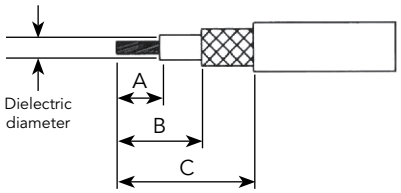


### Contact assembly with dielectric diameter over 1.4mm - without inner supporting sleeve

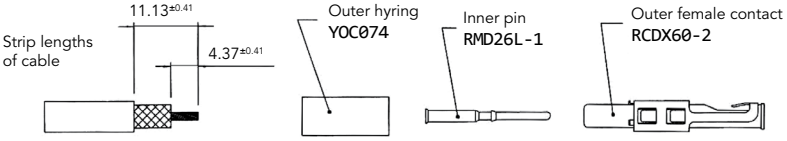


Step 1:
- Assemble outer hyring onto cable
- Assemble inner pin to inner conductor and crimp

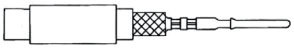

Step 2:
- Insert the assembly into the outer female contact until the inner pin snaps into place
- The cable braid (shield) should now cover the barrel of the outer female contact as shown

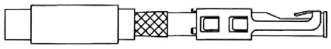

Step 3:
- Slide outer hyring forward against spring and crimp in place as shown

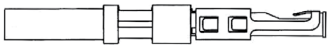

### Contact assembly with dielectric diameter under 1.4mm - with inner supporting sleeve

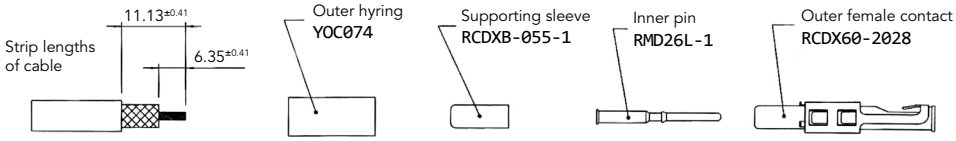


Step 1:
- Assemble outer hyring onto cable
- Assemble supporting sleeve over dielectric and under braid
- Assemble inner pin to inner conductor, push back against sleeve and crimp

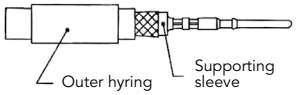


Step 2:
- Insert the assembly into the outer female contact until the inner pin snaps into place
- The cable braid (shield) should now cover the barrel of the outer female contact as shown

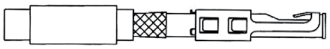

Step 3:
- Slide outer hyring forward against spring and crimp in place as shown

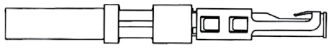

Note : all dimensions are in mm

# #16 Coaxial Contacts (Continued)

## Coax Cable with Monocrimp Contact Cabling

| Cable reference | Male contact | Female contact | Crimp tool | Die set | Stop bushing | Cable strip length | | | Inner conductor crimp | | Braid crimp | |
|---|---|---|---|---|---|---|---|---|---|---|---|---|
| | | | | | | A | B | C | g dim | t dim | g dim | t dim |
| CDC PIN22939200 | RMDX6046D28 | RCDX6016D28 | M10S1J | S80 | SL105 | 4.19 | 5.97 | 8.51 | 1.30/1.17 | 1.40/1.22 | 2.77/2.64 | 3.02/2.84 |
| CDC PIN22939200 | RMDX6046D28 | RCDX6016D28 | | S87 | SL105 | 5.08 | 6.35 | 8.89 | 1.30/1.17 | 1.40/1.22 | 2.77/2.64 | 3.02/2.84 |
| CDC PIN245670000 | RMDX6050D28 | RCDX6016D28 | | S80 | SL105 | 5.08 | 6.35 | 8.89 | 1.30/1.17 | 1.40/1.22 | 2.97/2.84 | 3.12/2.95 |
| KX21TVT (europe) RG178 B/U | RMDX6034D28 | RCDX6034D28 | | S82 | SL105 | 5.08 | 6.35 | 8.89 | 1.30/1.17 | 1.32/1.17 | 2.84/2.74 | 3.07/2.9 |
| RG178 / BU | RMDX6050D28 | RCDX6016D28 | | S87 | SL105 | 5.08 | 6.35 | 8.89 | 1.30/1.17 | 1.40/1.22 | 2.77/2.64 | 3.02/2.84 |
| ampex | RMDX6032D28 | RCDX6032D28 | | S80 | SL105 | 5.08 | 6.35 | 11.68 | 1.30/1.17 | 1.40/1.22 | 2.97/2.84 | 3.12/2.95 |
| TI PN 920580 | RMDX6024D28 | RCDX6024D28 | | S82 | SL105 | 5.08 | 6.35 | 8.89 | 1.35/1.19 | 1.42/1.27 | 2.87/2.74 | 3.07/2.9 |
| RG174/U | RMDX6032D28 | RCDX6032D28 | | S80 | SL105 | 5.08 | 6.35 | 11.68 | 1.30/1.17 | 1.40/1.22 | 2.97/2.84 | 3.12/2.95 |
| Honeywell PN 58000062 | RMDX6026D28 | RCDX6026D28 | | S82 | SL105 | 5.08 | 6.35 | 8.89 | 1.35/1.19 | 1.42/1.27 | 2.87/2.74 | 3.07/2.9 |
| RG188A/U | RMDX6036D28 | RCDX6036D28 | | S80 | SL105 | 5.08 | 6.35 | 11.68 | 1.30/1.17 | 1.40/1.22 | 2.97/2.84 | 3.12/2.95 |
| RG316/U | RMDX6036D28 | RCDX6036D28 | | S80 | SL105 | 5.08 | 6.35 | 11.68 | 1.30/1.17 | 1.40/1.22 | 2.97/2.84 | 3.12/2.95 |
| PRD PN 247AS-C1123-001 | RMDX6018D28 | RCDX6018D28 | | M10SG8 ASSY'Y TOOL DIE SET STOP BUSHING M10S1J TOOL | | 5.08 | 6.35 | 8.89 | 1.22/1.17 | 1.35/1.22 | 2.92/2.79 | 3.12/2.97 |
| PRD PN 247AS-C1251 | RMDX6018D28 | RCDX6018D28 | | | | 5.08 | 6.35 | 8.89 | 1.22/1.17 | 1.35/1.22 | 2.92/2.79 | 3.12/2.97 |
| raychem 5024A3111 | RMDX6052D28 | RCDX6052D28 | | S88 | SL105 | 5.08 | 6.35 | 11.68 | 1.37/1.27 | 1.45/1.32 | 2.92/2.79 | |
| raychem 5026e1614 | RMDX6036D28 | RCDX6036D28 | | M10SG8 ASSY'Y TOOL DIE SET STOP BUSHING M10S1J TOOL | | 5.08 | 6.35 | 8.89 | 1.22/1.17 | 1.35/1.22 | 2.92/2.79 | 3.12/2.97 |
| JUDD C15013010902 | RMDX6036D28 | RCDX6036D28 | | | | 5.08 | 6.35 | 8.89 | 1.22/1.17 | 1.35/1.22 | 2.92/2.79 | 3.12/2.97 |
| inner cond. #30, braid diam 2.64 | RMDX6050D28 | - | | S80 | SL105 | 5.1 | 6.35 | 8.9 | - | - | - | - |
| inner cond. #30, braid diam 2.29 | RMDX6050D28 | - | | S87 | SL105 | 4.2 | 6.35 | 8.5 | - | - | - | - |
| inner cond. #28, braid diam 2.9 | RMDX6032D28 | RCDX6032D28 | | S80 | SL105 | 5.1 | 6.35 | 11.7 | - | - | - | - |
| inner cond. #26, braid diam 1.78 | RMDX6024D28 | RCDX6024D28 | | S82 | SL105 | 5.1 | 6.35 | 8.9 | - | - | - | - |
| inner cond. #26, braid diam 3.05 | RMDX6026D28 | RCDX6026D28 | | S82 | SL105 | 5.1 | 6.35 | 8.9 | - | - | - | - |

- Select appropriate cable and contact combination.
- Select appropriate crimp tooling (hand tool, S-die set, stop bushing).
- Strip coax cable to the designated wire strip lengths.
- Insert the stripped coax into the rear of the contact.
- Crimp the contact.

**Cable strip length**

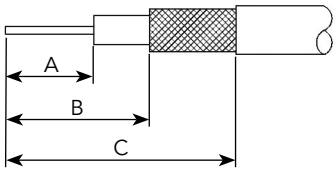


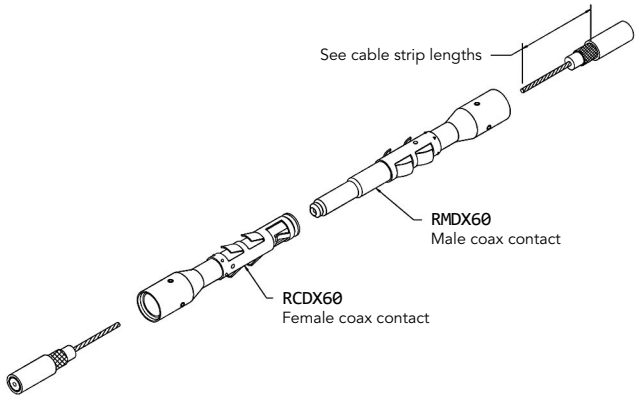


Note : all dimensions are in mm

# Glossary of Terms

**• Clearance**
Per the IEC 60664-1 it is the shortest distance between two conductive parts even over the air.

**• Creepage distance**
Per the IEC 60664-1 it represents the shortest distance along the surface of the insulating material between two conductive parts.

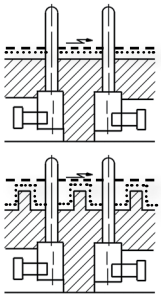

Air gap
Creepage distance

**• Working voltage**
Per the IEC 60664-1 it is the highest r.m.s. value of A.C. or D.C. voltage across any particular insulation which can occur when the equipment is supplied at rated voltage.

**• Rated impulse voltage**
Impulse withstands voltage value assigned by the manufacturer to the equipment or to a part of it characterizing the specified withstand capability of its insulation against transient overvoltage.

**• Working current**
It is the maximum continuous and not interrupted current able to be carried by all contacts without exceeding the maximum temperature of the insulating material.

**• Transient voltage**
Extract from the IEC 60664-1: Short duration overvoltage of a few millisecond or less, oscillatory or non-oscillatory, usually highly damped.

**• CTI (Comparative Tracking Index)**
The CTI value is commonly used to characterise the electrical breakdown properties of an insulating material. It allows users to know the tendency to create creepage paths. This value represents the maximum voltage after 50 drops of ammonium chloride solution without any breakdown.

**• RTI (Relative temperature Index):**
Extract from ULs website:
Maximum service temperature for a material, where a class of critical property will not be unacceptably compromised through chemical thermal degradation, over the reasonable life of an electrical product, relative to a reference material having a confirmed, acceptable corresponding performance defined RTI.

- **RTI Elec**: Electrical RTI, associated with critical electrical insulating properties.

- **RTI Mech Imp**: Mechanical Impact RTI, associated with critical impact resistance, resilience and flexibility properties.

- **RTI Mech Str:** Mechanical Strength (Mechanical without Impact) RTI, associated with critical mechanical strength where impact resistance, resilience and flexibility are not essential.

# Discrimination/Keying Methods

In applications where similar connectors are used next to each other, mismatching can cause disturbances, system failure or even danger to operating personnel.

To eliminate mismatching, some Trim Trio® connectors are offered with discrimination keys to avoid interconnection system errors. In addition, the connector insert can also be rotated inside the shell to create custom keying options.

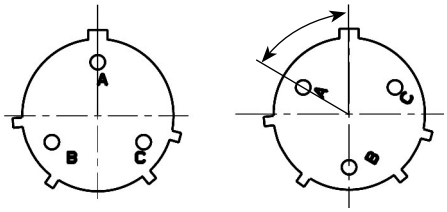


N (Normal) Other keys

Note: Insert rotated in body
(viewed from front face of male insert)

Connectors with rotated inserts can be ordered by adding the suffix W, X, Y or Z to the standard part number.

e.g. **`UTS6JC104S`** (N key) ➔ **`UTS6JC104SW`** (W key)

Consult us for overmoulded harnesses.

| Shell size | Layout | Discrimination keys degrees | | | |
|---|---|---|---|---|---|
| | | W | X | Y | Z |
| 8 | 8E2/8D2 | 58° | 122° | - | - |
| | 8E3/8D3<br>8E3A/ 8D3A<br>8E98/8D98 | 60° | 210° | - | - |
| | 8E4/8D4 | 45° | - | - | - |
| | 8E33/8D33 | 90° | - | - | - |
| 10 | 102W2/103 | - | - | - | - |
| | 104 | 45° | - | - | - |
| | 103W3 | - | - | - | - |
| | 106<br>10E6/10D6 | 90° | - | - | - |
| | 10E7/10D7 | 90° | | - | - |
| | 10E98/<br>10D98 | 90° | 180° | 240° | 270° |
| 12 | 12E2/12D2 | - | - | - | - |
| | 12E3/12D3 | - | - | 180° | - |
| | 124<br>12E4/12D4 | - | - | - | - |
| | 128 | 26° | - | - | - |
| | 12E8/12D8 | 90° | 112° | 203° | 292° |
| | 1210<br>12E10/12D10 | 60° | 155° | 270° | 295° |
| | 12E14/12D14 | 45° | - | - | - |
| 14 | 14E5/14D5 | 40° | 92° | 184° | 273° |
| | 142G1 | - | - | - | - |
| | 147<br>14E7/14D7 | - | - | - | - |
| | 148 | - | - | - | - |
| | 1412 | 60° | - | - | - |
| | 1492 | 49° | 71° | 145° | - |
| | 14E12/14D12 | 43° | 90° | - | - |
| | 14E15/14D15 | 17° | 110° | 155° | 234° |
| | 14E18/14D18 | 15° | 90° | 180° | 270° |
| | 1419 | 30° | 165° | 315° | - |
| | 14E19/14D19 | 30° | 165° | 315° | - |
| 18 | 183G1 | - | - | - | - |
| | 18X2M3 | - | - | - | - |
| | 1823 | - | 158° | - | 270° |
| | 1832<br>18E32/18D32 | 85° | 138° | 222° | 265° |

## SMSPKE0 (only for UTS layouts using #16 contacts)

When one of these dummy contacts is used, the UTS connector will only mate with a connector which has a vacant cavity at the corresponding position.

The material used is polyamide 6.6.

# Part Number Index

## Connectors


UTS0104P..... P. 68
UTS0104S..... P. 68
UTS010D6P..... P. 84
UTS010D6S..... P. 84
UTS710D6P..... P. 84
UTS710D6P32..... P. 84
UTS710D6S..... P. 84
UTS710D6S32..... P. 84
UTS010D98P..... P. 88
UTS010D98S..... P. 88
UTS010E6P..... P. 84
UTS010E6S..... P. 84
UTS010E7P..... P. 96
UTS010E7S..... P. 96
UTS010E98P..... P. 88
UTS010E98S..... P. 88
UTS0124P..... P. 52
UTS0128P..... P. 100
UTS0128S..... P. 100
UTS012D10P..... P. 112
UTS012D10S..... P. 112
UTS012D14P..... P. 128
UTS012D14S..... P. 128
UTS012D2P..... P. 24
UTS012D2S..... P. 24
UTS012D3P..... P. 48
UTS012D3S..... P. 48
UTS012D4P..... P. 52
UTS012D4S..... P. 52
UTS012D8P..... P. 104
UTS012D8S..... P. 104
UTS012E10P..... P. 112
UTS012E10S..... P. 112
UTS012E14P..... P. 128
UTS012E14S..... P. 128
UTS012E2P..... P. 24
UTS012E2S..... P. 24
UTS012E3P..... P. 48
UTS012E3S..... P. 48
UTS012E4P..... P. 52
UTS012E4S..... P. 52
UTS012E8P..... P. 104
UTS012E8S..... P. 104
UTS01412P..... P. 116
UTS01412S..... P. 116
UTS0142G1P..... P. 32
UTS0147P..... P. 92
UTS0147S..... P. 92
UTS01492P..... P. 124
UTS01492S..... P. 124
UTS014D7P..... P. 92
UTS014D7S..... P. 92
UTS014D12P..... P. 120
UTS014D12S..... P. 120
UTS014D15P..... P. 132
UTS014D15S..... P. 132
UTS014D18P..... P. 136
UTS014D18S..... P. 136
UTS014D19P..... P. 140
UTS014D19S..... P. 140
UTS014D5P..... P. 72
UTS014D5S..... P. 72
UTS014E12P..... P. 120
UTS014E12S..... P. 120
UTS014E15P..... P. 132
UTS014E15S..... P. 132
UTS014E18P..... P. 136
UTS014E18S..... P. 136
UTS014E19P..... P. 140
UTS014E19S..... P. 140
UTS014E5P..... P. 72
UTS014E5S..... P. 72
UTS014E7P..... P. 92
UTS014E7S..... P. 92
UTS01823P..... P. 144
UTS01823S..... P. 144
UTS018E32P..... P. 148
UTS08D2P..... P. 20
UTS08D2S..... P. 20
UTS08D33P..... P. 44
UTS08D33S..... P. 44
UTS08D3AP..... P. 40
UTS08D3AS..... P. 40
UTS08D3P..... P. 36
UTS08D3S..... P. 36
UTS08D4P..... P. 60
UTS08D4S..... P. 60
UTS08D98P..... P. 40
UTS08D98S..... P. 40
UTS08E2P..... P. 20
UTS08E2S..... P. 20
UTS08E33P..... P. 44
UTS08E33S..... P. 44
UTS08E3AP..... P. 40
UTS08E3AS..... P. 40
UTS08E3P..... P. 36
UTS08E3S..... P. 36
UTS08E4P..... P. 60
UTS08E4S..... P. 60
UTS08E98P..... P. 40
UTS08E98S..... P. 40
UTS1GJC104P..... P. 68
UTS1GJC128P..... P. 100
UTS1GJC1412P..... P. 116
UTS1GJC147P..... P. 92
UTS1GJC1492P..... P. 124
UTS1GN104P..... P. 68
UTS1GN128P..... P. 100
UTS1GN1412P..... P. 116
UTS1GN147P..... P. 92
UTS1GN1492P..... P. 124
UTS1JC102W2P..... P. 64
UTS1JC102W2S..... P. 64
UTS1JC103P..... P. 28
UTS1JC103S..... P. 28
UTS1JC103W3P..... P. 80
UTS1JC103W3S..... P. 80
UTS1JC104P..... P. 68
UTS1JC104S..... P. 68
UTS1JC106P..... P. 84
UTS1JC106S..... P. 84
UTS1JC1210P..... P. 112
UTS1JC1210S..... P. 112
UTS1JC124P..... P. 52
UTS1JC124PSCR..... P. 52
UTS1JC124S..... P. 52
UTS1JC128P..... P. 100
UTS1JC128S..... P. 100
UTS1JC1412P..... P. 116
UTS1JC1412S..... P. 116
UTS1JC1419P..... P. 140
UTS1JC1419S..... P. 140
UTS1JC142G1P..... P. 32
UTS1JC142G1S..... P. 32
UTS1JC147P..... P. 92
UTS1JC1492P..... P. 124
UTS1JC1492S..... P. 124
UTS1JC147PSCR..... P. 92
UTS1JC147S..... P. 92
UTS1JC148P..... P. 108
UTS1JC148S..... P. 108
UTS1JC1823P..... P. 144
UTS1JC1823S..... P. 144
UTS1JC1832P..... P. 148
UTS1JC1832S..... P. 148
UTS1JC18LCN..... P. 152
UTS1JC18MPN..... P. 156
UTS6102W2P..... P. 64
UTS6102W2S..... P. 64
UTS6103P..... P. 28
UTS6103S..... P. 28
UTS6103W3P..... P. 80
UTS6103W3S..... P. 80
UTS6104P..... P. 68
UTS6104S..... P. 68
UTS6106P..... P. 84
UTS6106S..... P. 84
UTS610E6P..... P. 84

## Part Number Index (Continued)


UTS610E6S..... P. 84
UTS610E7P ..... P. 96
UTS610E7S ..... P. 96
UTS610E98P..... P. 88
UTS610E98S..... P. 88
UTS61210P..... P. 112
UTS61210S..... P. 112
UTS6124P..... P. 52
UTS6124PSCR..... P. 52
UTS6124SSCR..... P. 52
UTS6128P..... P. 100
UTS6128S..... P. 100
UTS612E10P..... P. 112
UTS612E10S..... P. 112
UTS612E14P..... P. 128
UTS612E14S..... P. 128
UTS612E2P..... P. 24
UTS612E2S..... P. 24
UTS612E3P..... P. 48
UTS612E3S..... P. 48
UTS612E4P..... P. 52
UTS612E4S..... P. 52
UTS612E8P..... P. 104
UTS612E8S..... P. 104
UTS61412P..... P. 116
UTS61412S..... P. 116
UTS61419P..... P. 140
UTS61419S..... P. 140
UTS6142G1P..... P. 32
UTS6142G1S..... P. 32
UTS6147P..... P. 92
UTS6147S..... P. 92
UTS6148P..... P. 108
UTS6148S..... P. 108
UTS61492P..... P. 124
UTS61492S..... P. 124
UTS614E12P..... P. 120
UTS614E12S..... P. 120
UTS614E15P..... P. 132
UTS614E15S..... P. 132
UTS614E18P..... P. 136
UTS614E18S..... P. 136
UTS614E19P..... P. 140
UTS614E19S..... P. 140
UTS614E5P..... P. 72
UTS614E5S..... P. 72
UTS61823P..... P. 144
UTS61823S..... P. 144
UTS61832P..... P. 148
UTS61832S..... P. 148
UTS6183G1P..... P. 56
UTS618X2M3P..... P. 76
UTS618X2M3S..... P. 76
UTS68E2P..... P. 20
UTS68E2S..... P. 20
UTS68E33P..... P. 44
UTS68E33S..... P. 44
UTS68E3AP..... P. 40
UTS68E3AS..... P. 40
UTS68E3P..... P. 36
UTS68E3S..... P. 36
UTS68E4P..... P. 60
UTS68E4S..... P. 60
UTS68E98P..... P. 40
UTS68E98S..... P. 40
UTS6GJC104S..... P. 68
UTS6GJC128S..... P. 100
UTS6GJC1412S..... P. 116
UTS6GJC147S..... P. 92
UTS6GJC1492S..... P. 124
UTS6GN104S..... P. 68
UTS6GN128S..... P. 100
UTS6GN1412S..... P. 116
UTS6GN147S..... P. 92
UTS6GN1492S..... P. 124
UTS6JC102W2P..... P. 64
UTS6JC102W2S..... P. 64
UTS6JC103P..... P. 28
UTS6JC103S..... P. 28
UTS6JC103W3P..... P. 80
UTS6JC103W3S..... P. 80
UTS6JC104P..... P. 68
UTS6JC104S..... P. 68
UTS6JC106P..... P. 84
UTS6JC106S..... P. 84
UTS6JC10E6P..... P. 84
UTS6JC10E6S..... P. 84
UTS6JC10E7P..... P. 96
UTS6JC10E7S..... P. 96
UTS6JC10E98P..... P. 88
UTS6JC10E98S..... P. 88
UTS6JC1210P..... P. 112
UTS6JC1210S..... P. 112
UTS6JC124P..... P. 52
UTS6JC124PSCR..... P. 52
UTS6JC124S..... P. 52
UTS6JC124SSCR..... P. 52
UTS6JC128P..... P. 100
UTS6JC128S..... P. 100
UTS6JC12E10P..... P. 112
UTS6JC12E10S..... P. 112
UTS6JC12E14P..... P. 128
UTS6JC12E14S..... P. 128
UTS6JC12E2P..... P. 24
UTS6JC12E2S..... P. 24
UTS6JC12E3P..... P. 48
UTS6JC12E3S..... P. 48
UTS6JC12E4P..... P. 52
UTS6JC12E4S..... P. 52
UTS6JC12E8P..... P. 104
UTS6JC12E8S..... P. 104
UTS6JC1412P..... P. 116
UTS6JC1412S..... P. 116
UTS6JC1419P..... P. 140
UTS6JC1419S..... P. 140
UTS6JC142G1P..... P. 32
UTS6JC142G1S..... P. 32
UTS6JC147P..... P. 92
UTS6JC147PSCR..... P. 92
UTS6JC147S..... P. 92
UTS6JC147SSCR..... P. 92
UTS6JC1492P..... P. 124
UTS6JC1492S..... P. 124
UTS6JC148P..... P. 108
UTS6JC148S..... P. 108
UTS6JC14E12P..... P. 120
UTS6JC14E12S..... P. 120
UTS6JC14E15P..... P. 132
UTS6JC14E15S..... P. 132
UTS6JC14E18P..... P. 136
UTS6JC14E18S..... P. 136
UTS6JC14E19P..... P. 140
UTS6JC14E19S..... P. 140
UTS6JC14E5P..... P. 72
UTS6JC14E5S..... P. 72
UTS6JC14E7P..... P. 92
UTS6JC14E7S..... P. 92
UTS6JC1823P..... P. 144
UTS6JC1823S..... P. 144
UTS6JC1832P..... P. 148
UTS6JC1832S..... P. 148
UTS6JC183G1P..... P. 56
UTS6JC18LCN..... P. 152
UTS6JC18MPN..... P. 156
UTS6JC18X2M3P..... P. 76
UTS6JC18X2M3S..... P. 76
UTS6JC8E2P..... P. 20
UTS6JC8E2S..... P. 20
UTS6JC8E33P..... P. 44
UTS6JC8E33S..... P. 44
UTS6JC8E3AP..... P. 40
UTS6JC8E3AS..... P. 40
UTS6JC8E3P..... P. 36
UTS6JC8E3S..... P. 36
UTS6JC8E4P..... P. 60
UTS6JC8E4S..... P. 60
UTS6JC8E98P..... P. 40
UTS6JC8E98S..... P. 40
UTS7102W2P..... P. 64

UTS7102W2S..... P. 64
UTS7103P..... P. 28
UTS7103S ..... P. 28
UTS7103W3P..... P. 80
UTS7103W3S..... P. 80
UTS7104P..... P. 68
UTS7104S..... P. 68
UTS7106P..... P. 84
UTS7106S..... P. 84
UTS710D98P..... P. 88
UTS710D98P32..... P. 88
UTS710D98S..... P. 88
UTS710D98S32..... P. 88
UTS710E6P..... P. 84
UTS710E6S..... P. 84
UTS710E6PM16..... P. 84
UTS710E6SM16..... P. 84
UTS710E7P..... P. 96
UTS710E7S..... P. 96
UTS710E7PM16..... P. 96
UTS710E7SM16..... P. 96
UTS710E98P..... P. 88
UTS710E98S..... P. 88
UTS71210P..... P. 112
UTS71210S..... P. 112
UTS7124P..... P. 52
UTS7124PSCR..... P. 52
UTS7124S..... P. 52
UTS7124SSCR..... P. 52
UTS7128P..... P. 100
UTS7128PM20..... P. 100
UTS7128PM20NUT..... P. 100
UTS7128PSEK9..... P. 100
UTS7128S..... P. 100
UTS7128SM20..... P. 100
UTS7128SM20NUT..... P. 100
UTS712D10P..... P. 112
UTS712D10P32..... P. 112
UTS712D10S..... P. 112
UTS712D10S32..... P. 112
UTS712D14P..... P. 128
UTS712D14P32..... P. 128
UTS712D14S..... P. 128
UTS712D14S32..... P. 128
UTS712D2P..... P. 24
UTS712D2P32..... P. 24
UTS712D2S..... P. 24
UTS712D2S32..... P. 24
UTS712D3P..... P. 48
UTS712D3P32..... P. 48
UTS712D3S..... P. 48
UTS712D3S32..... P. 48
UTS712D4P..... P. 52
UTS712D4P32..... P. 52
UTS712D4S..... P. 52
UTS712D4S32..... P. 52
UTS712D8P..... P. 104
UTS712D8P32..... P. 104
UTS712D8S..... P. 104
UTS712D8S32..... P. 104
UTS712E10P..... P. 112
UTS712E10S..... P. 112
UTS712E14P..... P. 128
UTS712E14S..... P. 128
UTS712E2P..... P. 24
UTS712E2S..... P. 24
UTS712E3P..... P. 48
UTS712E3S..... P. 48
UTS712E4P..... P. 52
UTS712E4S..... P. 52
UTS712E8P..... P. 104
UTS712E8S..... P. 104
UTS71412P..... P. 116
UTS71412S..... P. 116
UTS71419P..... P. 140
UTS71419S..... P. 140
UTS7142G1P..... P. 32
UTS7142G1S..... P. 32
UTS7142G1SNPT..... P. 32
UTS7147P..... P. 92
UTS7147PSCR..... P. 92
UTS7147PSEK9..... P. 92
UTS7147S..... P. 92
UTS71492P..... P. 124
UTS71492S..... P. 124
UTS7148P..... P. 108
UTS7148S..... P. 108
UTS7147SSCR..... P. 92
UTS714D7P..... P. 92
UTS714D7P32..... P. 92
UTS714D7S..... P. 92
UTS714D7S32..... P. 92
UTS714D12P..... P. 120
UTS714D12P32..... P. 120
UTS714D12S..... P. 120
UTS714D12S32..... P. 120
UTS714D15P..... P. 132
UTS714D15P32..... P. 132
UTS714D15S..... P. 132
UTS714D15S32..... P. 132
UTS714D18P..... P. 136
UTS714D18P32..... P. 136
UTS714D18S..... P. 136
UTS714D18S32..... P. 136
UTS714D19P..... P. 140
UTS714D19P32..... P. 140
UTS714D19S..... P. 140
UTS714D19S32..... P. 140
UTS714D5P..... P. 72
UTS714D5P32..... P. 72
UTS714D5S..... P. 72
UTS714D5S32..... P. 72
UTS714E12P..... P. 120
UTS714E12S..... P. 120
UTS714E15P..... P. 132
UTS714E15S..... P. 125
UTS714E18P..... P. 136
UTS714E18S..... P. 136
UTS714E19P..... P. 140
UTS714E19S..... P. 140
UTS714E5P..... P. 72
UTS714E5S..... P. 72
UTS714E7P..... P. 92
UTS714E7S..... P. 92
UTS71823P..... P. 144
UTS71823S..... P. 144
UTS71832P..... P. 148
UTS71832S..... P. 148
UTS7183G1SNPT..... P. 56
UTS718LCN..... P. 152
UTS718MPN..... P. 156
UTS718X2M3PNPT..... P. 76
UTS718X2M3SNPT..... P. 76
UTS78D2P..... P. 20
UTS78D2P32..... P. 20
UTS78D2S..... P. 20
UTS78D2S32..... P. 20
UTS78D33P..... P. 44
UTS78D33P32..... P. 44
UTS78D33S..... P. 44
UTS78D33S32..... P. 44
UTS78D3AP..... P. 40
UTS78D3AP32..... P. 40
UTS78D3AS..... P. 40
UTS78D3AS32..... P. 40
UTS78D3P..... P. 36
UTS78D3P32..... P. 36
UTS78D3S..... P. 36
UTS78D3S32..... P. 36
UTS78D4P..... P. 60
UTS78D4P32..... P. 60
UTS78D4S..... P. 60
UTS78D4S32..... P. 60
UTS78D98P..... P. 40
UTS78D98P32..... P. 40
UTS78D98S..... P. 40
UTS78D98S32..... P. 40
UTS78E2P..... P. 20
UTS78E2S..... P. 20

# Part Number Index (Continued)


UTS78E33P..... P. 44
UTS78E33S..... P. 44
UTS78E3AP..... P. 40
UTS78E3AS..... P. 40
UTS78E3P..... P. 36
UTS78E3S..... P. 36
UTS78E4P ..... P. 60
UTS78E4S..... P. 60
UTS78E98P..... P. 40
UTS78E98S..... P. 40
UTS7GJC104P..... P. 68
UTS7GJC128P..... P. 100
UTS7GJC1412P..... P. 116
UTS7GJC147P..... P. 92
UTS7GJC1492P..... P. 124
UTS7GN104P..... P. 68
UTS7GN128P..... P. 100
UTS7GN1412P..... P. 116
UTS7GN147P..... P. 92
UTS7GN1492P..... P. 124


## Overmoulded Cable Assemblies


HAUTS0V102W2PRA100..... P. 64
HAUTS0V102W2PST100..... P. 64
HAUTS0V102W2SRA100..... P. 64
HAUTS0V102W2SST100..... P. 64
HAUTS0V103PRA100..... P. 28
HAUTS0V103PST100..... P. 28
HAUTS0V103SRA100..... P. 28
HAUTS0V103SST100..... P. 28
HAUTS0V103W3PRA100..... P. 80
HAUTS0V103W3PST100..... P. 80
HAUTS0V103W3SRA100..... P. 80
HAUTS0V103W3SST100..... P. 80
HAUTS0V104PRA100..... P. 68
HAUTS0V104PST100..... P. 68
HAUTS0V104SRA100..... P. 68
HAUTS0V104SST100..... P. 68
HAUTS0V106PRA100..... P. 84
HAUTS0V106PST100..... P. 84
HAUTS0V106SRA100..... P. 84
HAUTS0V106SST100..... P. 84
HAUTS0V10E6PRA100..... P. 84
HAUTS0V10E6PST100..... P. 84
HAUTS0V10E6SRA100..... P. 84
HAUTS0V10E6SST100..... P. 84
HAUTS0V10E7PRA100..... P. 96
HAUTS0V10E7PST100..... P. 96
HAUTS0V10E7SRA100..... P. 96
HAUTS0V10E7SST100..... P. 96
HAUTS0V10E98PRA100..... P. 88
HAUTS0V10E98PST100..... P. 88
HAUTS0V10E98SRA100..... P. 88
HAUTS0V10E98SST100..... P. 88
HAUTS0V1210PRA100..... P. 112
HAUTS0V1210PST100..... P. 112
HAUTS0V1210SRA100..... P. 112
HAUTS0V1210SST100..... P. 112
HAUTS0V124PRA100..... P. 52
HAUTS0V124PST100..... P. 52
HAUTS0V124SRA100..... P. 52
HAUTS0V124SST100..... P. 52
HAUTS0V128PRA100..... P. 100
HAUTS0V128PST100..... P. 100
HAUTS0V128SRA100..... P. 100
HAUTS0V128SST100..... P. 100
HAUTS0V12E10PRA100..... P. 112
HAUTS0V12E10PST100..... P. 112
HAUTS0V12E10SRA100..... P. 112
HAUTS0V12E10SST100..... P. 112
HAUTS0V12E14PRA100..... P. 128
HAUTS0V12E14PST100..... P. 128
HAUTS0V12E14SRA100..... P. 128
HAUTS0V12E14SST100..... P. 128
HAUTS0V12E2PRA100..... P. 24
HAUTS0V12E2PST100..... P. 24
HAUTS0V12E2SRA100..... P. 24
HAUTS0V12E2SST100..... P. 24
HAUTS0V12E3PRA100..... P. 48
HAUTS0V12E3PST100..... P. 48
HAUTS0V12E3SRA100..... P. 48
HAUTS0V12E3SST100..... P. 48
HAUTS0V12E4PRA100..... P. 52
HAUTS0V12E4PST100..... P. 52
HAUTS0V12E4SRA100..... P. 52
HAUTS0V12E4SST100..... P. 52
HAUTS0V12E8PRA100..... P. 104
HAUTS0V12E8PST100..... P. 104
HAUTS0V12E8SRA100..... P. 104
HAUTS0V12E8SST100..... P. 104
HAUTS0V1412PRA100..... P. 116
HAUTS0V1412PST100..... P. 116
HAUTS0V1412SRA100..... P. 116
HAUTS0V1412SST100..... P. 116
HAUTS0V1419PRA100..... P. 140
HAUTS0V1419PST100..... P. 140
HAUTS0V1419SRA100..... P. 140
HAUTS0V1419SST100..... P. 140
HAUTS0V147PRA100..... P. 92
HAUTS0V147PST100..... P. 92
HAUTS0V147SRA100..... P. 92
HAUTS0V147SST100..... P. 92
HAUTS0V14E12PRA100..... P. 120
HAUTS0V14E12PST100..... P. 120
HAUTS0V14E12SRA100..... P. 120
HAUTS0V14E12SST100..... P. 120
HAUTS0V14E15PRA100..... P. 132
HAUTS0V14E15PST100..... P. 132
HAUTS0V14E15SRA100..... P. 132
HAUTS0V14E15SST100..... P. 132
HAUTS0V14E18PRA100..... P. 136
HAUTS0V14E18PST100..... P. 136
HAUTS0V14E18SRA100..... P. 136
HAUTS0V14E18SST100..... P. 136
HAUTS0V14E19PRA100..... P. 140
HAUTS0V14E19PST100..... P. 140
HAUTS0V14E19SRA100..... P. 140
HAUTS0V14E19SST100..... P. 140
HAUTS0V14E5PRA100..... P. 72
HAUTS0V14E5PST100..... P. 72
HAUTS0V14E5SRA100..... P. 72
HAUTS0V14E5SST100..... P. 72
HAUTS0V14E7PRA100..... P. 92
HAUTS0V14E7PST100..... P. 92
HAUTS0V14E7SRA100..... P. 92
HAUTS0V14E7SST100..... P. 92
HAUTS0V1823PRA100..... P. 144
HAUTS0V1823PST100..... P. 144
HAUTS0V1823SRA100..... P. 144
HAUTS0V1823SST100..... P. 144
HAUTS0V1832PRA100..... P. 148
HAUTS0V1832PST100..... P. 148
HAUTS0V1832SRA100..... P. 148
HAUTS0V1832SST100..... P. 148
HAUTS0V8E2PRA100..... P. 20
HAUTS0V8E2PST100..... P. 20
HAUTS0V8E2SRA100..... P. 20
HAUTS0V8E2SST100..... P. 20
HAUTS0V8E33APRA100..... P. 44
HAUTS0V8E33APST100..... P. 44
HAUTS0V8E33ASRA100..... P. 44
HAUTS0V8E33ASST100..... P. 44
HAUTS0V8E3APRA100..... P. 40
HAUTS0V8E3APST100..... P. 40
HAUTS0V8E3ASRA100..... P. 40
HAUTS0V8E3ASST100..... P. 40
HAUTS0V8E3PRA100..... P. 36
HAUTS0V8E3PST100..... P. 36
HAUTS0V8E3SRA100..... P. 36
HAUTS0V8E3SST100..... P. 36
HAUTS0V8E4PRA100..... P. 60
HAUTS0V8E4PST100..... P. 60
HAUTS0V8E4SRA100..... P. 60
HAUTS0V8E4SST100..... P. 60

## Accessories


85005585A..... P. 22
85005586A..... P. 30
85005587A..... P. 26
85005588A..... P. 34
85005590A..... P. 58
85005594..... P. 22
85005595..... P. 30
85005596..... P. 26
85005597..... P. 34
85005599..... P. 58
UTS18DCG2..... P. 154
UTS610CCRG..... P. 30
UTS610CCRR..... P. 30
UTS610CCRY..... P. 30
UTS612CCRG..... P. 26
UTS612CCRR..... P. 26
UTS612CCRY..... P. 26
UTS614CCRG..... P. 34
UTS614CCRR..... P. 34
UTS614CCRY..... P. 34
UTS618CCRG..... P. 58
UTS618CCRR..... P. 58
UTS618CCRY..... P. 58
UTS618DCG2..... P. 154
UTFD11B..... P. 22
UTFD12B..... P. 30
UTFD13B..... P. 26
UTFD14B..... P. 34
UTFD16B..... P. 58
UTS10DCG..... P. 30
UTS10DCGE..... P. 74
UTS10DCGR..... P. 30
UTS12DCG..... P. 26
UTS12DCGE..... P. 26
UTS12DCGR..... P. 26
UTS14DCG..... P. 34
UTS14DCGE..... P. 78
UTS14DCGR..... P. 34
UTS18DCG..... P. 58
UTS18DCGE..... P. 146
UTS18DCGR..... P. 58
UTS610DCG..... P. 30
UTS612DCG..... P. 26
UTS614DCG..... P. 34
UTS618DCG..... P. 58
UTS68C..... P. 22
UTS68CCRG..... P. 22
UTS68CCRR..... P. 22
UTS68CCRY..... P. 22
UTS710CCRG..... P. 30
UTS710CCRR..... P. 30
UTS710CCRY..... P. 30
UTS712CCRG..... P. 26
UTS712CCRR..... P. 26
UTS712CCRY..... P. 26
UTS714CCRG..... P. 34
UTS714CCRR..... P. 34
UTS714CCRY..... P. 34
UTS718CCRG..... P. 58
UTS718CCRR..... P. 58
UTS718CCRY..... P. 58
UTS78CCRG..... P. 22
UTS78CCRR..... P. 22
UTS78CCRY..... P. 22
UTS8DCGE..... P. 22
UTS8DCGR..... P. 22


## Contacts


82911456A..... P. 165
82911456K..... P. 165
82911457NA..... P. 165
82911457NK..... P. 165
82911458A..... P. 165
82911458K..... P. 165
82911459NA..... P. 165
82911459NK..... P. 165
82911460A..... P. 165
82911460K..... P. 165
82911461NA..... P. 165
82911461NK..... P. 165
82911462A..... P. 165
82911462K..... P. 165
82911463NA..... P. 165
82911463NK..... P. 165
82911464A..... P. 165
82911464K..... P. 165
82911465NA..... P. 165
82911465NK..... P. 165
82911466A..... P. 165
82911466K..... P. 165
82911467NA..... P. 165
82911467NK..... P. 165
82911684NPC..... P. 168
82911685NPC..... P. 168
82913600A..... P. 165
82913601A..... P. 165
82913602A..... P. 165
82913603A..... P. 165
82913604A..... P. 165
82913605A..... P. 165
82913606A..... P. 165
82913607A..... P. 165
82913608A..... P. 165
82913609A..... P. 165
RC14M30GE7K..... P. 166
RC14M30K..... P. 165
RC16M23GE7K..... P. 166
RC16M23K..... P. 165
RC18W3K..... P. 165
RC20M12E8K..... P. 168
RC20M12E83K..... P. 168
RC20M12E84J..... P. 168
RC20M12E85K..... P. 168
RC20M12E86K..... P. 168
RC20M12E87K..... P. 168
RC20M12GE7K..... P. 166
RC20M12K..... P. 165
RC20M13GE7K..... P. 166
RC20M13K..... P. 165
RC20W3K..... P. 165
RC24M9GE7K..... P. 166
RC24M9K..... P. 165
RC24W3K..... P. 165
RC28M1GE7K..... P. 166
RC28M1K..... P. 165
RCDX6015D28..... P. 201
RCDX6016D28..... P. 200
RCDX6018D28..... P. 200
RCDX6019D28..... P. 201
RCDX6024D28..... P. 200
RCDX6026D28..... P. 200
RCDX602D28..... P. 205
RCDX6031D28..... P. 201
RCDX6032D28..... P. 200
RCDX6034D28..... P. 200
RCDX6036D28..... P. 200
RCDX6052D28..... P. 200
RCDXB0553..... P. 205
RCDXK1D28..... P. 200
RCPOF1000B..... P. 171
RCW5016K..... P. 168
RCW50A7K..... P. 168
RFD26L1D28..... P. 196
RM14M30GE1K..... P. 166
RM14M30K..... P. 165
RM16M23GE1K..... P. 166
RM16M23K..... P. 165
RM18W3K..... P. 165
M20M12E8K..... P. 168
RM20M12E83K..... P. 168
RM20M12E84K..... P. 168
RM20M12GE1K..... P. 166
RM20M12K..... P. 165
RM20M13GE1K..... P. 166
RM20M13K..... P. 165
RM20W3K..... P. 165
RM24M9GE1K..... P. 166
RM24M9K..... P. 165

# Part Number Index (Continued)


RM24W3K..... P. 165
RM28M1GE1K ..... P. 166
RM28M1K..... P. 165
RMD26L1D28 ..... P. 205
RMDX6015D28..... P. 201
RRMDX6018D28..... P. 200
RMDX6019D28..... P. 201
RMDX6024D28..... P. 200
RMDX6026D28..... P. 200
RMDX602D28..... P. 204
RMDX6031D28 ..... P. 201
RMDX6032D28 ..... P. 200
RMDX6034D28..... P. 200
RMDX6036D28..... P. 200
RMDX6050D28..... P. 200
RMDX6052D28..... P. 200
RMDXB0553..... P. 204
RMDXK10D28..... P. 200
RMPOF1000..... P. 171
RMW5016K..... P. 168
RMW50A7K..... P. 168
SC14M1S18..... P. 165
SC14M1S31..... P. 165
SC14M1TK6..... P. 165
SC14ML1S18..... P. 165
SC14ML1S31..... P. 165
SC14ML1TK6..... P. 165
SC16M11S18..... P. 165
SC16M11S31..... P. 165
SC16M11TK6..... P. 165
SC16M1S18..... P. 165
SC16M1S31..... P. 165
SC16M1TK6..... P. 165
SC16ML11S18..... P. 165
SC16ML11S31..... P. 165
SC16ML11TK6..... P. 165
SC16ML1S18..... P. 165
SC16ML1S31..... P. 165
SC16ML1TK6..... P. 165
SC20M1S18..... P. 165
SC20M1S31..... P. 165
SC20M1TK6..... P. 165
SC20ML1S18..... P. 165
SC20ML1S31..... P. 165
SC20ML1TK6..... P. 165
SC20W3S25..... P. 165
SC20W3TK6..... P. 165
SC20WL3S25..... P. 165
SC20WL3TK6..... P. 165
SC24M1S18..... P. 165
SC24M1S31..... P. 165
SC24M1TK6..... P. 165
SC24ML1S18..... P. 165
SC24ML1S31..... P. 165
SC24ML1TK6..... P. 165
SC24W3S25..... P. 165
SC24W3TK6..... P. 165
SC24WL3S25..... P. 165
SC24WL3TK6..... P. 165
SM14M1S18..... P. 165
SM14M1S31..... P. 165
SM14M1TK6..... P. 165
SM14ML1S18..... P. 165
SM14ML1S31..... P. 165
SM14ML1TK6..... P. 165
SM16M11S18..... P. 165
SM16M11S31..... P. 165
SM16M11TK6..... P. 165
SM16M1S18..... P. 165
SM16M1S31..... P. 165
SM16M1TK6..... P. 165
SM16ML11S18..... P. 165
SM16ML11S31..... P. 165
SM16ML11TK6..... P. 165
SM16ML1S18..... P. 165
SM16ML1S31..... P. 165
SM16ML1TK6..... P. 165
SM20M1S18..... P. 165
SM20M1S31..... P. 165
SM20M1TK6..... P. 165
SM20ML1S18..... P. 165
SM20ML1S31..... P. 165
SM20ML1TK6..... P. 165
SM20W3S26..... P. 165
SM20W3TK6..... P. 165
SM20WL3S26..... P. 165
SM20WL3TK6..... P. 165
SM24M1S18..... P. 165
SM24M1S31..... P. 165
SM24M1TK6..... P. 165
SM24ML1S18..... P. 165
SM24ML1S31..... P. 165
SM24ML1TK6..... P. 165
SM24W3S26..... P. 165
SM24W3TK6..... P. 165
SM24WL3S26..... P. 165
SM24WL3TK6..... P. 165


## Tooling


51060210924..... P. 175
51060210936..... P. 175
M10S1J..... P. 202
M10SG8..... P. 203
M317..... P. 175
MH860..... P. 175
MH86164G..... P. 175
MH86186..... P. 175
RX2025GE1..... P. 175
RX20D44..... P. 175
S16RCM14..... P. 175
S16RCM16..... P. 175
S16RCM20..... P. 175
S16SCM20..... P. 175
S16SCML1..... P. 175
S16SCML11..... P. 175
S20RCM..... P. 175
S20SCM20..... P. 175
S221..... P. 204
S23D2..... P. 204
S26D2..... P. 204
S80..... P. 203
S82..... P. 206
S83..... P. 203
S87..... P. 206
S88..... P. 206
SHANDLES..... P. 175
SL105..... P. 203
SL46D2..... P. 204
SL471..... P. 204
UH25..... P. 175
VGE10077A..... P. 175
VGE10078A..... P. 175

# Reliable People, Reliable Solutions

Your local contact

PEFC
10-31-1299

Our contribution to environmental protection:
This catalog is printed on PEFC certified paper
Advancement of sustainable wood cultivation. www.pefc.org

SOURIAU

www.souriau-industrial.com
contactindustry@souriau.com

Esterline
Connection Technologies

WCAUTSEUSEN01 © Copyright SOURIAU March 2014 - SOURIAU is a registered trademark
All information in this document presents only general particulars and shall not form part of any contract. All rights reserved to SOURIAU for changes without prior notification or public announcement. Any duplication is prohibited, unless approved in writing.