HAMMOND MANUFACTURING

Quality Products. Service Excellence.

Heavy Duty Elbow *HDSSEL Series*

- Cast Aluminum
- Large cover opening for easier cable pull through.

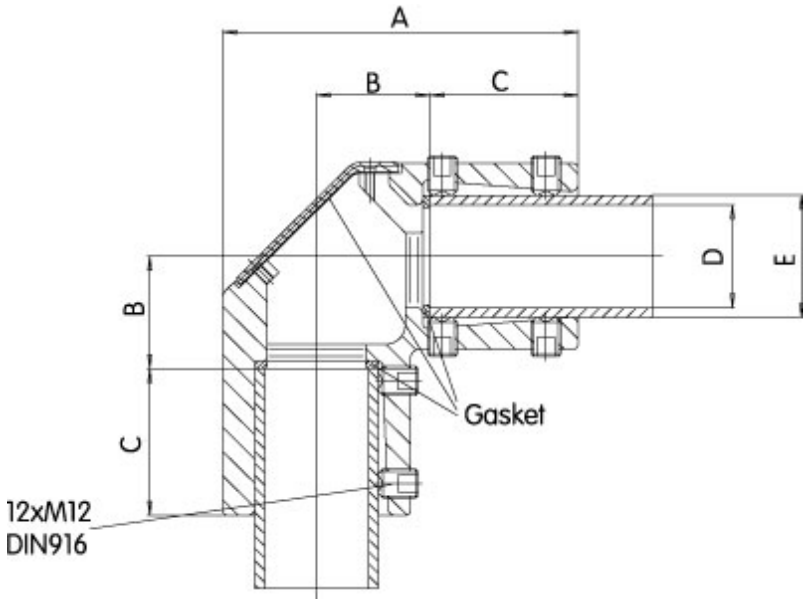

Part No.	System	A	B	C	D	E
R147-020-000R	50	144	46	60	42	50
R147-020-200R	80	193	56	83	70	80

Data subject to change without notice

© 2020. Hammond Manufacturing Ltd. All rights reserved.