NOTES:

1. ASSURE ASSEMBLY CAPABILITY BY MATCHING WITH MATING PART
2. DIMENSIONS IN [ ] ARE IN MILLIMETERS

REVISIONS			
REV.	DESCRIPTION	CHANGED BY	APPROVED BY
A	PRODUCTION RELEASE	-	-

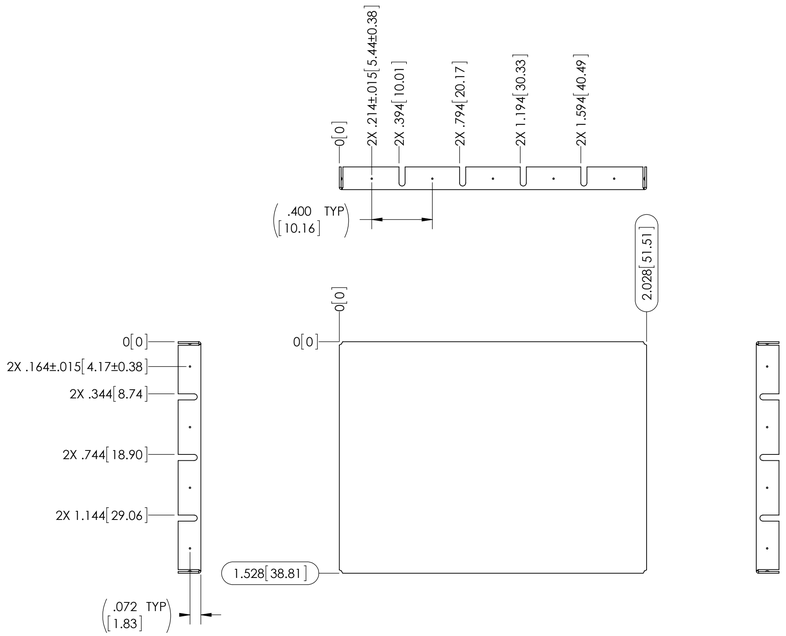

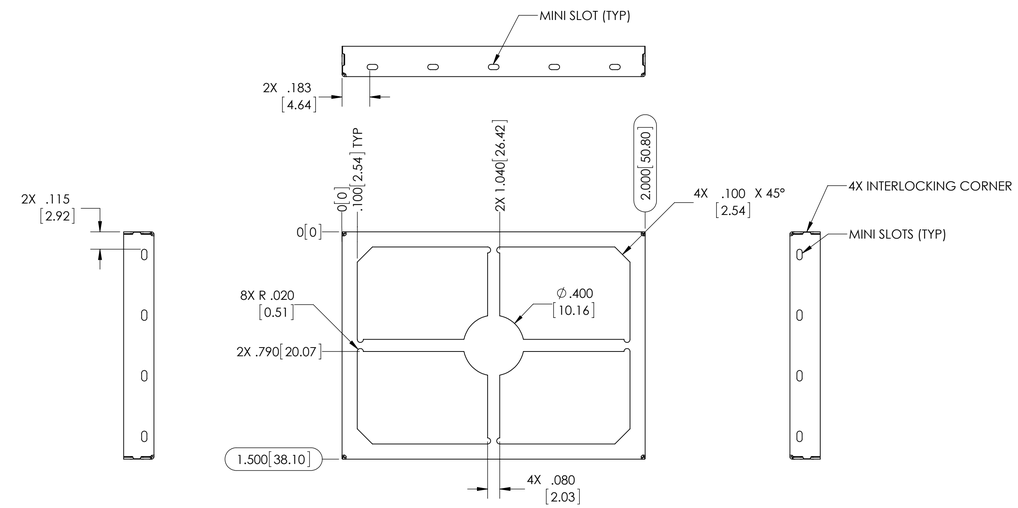

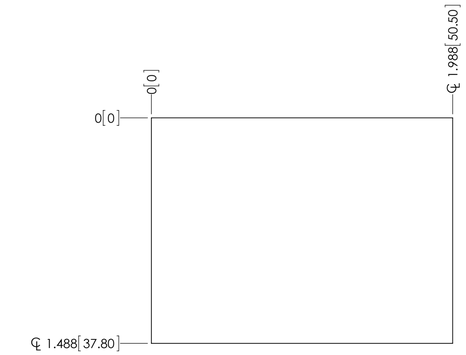

CENTERLINE PATTERN

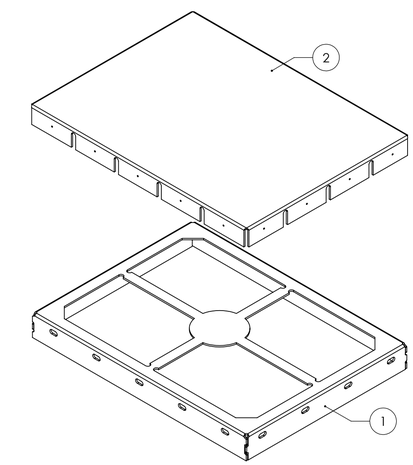

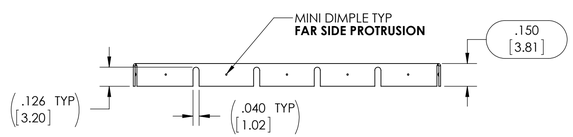

FORMED COVER

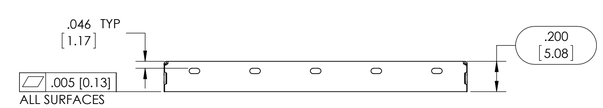

FORMED FRAME

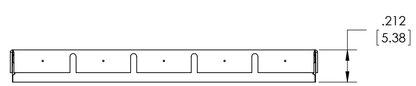

ASSEMBLY

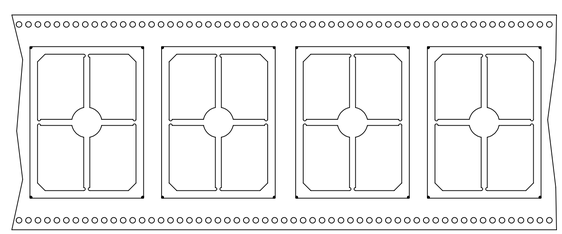

CARRIER TAPE

ITEM NO.	PART NUMBER	DESCRIPTION	QTY.
1	SMS-451 F	FRAME	1
3	SMS-451 PP		1

CARRIER TAPE SPECIFICATIONS

PART NUMBER	DESCRIPTION	OVERALL DIMENSIONS	OVERALL HEIGHT	CARRIER TAPE WIDTH	CARRIER TAPE PITCH	PARTS PER REEL
SMS-251-F	FRAME	2.000 X 1.500 [50.80 X 38.10]	.200 [5.08]	72 mm	48 mm	150
SMS-251-C	COVER	2.028 X 1.528 [51.51 X 38.81]	.150 [3.81]	N/A	N/A	BULK PACK

THIS DOCUMENT CONTAINS PROPRIETARY INFORMATION OWNED BY LEADERTECH, OR DEVELOPED AT ITS OWN PRIVATE EXPENSE, AND MAY NOT BE USED, DUPLICATED, OR DISCLOSED IN WHOLE OR IN PART FOR ANY PURPOSE INCLUDING DESIGN, MANUFACTURE OR PROCUREMENT WITHOUT THE WRITTEN PERMISSION OF LEADERTECH. LEADERTECH DOES NOT GUARANTEE OR WARRANT THE PERFORMANCE CHARACTERISTICS.

UNLESS OTHERWISE SPECIFIED:
- ALL DIMENSIONS ARE IN INCHES
- PART SHALL BE FREE OF BURRS AND SHARP EDGES
- ALL DIMENSIONS SHOWN APPLY BEFORE PLATINGS AND COATINGS
- RoHS COMPLIANT PER EU DIRECTIVE 2011/65/EU
- POI = POINT OF INTERSECTION

THIRD ANGLE PROJECTION

.XXX +/- .005[0.13] .XX +/- .010[0.25] .X +/- .020[0.51] ANGLES +/- 2°

DRAWN BY: JG 2015-11-09

APPROVED BY: Nick Demyanovich 2015.11.10 16:01:37 -05'00'

FINISH: MATTE

MATERIAL: 0.012[0.30] PRE TIN STEEL

LEADER TECH a HEICO company

TITLE: SURFACE MOUNT SHIELD

SIZE: D | DWG. NO.: SMS-451 | REV: A

SCALE: 2:1 | CAGE CODE: 4J674 | SHEET: 1 OF 1