470-013
StarShield™ EMI/RFI Shield Termination Backshell
for MIL-DTL-38999 Series III and IV Connectors

Environmental

Self Nestor

Rear End Options

Standard Length

High Ferrule Count

StarShield™ environmental backshell with self-nestor coupling and rear end options

Product Series
470 - StarShield™

Angular Function
S - Straight
H - 45°
J - 90°

Finish Code
(See Table II)

Ferrule Quantity Code
(See Table I)

Drilled Star
DS - Drilled Star - Optional
(Omit if Not Required)
(See Note 4)

470	H	S	013	NF	17	6	G	DS	-	T

Connector Designator
H - MIL-DTL-38999 Series III and IV

Basic Number

Order Number
(See Table I)

Rear End Options
B - Compression Nut with Band
C - Conduit Adapter
G - Gland Nut
T - Tinel Nut with Tinel Ring for Single Braid

Shrink Boot
T = Shrink boot optional
(Omit for None)
(See Table III)

B

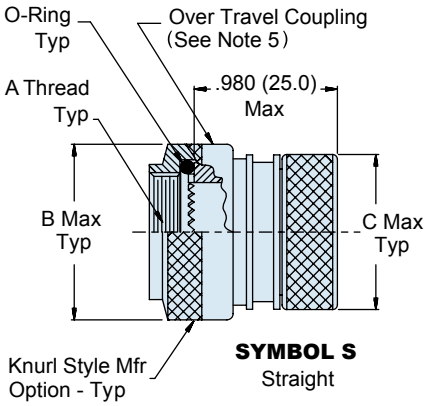

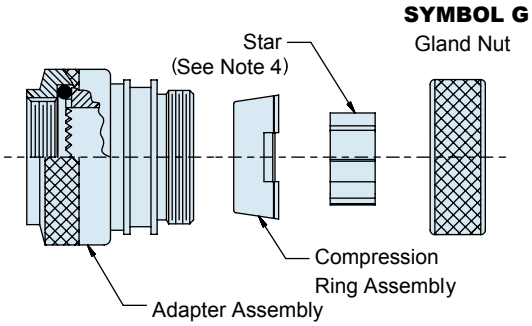

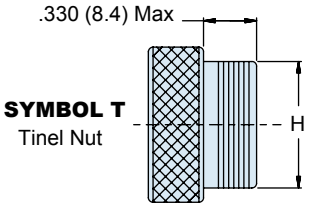

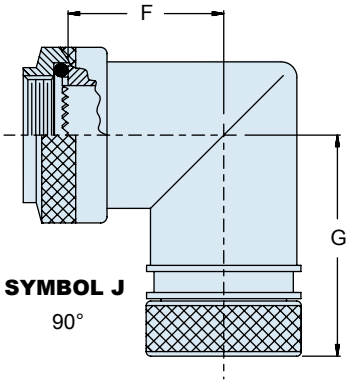

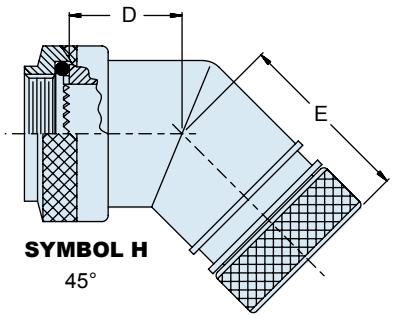

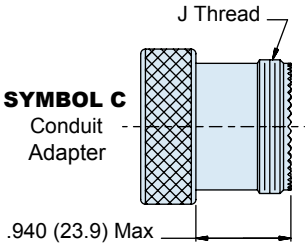

Dimensions in inches (millimeters) and are subject to change without notice.

© 2012 Glenair, Inc.

GLENAIR, INC. • 1211 AIR WAY • GLENDALE, CA 91201-2497 • 818-247-6000 • FAX 818-500-9912
www.glenair.com
E-Mail: sales@glenair.com

470-013
StarShield™ EMI/RFI Shield Termination Backshell
for MIL-DTL-38999 Series III and IV Connectors

Glenair®

Table I Dimensions

Order No.	Connector Shell Size Ref	A Thread ISO Metric	B Dia Max	C Dia Max	D Max	E Max	F Max
09	A/9	M12 X 1 - 6H	.75 (19.0)	.690 (17.5)	.490 (12.5)	1.000 (25.4)	.630 (16.0)
11	B/11	M15 X 1 - 6H	.870 (22.0)	.850 (21.5)	.510 (13.0)	1.020 (26.0)	.690 (17.5)
13	C/13	M18 X 1 - 6H	1.000 (25.4)	.890 (22.5)	.550 (14.0)	1.040 (26.5)	.750 (19.0)
15	D/15	M22 X 1 - 6H	1.200 (30.5)	1.000 (25.4)	.570 (14.5)	1.080 (27.5)	.810 (20.5)
17	E/17	M25 X 1 - 6H	1.320 (33.5)	1.120 (28.5)	.590 (15.0)	1.100 ((28.0)	.870 (22.0)
19	F/19	M28 X 1 - 6H	1.460 (37.0)	1.240 (31.5)	.610 (15.5)	1.120 (28.5)	.930 (23.5)
21	G/21	M31 X 1 - 6H	1.520 (38.5)	1.380 (35.0)	.650 (16.5)	1.140 (29.0)	1.000 (25.4)
23	H/23	M34 X 1 - 6H	1.650 (42.0)	1.500 (38.0)	.670 (17.0)	1.180 (30.0)	1.060 (27.0)
25	J/25	M37 X 1 - 6H	1.830 (46.5)	1.610 (41.0)	.710 (18.0)	1.220 (31.0)	1.120 (28.5)

Table I: Dimensions (Continued)

Order No.	G Max	H ± .003 (.08)	J Thread ISO Metric	K ± .004 (.10)	Ferrule Quantity (See Note 4)	
					Std.	Opt.
09	1.140 (29.0)	.435 (11.0)	M12 X 1 - 6g	.315 (8.00)	1	-
11	1.200 (30.5)	.623 (15.8)	M15 X 1 - 6g	.531 (13.5)	2	-
13	1.260 (32.0)	.746 (18.9)	M18 X 1 - 6g	.591 (15.0)	3	-
15	1.320 (33.5)	.871 (22.1)	M22 X 1 - 6g	.709 (18.0)	5	-
17	1.380 (35.0)	.996 (25.3)	M25 X 1 - 6g	.827 (21.0)	6	7
19	1.440 (36.5)	1.121 (28.5)	M28 X 1 - 6g	.945 (24.0)	7	-
21	1.520 (38.5)	1.245 (31.6)	M31 X 1 - 6g	1.063 (27.0)	9	11
23	1.570 (40.0)	1.371 (34.8)	M34 X 1 - 6g	1.181 (30.0)	10	13
25	1.630 (41.5)	1.371 (34.8)	M37 X 1 - 6g	1.299 (33.0)	12	17

Table II: Material and Finish Options

Code	Material; Finish Description
M	Aluminum; electroless nickel
MT	Aluminum; nickel - PTFE
NF	Aluminum; CAD/O. D. over electroless nickel
ZN	Aluminum; zinc nickel/O. D. over electroless nickel
ZR	Aluminum; zinc nickel/black over electroless nickel (RoHS)
ZRC	Aluminum; zinc nickel over electroless nickel (RoHS)
Z1	Stainless steel; passivate
ZM	Stainless steel; electroless nickel

Material/Finish

Backshell, elbows, coupling and gland nut, compression ring and star	Aluminum alloy or CRES/Table II
Tinel ring	Nickel-titanium alloy/n.a.
Band	CRES/Passivate
O-ring	Silicone/n.a.

Table III: Shrink Boot

Shell Size	Shrink Boot Part Number
09	770-001S1 04
11	770-001S1 06
13	770-001S1 06
15	770-001S1 07
17	770-001S1 07
19	770-001S1 08
21	770-001S1 08
23	770-001S1 08
25	770-001S1 09

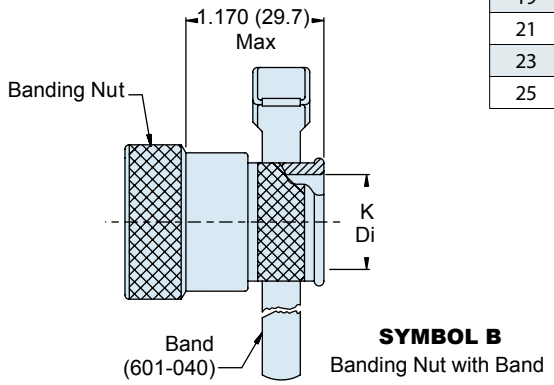

SYMBOL B
Banding Nut with Band

Notes:

1. Assembly identified with manufacturer's name, part number and date code, space permitting.
2. For effective grounding, connector with conductive finish should be used.
3. Glenair 600 Series Backshell Assembly Tools are recommended for assembly and installation.
4. Star not supplied with Order Number 09. Drilled star is available on order numbers 15-25 only. If optional ferrule quantity per Table I is selected, one split and one solid star will be supplied.
5. Over-travel coupling design provides self-seating and self-locking functionality, eliminating lock-wire requirements.
6. Ferrule kit sold separately.
   687-764 ferrule and HST device kit
   687-809 ferrule and sealing device kit
   687-748 solder ferrule
   687-841-01 HST flex device

Dimensions in inches (millimeters) and are subject to change without notice.

GLENAIR, INC. • 1211 AIR WAY • GLENDALE, CA 91201-2497 • 818-247-6000 • FAX 818-500-9912
www.glenair.com E-Mail: sales@glenair.com