REVISIONS					
REV	ECO	DESCRIPTION	DATE	BY	APPR
A1	-	RELEASED DRAWING	Jul-16-18	Flan	Tommy

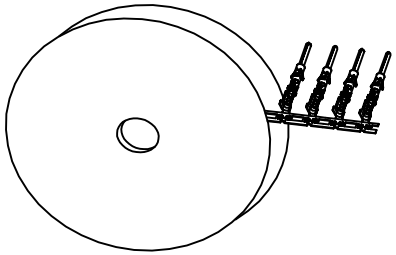

CONTACT ORIENTATION ON ROLL(3000PCS/COIL)

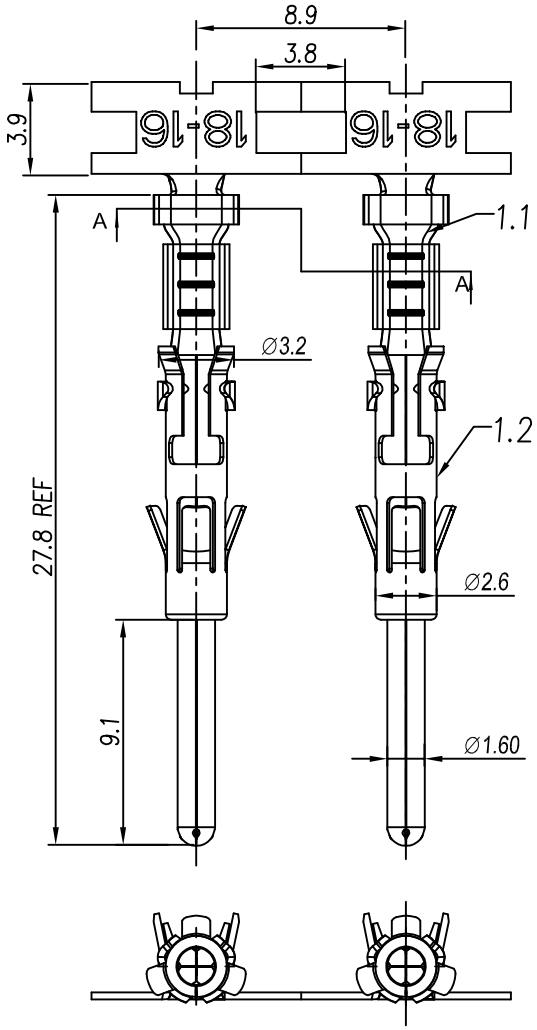

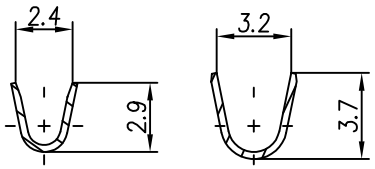

SECTION A-A

NOTES : (UNLESS OTHERWISE SPECIFIED)

1. MATERIAL :
   1.1. CONTACT BODY : COPPER ALLOY.
   1.2. OUTER SPRING : STAINLESS STEEL.
2. SPECIFICATIONS :
   2.1 CURRENT RATING : 13A MAX.
   2.2 TERMINATION TYPE : CRIMPING.
   2.3 WIRE RANGE : 18~16AWG.
   2.4 WIRE INSULATION DIA(MAX) : ϕ3.2mm.
3. RoHS COMPLIANT.
4. ALL DIMENSIONS ARE FOR REFERENCE USE ONLY.
5. AVAILABLE TOOLS :
   5.1 HAND CRIMPER : MFX-3954.
   5.2 CRIMP APPLICATOR : MFX-3957.
   5.3 EXTRACTION TOOL : QXRT16.

P/N	CONTACT PLATING(MATING AREA)
SP16M2T	TIN PLATING OVER NICKEL.
SP16M2N	NICKEL PLATING OVER COPPERIZE.
SP16M2F	GOLD FLASH PLATING OVER NICKEL.
SP16M2G5	5μ"GOLD PLATING OVER NICKEL.
SP16M2G10	10μ"GOLD PLATING OVER NICKEL.
SP16M2G15	15μ"GOLD PLATING OVER NICKEL.
SP16M2G30	30μ"GOLD PLATING OVER NICKEL.

QUANTITY	PART NUMBER	DESCRIPTION	ITEM

MATERIALS LIST

UNLESS OTHERWISE SPECIFIED
1) All dimensions are in metric(mm).
2) Tolerances are as follows:
1 PL DEC ±0.30 | Fractions ±1/64
2 PL DEC ±0.15 | Angles ±1°
3 PL DEC ±0.08
3) Note reference = △

MATERIAL SPECIFICATIONS:

PROCESS SPECIFICATIONS:

NEXT ASS'Y:

SIGNATURES		DATE
DRAWN:	Flan	Jul-16-18
CHECKED:	Tod	Jul-16-18
ENGINEER:		
APPROVAL:	Tommy	Jul-16-18
CUSTOMER:		

THIS DRAWING IS SUPPLIED FOR INFORMATION ONLY. DESIGN FEATURES, SPECIFICATIONS AND PERFORMANCE DATA SHOWN HEREON ARE THE PROPERTY OF THE AMPHENOL CORPORATION. NO RIGHTS OF REPRODUCTION ARE IMPLIED. ALL DIMENSIONS ARE SUBJECT TO NORMAL MANUFACTURING VARIATIONS.

Amphenol
Sine Systems - www.amphenol-sine.com
44724 Morley Drive
Clinton Township, MI 48036

ECO-MATE,PIN,CONTACT,
STAMPED,18-16AWG,SIZE 16

SIZE	TYPE	DWG NO:	REVISION
B	C-	SP16M2XX	A1

SCALE: NONE | SHEET 1 OF 1

TITLE: ECO-MATE,PIN,CONTACT,STAMPED,18-16AWG,SIZE 16
DWG NO: SP16M2XX
REV: A1
SH: 1
OF: 1