<1 Ω CMOS, 1.8 V to 5.5 V, Dual SPST Switches

ADG821/ADG822/ADG823

FEATURES

0.8 Ω maximum on resistance @ 125°C
0.3 Ω maximum on resistance flatness @ 125°C
1.8 V to 5.5 V single supply
200 mA current carrying capability
Automotive temperature range: −40°C to +125°C
Rail-to-rail operation
8-lead MSOP
33 ns switching times
Typical power consumption: <0.01 µW
TTL-/CMOS-compatible inputs
Pin-compatible with the ADG721/ADG722/ADG723

APPLICATIONS

Power routing
Battery-powered systems
Communication systems
Data acquisition systems
Audio and video signal routing
Cellular phones
Modems
PCMCIA cards
Hard drives
Relay replacement

FUNCTIONAL BLOCK DIAGRAMS

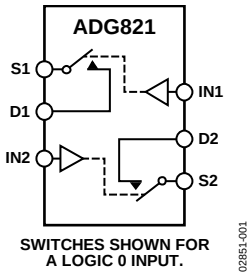

Figure 1.

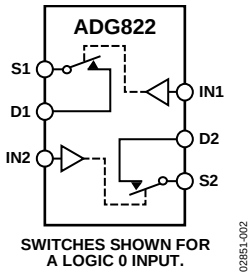

Figure 2.

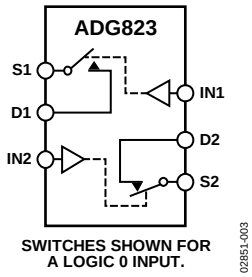

Figure 3.

GENERAL DESCRIPTION

The ADG821/ADG822/ADG823 are monolithic CMOS single-pole, single-throw (SPST) switches. These switches are designed on an advanced submicron process that provides low power dissipation, yet gives high switching speed, low on resistance, and low leakage currents.

The ADG821/ADG822/ADG823 are designed to operate from a single 1.8 V to 5.5 V supply, making them ideal for use in battery-powered instruments.

Each switch of the ADG821/ADG822/ADG823 conducts equally well in both directions when on. The ADG821/ADG822/ADG823 contain two independent SPST switches. The ADG821 and ADG822 differ only in that both switches are normally open and normally closed, respectively. In the ADG823, Switch 1 is normally open and Switch 2 is normally closed. The ADG823 exhibits break-before-make switching action.

The ADG821/ADG822/ADG823 are available in an 8-lead MSOP.

PRODUCT HIGHLIGHTS

1. Very Low On Resistance: 0.5 Ω typ.
2. On Resistance Flatness ($R_{FLAT(ON)}$): 0.15 Ω typ.
3. Automotive Temperature Range: −40°C to +125°C.
4. Current Carrying Capability: 200 mA.
5. Low Power Dissipation. CMOS construction ensures low power dissipation.
6. 8-Lead MSOP.

Rev. A
Information furnished by Analog Devices is believed to be accurate and reliable. However, no responsibility is assumed by Analog Devices for its use, nor for any infringements of patents or other rights of third parties that may result from its use. Specifications subject to change without notice. No license is granted by implication or otherwise under any patent or patent rights of Analog Devices. Trademarks and registered trademarks are the property of their respective owners.

One Technology Way, P.O. Box 9106, Norwood, MA 02062-9106, U.S.A.
Tel: 781.329.4700 **www.analog.com**
Fax: 781.461.3113 **©2002–2008 Analog Devices, Inc. All rights reserved.**

TABLE OF CONTENTS

Features ... 1
Applications ... 1
Functional Block Diagrams ... 1
General Description ... 1
Product Highlights ... 1
Revision History ... 2
Specifications ... 3
Absolute Maximum Ratings ... 5
ESD Caution ... 5
Pin Configuration and Function Descriptions ... 6
Typical Performance Characteristics ... 7
Test Circuits ... 9
Terminology ... 11
Outline Dimensions ... 12
Ordering Guide ... 12

REVISION HISTORY

4/08—Rev. 0 to Rev. A

Updated Format ... Universal
Added Table 6 ... 6
Updated Outline Dimensions ... 12
Changes to Ordering Guide ... 12

8/02—Revision 0: Initial Version

SPECIFICATIONS

V_{DD} = 5 V ± 10%, GND = 0 V; T_A = −40°C to +125°C, unless otherwise noted.

Table 1.

Parameter	25°C	−40°C to +85°C	−40°C to +125°C[1]	Unit	Test Conditions/Comments
ANALOG SWITCH					
Analog Signal Range			0 V to V_{DD}	V	
On Resistance (R_{ON})	0.5			Ω typ	V_S = 0 V to V_{DD}, I_S = 100 mA, see Figure 17
	0.6	0.7	0.8	Ω max	
On Resistance Match Between	0.16			Ω typ	V_S = 0 V to V_{DD}, I_S = 100 mA
Channels (ΔR_{ON})	0.2	0.25	0.28	Ω max	
On Resistance Flatness ($R_{FLAT(ON)}$)	0.15			Ω typ	V_S = 0 V to V_{DD}, I_S = 100 mA
	0.23	0.26	0.3	Ω max	
LEAKAGE CURRENTS					V_{DD} = 5.5 V
Source Off Leakage, I_S (Off)	±0.01			nA typ	V_S = 4.5 V/1 V, V_D = 1 V/4.5 V, see Figure 18
	±0.25	±3	±25	nA max	
Drain Off Leakage, I_D (Off)	±0.01			nA typ	V_S = 4.5 V/1 V, V_D = 1 V/4.5 V, see Figure 18
	±0.25	±3	±25	nA max	
Channel On Leakage, I_D, I_S (On)	±0.01			nA typ	V_S = V_D = 1 V, or V_S = V_D = 4.5 V, see Figure 19
	±0.25	±3	±25	nA max	
DIGITAL INPUTS					
Input High Voltage, V_{INH}			2.0	V min	
Input Low Voltage, V_{INL}			0.8	V max	
Input Current					
I_{INL} or I_{INH}	0.005			µA typ	V_{IN} = V_{INL} or V_{INH}
			±0.1	µA max	
Digital Input Capacitance, C_{IN}	4			pF typ	
DYNAMIC CHARACTERISTICS[2]					
t_{ON}	33			ns typ	R_L = 50 Ω, C_L = 35 pF, V_S = 3 V, see Figure 20
	45	48	52	ns max	
t_{OFF}	11			ns typ	R_L = 50 Ω, C_L = 35 pF, V_S = 3 V, see Figure 20
	16	19	21	ns max	
Break-Before-Make Time Delay, t_{BBM}	32			ns typ	R_L = 50 Ω, C_L = 35 pF, V_{S1} = V_{S2} = 3 V,
(ADG823 Only)			1	ns min	see Figure 21
Charge Injection	15			pC typ	V_S = 2.5 V; R_S = 0 Ω, C_L = 1 nF, see Figure 22
Off Isolation	−52			dB typ	R_L = 50 Ω, C_L = 5 pF, f = 1 MHz, see Figure 23
Channel-to-Channel Crosstalk	−82			dB typ	R_L = 50 Ω, C_L = 5 pF, f = 1 MHz, see Figure 24
Bandwidth −3 dB	24			MHz typ	R_L = 50 Ω, C_L = 5 pF, see Figure 25
C_S (Off)	85			pF typ	f = 1 MHz
C_D (Off)	98			pF typ	f = 1 MHz
C_D, C_S (On)	230			pF typ	f = 1 MHz
POWER REQUIREMENTS					V_{DD} = 5.5 V, digital inputs = 0 V or 5.5 V
I_{DD}	0.001			µA typ	
		1.0	2.0	µA max	

[1] On resistance parameters tested with I_S = 10 mA.
[2] Guaranteed by design, not subject to production test.

V_{DD} = 2.7 V to 3.6 V, GND = 0 V, T_A = −40°C to +125°C, unless otherwise noted.

Table 2.

Parameter	25°C	−40°C to +85°C	−40°C to +125°C[1]	Unit	Test Conditions/Comments
ANALOG SWITCH					
Analog Signal Range			0 V to V_{DD}	V	
On Resistance (R_{ON})	0.7			Ω typ	V_S = 0 V to V_{DD}, I_S = 100 mA, see Figure 17
	1.4	1.5	1.6	Ω max	
On Resistance Match Between	0.16			Ω typ	V_S = 0 V to V_{DD}, I_S = 100 mA
Channels (ΔR_{ON})	0.2	0.25	0.28	Ω max	
On Resistance Flatness ($R_{FLAT(ON)}$)	0.3		0.33	Ω typ	V_S = 0 V to V_{DD}, I_S = 100 mA
LEAKAGE CURRENTS					V_{DD} = 3.6 V
Source Off Leakage, I_S (Off)	±0.01			nA typ	V_S = 3.3 V/1 V, V_D = 1 V/3.3 V, see Figure 18
	±0.25	±3	±15	nA max	
Drain Off Leakage, I_D (Off)	±0.01			nA typ	V_S = 3.3 V/1 V, V_D = 1 V/3.3 V, see Figure 18
	±0.25	±3	±25	nA max	
Channel On Leakage, I_D, I_S (On)	±0.01			nA typ	V_S = V_D = 1 V, or 3.3 V, see Figure 19
	±0.25	±3	±25	nA max	
DIGITAL INPUTS					
Input High Voltage, V_{INH}			2.0	V min	
Input Low Voltage, V_{INL}			0.8	V max	
Input Current					
I_{INL} or I_{INH}	0.005			µA typ	V_{IN} = V_{INL} or V_{INH}
			±0.1	µA max	
Digital Input Capacitance, C_{IN}	4			pF typ	
DYNAMIC CHARACTERISTICS[2]					
t_{ON}	48			ns typ	R_L = 50 Ω, C_L = 35 pF, V_S = 1.5 V, see Figure 20
	67	74	78	ns max	
t_{OFF}	12			ns typ	R_L = 50 Ω, C_L = 35 pF, V_S = 1.5 V, see Figure 20
	18	20	23	ns max	
Break-Before-Make Time Delay, t_{BBM}	40			ns typ	R_L = 50 Ω, C_L = 35 pF, V_{S1} = V_{S2} = 1.5 V,
(ADG823 Only)			1	ns min	see Figure 21
Charge Injection	±2			pC typ	V_S = 1.5 V; R_S = 0 Ω, C_L = 1 nF, see Figure 22
Off Isolation	−52			dB typ	R_L = 50 Ω, C_L = 5 pF, f = 1 MHz, see Figure 23
Channel-to-Channel Crosstalk	−82			dB typ	R_L = 50 Ω, C_L = 5 pF, f = 1 MHz, see Figure 24
Bandwidth −3 dB	24			MHz typ	R_L = 50 Ω, C_L = 5 pF, see Figure 25
C_S (Off)	85			pF typ	f = 1 MHz
C_D (Off)	98			pF typ	f = 1 MHz
C_D, C_S (On)	230			pF typ	f = 1 MHz
POWER REQUIREMENTS					V_{DD} = 3.6 V, digital inputs = 0 V or 3.6 V
I_{DD}	0.001			µA typ	
		1.0	2.0	µA max	

[1] On resistance parameters tested with I_S = 10 mA.
[2] Guaranteed by design, not subject to production test.

ABSOLUTE MAXIMUM RATINGS

T_A = 25°C, unless otherwise noted.

Table 3.

Parameter	Rating
V_{DD} to GND	−0.3 V to +7 V
Analog Inputs[1]	−0.3 V to V_{DD} + 0.3 V or 30 mA, whichever occurs first
Digital Inputs[1]	−0.3 V to V_{DD} + 0.3 V or 30 mA, whichever occurs first
Peak Current, S or D	400 mA (pulsed at 1 ms, 10% duty cycle maximum)
Continuous Current, S or D	200 mA
Operating Temperature Range	
Automotive	−40°C to +125°C
Storage Temperature Range	−65°C to +150°C
Junction Temperature (T_J max)	150°C
Package Power Dissipation	(T_J max − T_A)/θ_{JA}
8-Lead MSOP Thermal Impedance	
θ_{JA}	206°C/W
θ_{JC}	44°C/W
Lead Temperature, Soldering (10 sec)	300°C
IR Reflow, Peak Temperature (<20 sec)	235°C

[1] Overvoltages at IN, S, or D are clamped by internal diodes. Current should be limited to the maximum ratings given.

Stresses above those listed under Absolute Maximum Ratings may cause permanent damage to the device. This is a stress rating only; functional operation of the device at these or any other conditions above those indicated in the operational section of this specification is not implied. Exposure to absolute maximum rating conditions for extended periods may affect device reliability.

Table 4. Truth Table for the ADG821/ADG822

ADG821 INx	ADG822 INx	Switch x Condition
0	1	Off
1	0	On

Table 5. Truth Table for the ADG823

IN1	IN2	Switch S1	Switch S2
0	0	Off	On
0	1	Off	Off
1	0	On	On
1	1	On	Off

ESD CAUTION

ESD (electrostatic discharge) sensitive device. Charged devices and circuit boards can discharge without detection. Although this product features patented or proprietary protection circuitry, damage may occur on devices subjected to high energy ESD. Therefore, proper ESD precautions should be taken to avoid performance degradation or loss of functionality.

PIN CONFIGURATION AND FUNCTION DESCRIPTIONS

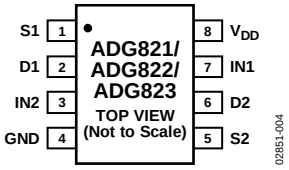

Figure 4. Pin Configuration

Table 6. Pin Function Descriptions

Pin No.	Mnemonic	Description
1	S1	Source Terminal. This pin can be an input or output.
2	D1	Drain Terminal. This pin can be an input or output.
3	IN2	Logic Control Input.
4	GND	Ground (0 V) Reference.
5	S2	Source Terminal. This pin can be an input or output.
6	D2	Drain Terminal. This pin can be an input or output.
7	IN1	Logic Control Input.
8	V_{DD}	Most Positive Power Supply Potential.

TYPICAL PERFORMANCE CHARACTERISTICS

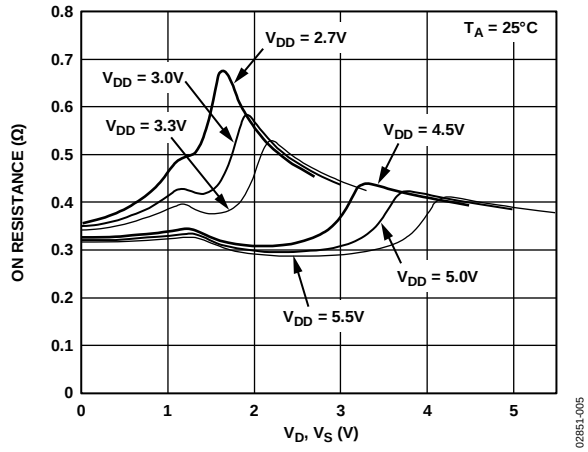

Figure 5. On Resistance vs. V_D, V_S

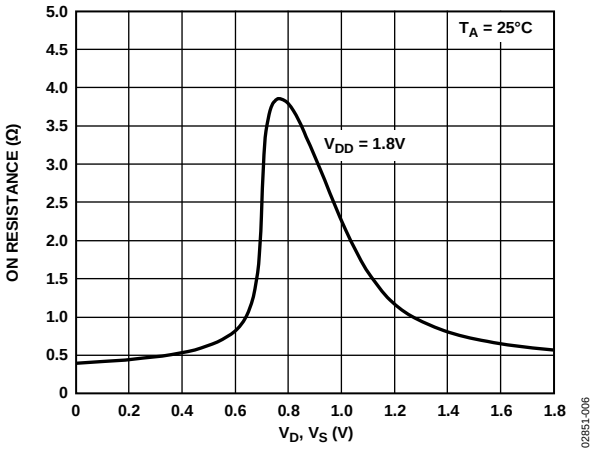

Figure 6. On Resistance vs. V_D, V_S; V_{DD} = 1.8 V

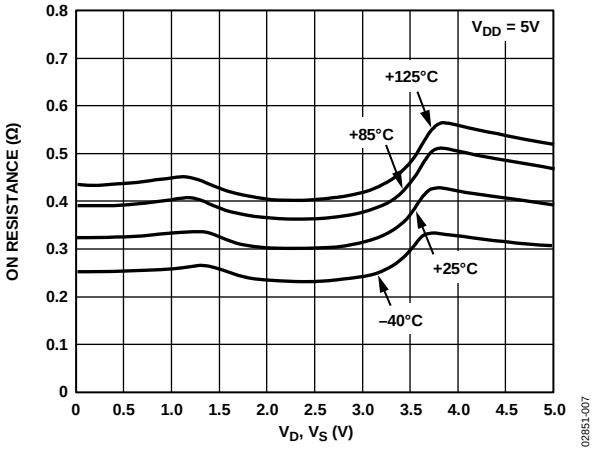

Figure 7. On Resistance vs. V_D, V_S for Different Temperatures, V_{DD} = 5 V

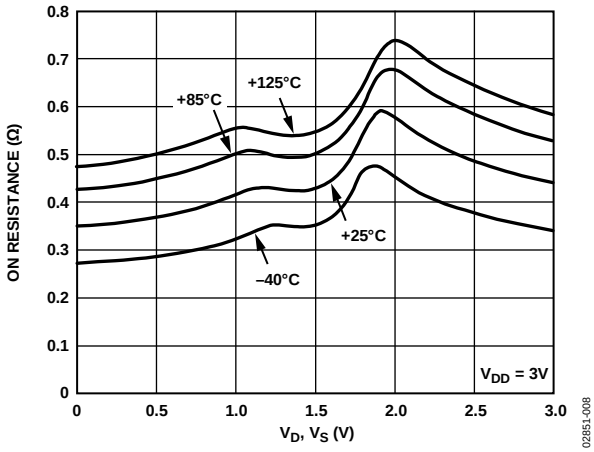

Figure 8. On Resistance vs. V_D, V_S for Different Temperatures, V_{DD} = 3 V

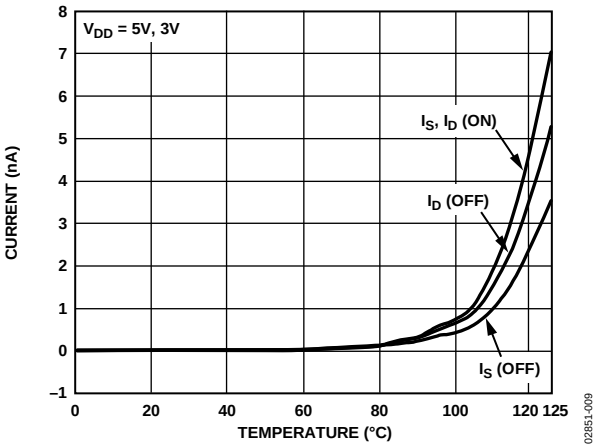

Figure 9. Leakage Current vs. Temperature

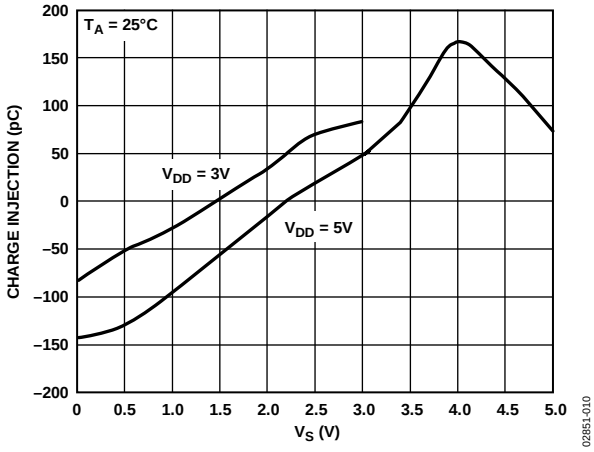

Figure 10. Charge Injection vs. Source Voltage

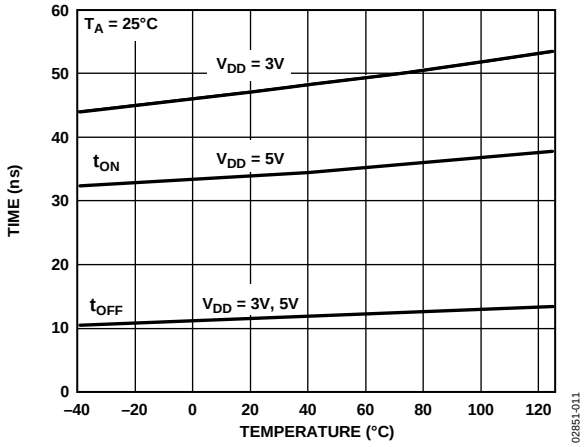

Figure 11. t_{ON}/t_{OFF} vs. Temperature

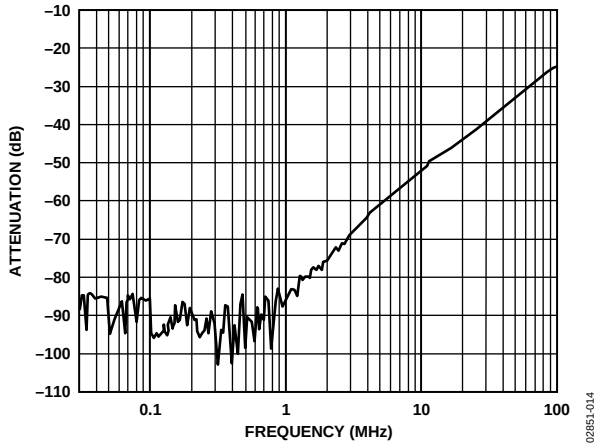

Figure 14. Crosstalk vs. Frequency

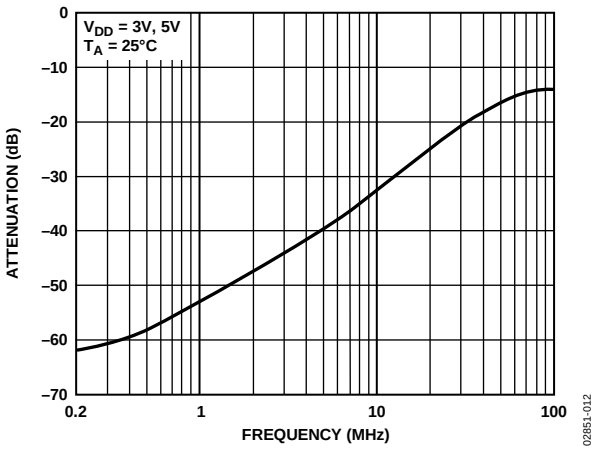

Figure 12. Off Isolation vs. Frequency

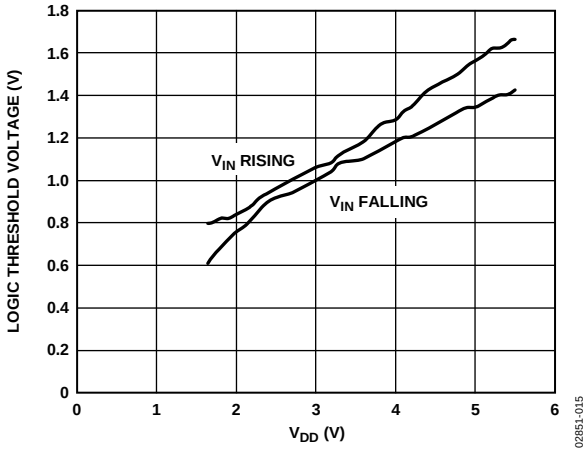

Figure 15. Logic Threshold Voltage vs. Supply Voltage

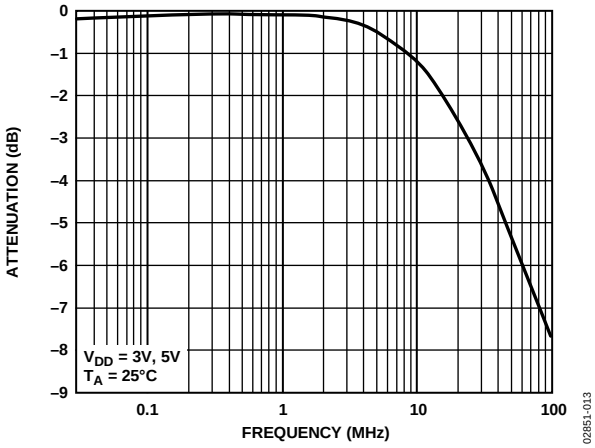

Figure 13. On Response vs. Frequency

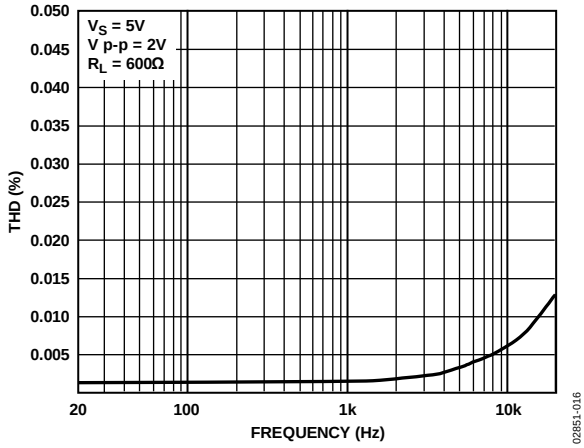

Figure 16. THD vs. Frequency

TEST CIRCUITS

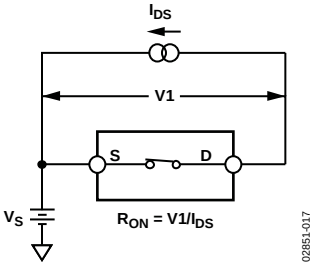

Figure 17. On Resistance

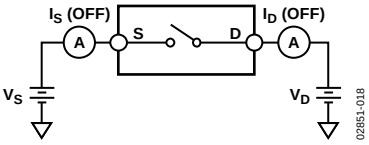

Figure 18. Off Leakage

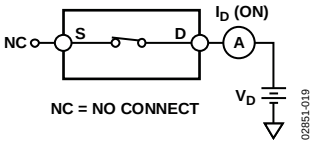

Figure 19. On Leakage

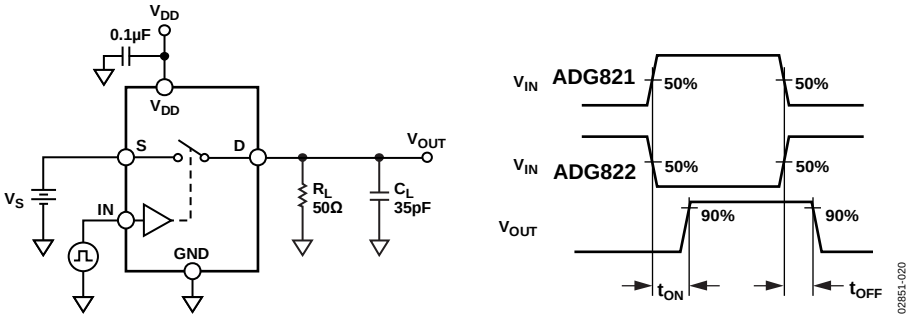

Figure 20. Switching Times

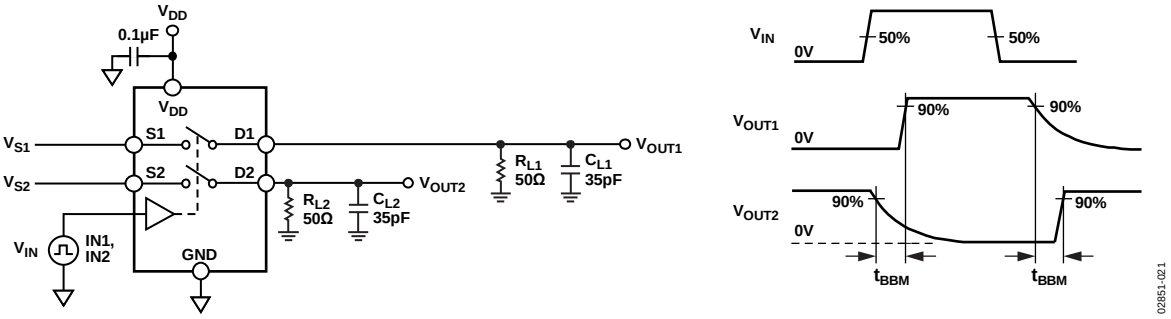

Figure 21. Break-Before-Make Time Delay, t_{BBM} (ADG823 only)

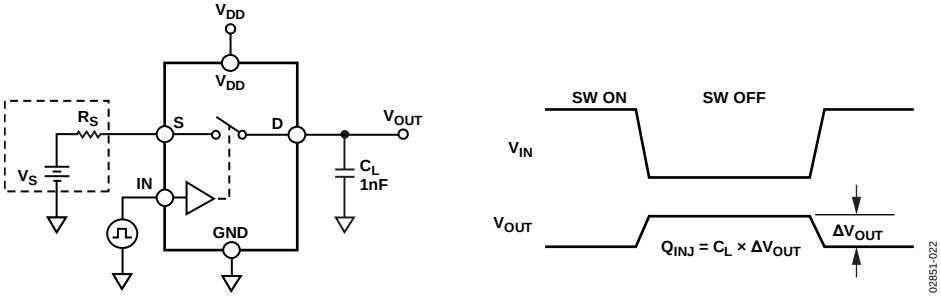

Figure 22. Charge Injection

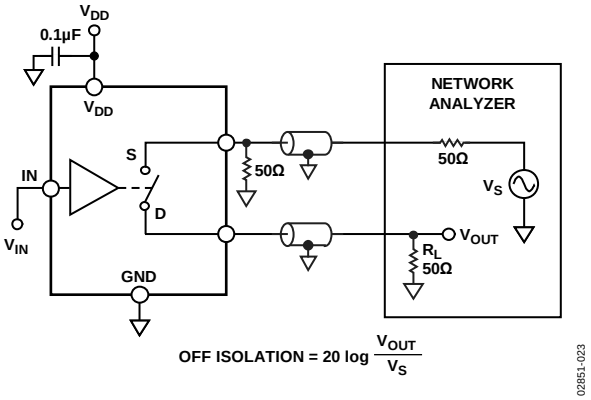

Figure 23. Off Isolation

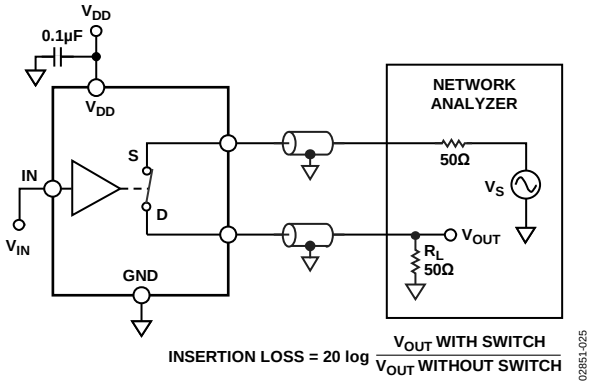

Figure 25. Bandwidth

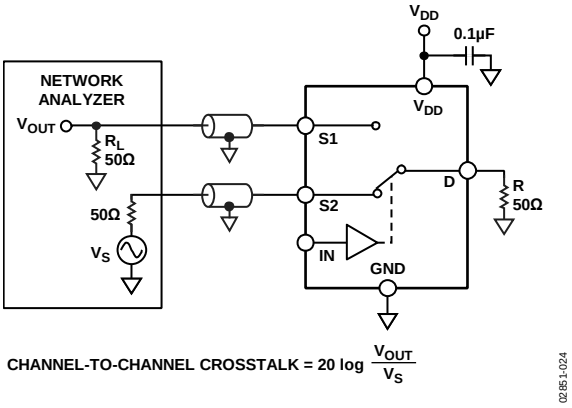

Figure 24. Channel-to-Channel Crosstalk

TERMINOLOGY

V_{DD}
Most positive power supply potential.

GND
Ground (0 V) reference.

I_{DD}
Positive supply current.

S
Source terminal. May be an input or output.

D
Drain terminal. May be an input or output.

IN
Logic control input.

R_{ON}
Ohmic resistance between Terminal D and Terminal S.

ΔR_{ON}
On resistance match between any two channels (that is, R_{ON} max − R_{ON} min).

$R_{FLAT(ON)}$
Flatness is defined as the difference between the maximum and minimum value of on resistance as measured over the specified analog signal range.

I_S (Off)
Source leakage current with the switch off.

I_D (Off)
Drain leakage current with the switch off.

I_D, I_S (On)
Channel leakage current with the switch on.

V_D, V_S
Analog voltage on Terminal D and Terminal S.

V_{INL}
Maximum input voltage for Logic 0.

V_{INH}
Minimum input voltage for Logic 1.

I_{INL} (I_{INH})
Input current of the digital input.

C_S (Off)
Off switch source capacitance.

C_D (Off)
Off switch drain capacitance.

C_D, C_S (On)
On switch capacitance.

t_{ON}
Delay between applying the digital control input and the output switching on.

t_{OFF}
Delay between applying the digital control input and the output switching off.

t_{BBM}
Off time or on time measured between the 90% points of both switches, when switching from one address state to another.

Charge Injection
Charge injection is a measure of the glitch impulse transferred from the digital input to the analog output during switching.

Crosstalk
Crosstalk is a measure of unwanted signal that is coupled through from one channel to another as a result of parasitic capacitance.

Off Isolation
A measure of unwanted signal coupling through an off switch.

Bandwidth
The frequency at which the output is attenuated by −3 dBs.

On Response
The frequency response of the on switch.

Insertion Loss
The loss due to the on resistance of the switch.

OUTLINE DIMENSIONS

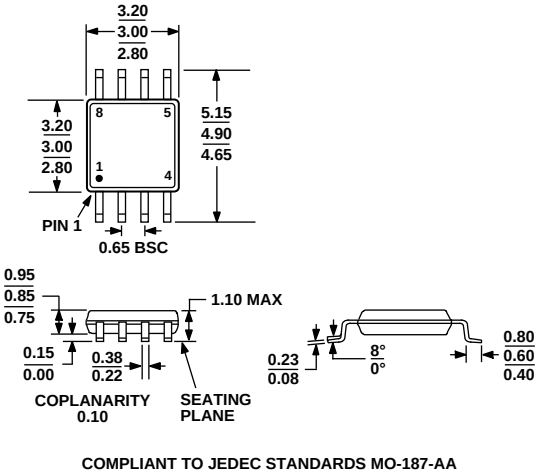

Figure 26. 8-Lead Mini Small Outline Package [MSOP] (RM-8)
Dimensions shown in millimeters

ORDERING GUIDE

Model	Temperature Range	Package Description	Package Option	Branding
ADG821BRM	−40°C to +125°C	8-Lead Mini Small Outline Package [MSOP]	RM-8	SQB
ADG821BRM-REEL	−40°C to +125°C	8-Lead Mini Small Outline Package [MSOP]	RM-8	SQB
ADG821BRMZ[1]	−40°C to +125°C	8-Lead Mini Small Outline Package [MSOP]	RM-8	S0P
ADG821BRMZ-REEL7[1]	−40°C to +125°C	8-Lead Mini Small Outline Package [MSOP]	RM-8	S0P
ADG822BRM	−40°C to +125°C	8-Lead Mini Small Outline Package [MSOP]	RM-8	SRB
ADG822BRM-REEL	−40°C to +125°C	8-Lead Mini Small Outline Package [MSOP]	RM-8	SRB
ADG822BRM-REEL7	−40°C to +125°C	8-Lead Mini Small Outline Package [MSOP]	RM-8	SRB
ADG822BRMZ[1]	−40°C to +125°C	8-Lead Mini Small Outline Package [MSOP]	RM-8	S1J
ADG822BRMZ-REEL7[1]	−40°C to +125°C	8-Lead Mini Small Outline Package [MSOP]	RM-8	S1J
ADG823BRM	−40°C to +125°C	8-Lead Mini Small Outline Package [MSOP]	RM-8	SSB
ADG823BRM-REEL	−40°C to +125°C	8-Lead Mini Small Outline Package [MSOP]	RM-8	SSB
ADG823BRMZ[1]	−40°C to +125°C	8-Lead Mini Small Outline Package [MSOP]	RM-8	SSB#
ADG823BRMZ-REEL7[1]	−40°C to +125°C	8-Lead Mini Small Outline Package [MSOP]	RM-8	SSB#

[1] Z = RoHS Compliant Part, # denotes RoHS compliant product may be top or bottom marked.

©2002–2008 Analog Devices, Inc. All rights reserved. Trademarks and registered trademarks are the property of their respective owners.
D02851-0-4/08(A)