Type RR Series

Key Features

- Metal film technology
- Non-flammable
- High power in small package
- High stability, reliability and uniformity characteristics
- Good performance for pulse applications
- Defined interruption behavior (fusing time)
- Various forming styles

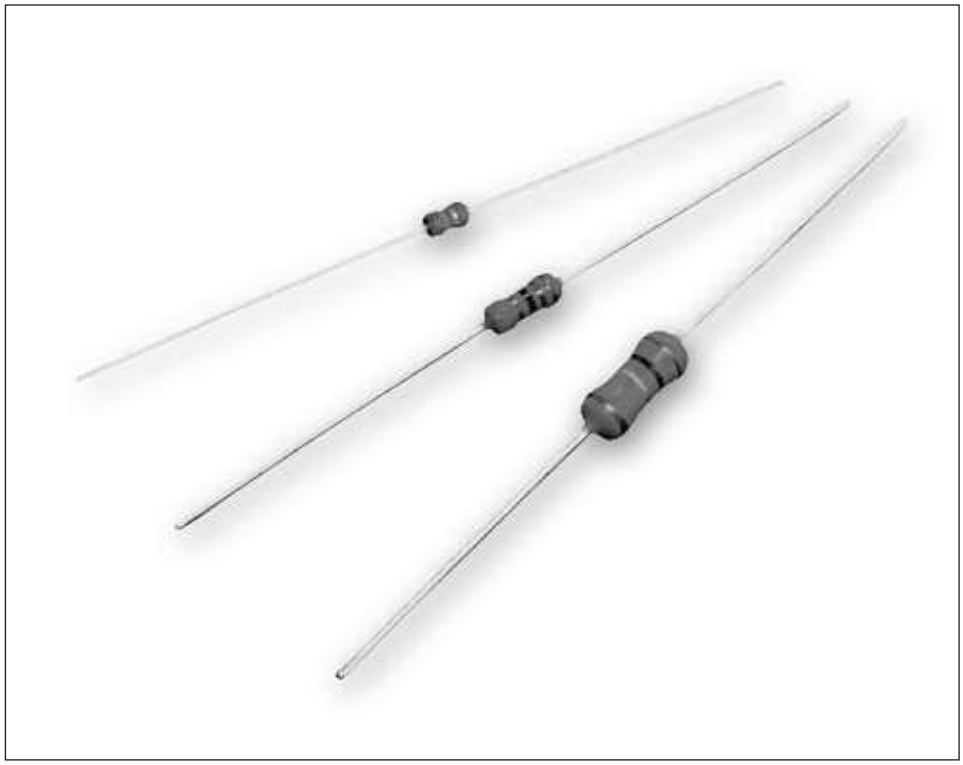

The RR Series is manufactured by depositing a homogeneous film of metal alloy onto a high-grade ceramic body. After a helical groove has been cut in the resistive layer, tinned connecting wires of electrolytic copper are welded to the end-caps. The resistors are coated with a red, non-flammable lacquer, which provides electrical, mechanical and climatic protection. The coating is resistant to all cleaning solvents in accordance with MIL-STD-202, method 215 and IEC 60068-2-45.

Characteristics - Electrical

	RR01		RR02		RR03	
Resistance Range:	0.22Ω-1MΩ	10R - 1M0	0.33Ω-1MΩ	10R - 1M0	0.33Ω-1MΩ	10R - 1M0
Tolerance and Series:	±5%, E24	±1%, E24/E96	±5%, E24	±1%, E24/E96	±5%, E24	±1%, E24/E96
Maximum Dissipation: at $T_{amb.}$ = 70°C	1W		2W		3W	
Thermal Resistance:	120k/W		80k/W		65k/W	
Limiting Voltage (DC or RMS):	350V		500V		750V	
Rated Voltage [1]:	P_n x R					
Temperature Coefficient:	±300ppm/°C					
Basic Specification:	IEC 60115-1 and 60115-4					
Climatic Category (IEC 60068):	55/155/56					

Stability ΔR/R Max. After:	For tolerance 5%	For tolerance 1%
Load	±5.0% +0.1Ω	±1.0% +0.1Ω
Climatic Tests	±3.0% +0.1Ω	±1.0% +0.1Ω
Resistance to Soldering Heat	±1.0% +0.05Ω	±0.5% +0.05Ω

[1] Maximum rated voltage is the limiting voltage

Dimensions are in millimeters and inches unless otherwise specified. Values in brackets are standard equivalents.

Dimensions are shown for reference purposes only. Specifications subject to change.

For email, phone or live chat, go to: **te.com/help**

Type RR Series

Dimensions

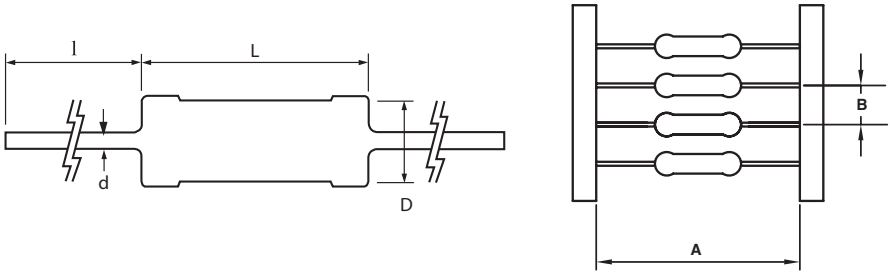

	A ±1	B	L ±1	øD ±0.5	ød ±0.1	l ±3
RR01	52	5 ±0.5	6.8	2.6	0.65	30
RR02	52	5 ±0.5	9.0	3.5	0.8	30
RR03	63	10 ±1	15.0	5.0	0.8	30

Mounting

The resistors are suitable for processing on automatic insertion equipment, cutting and bending machines.

Derating Curve

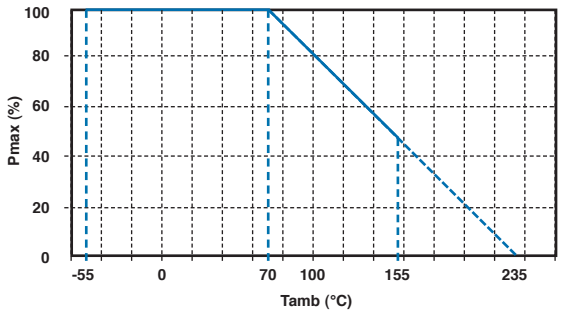

Maximum dissipation (Pmax) in percentage of rated power as a function of ambient temperature (Tamb)

Fusing Characteristics

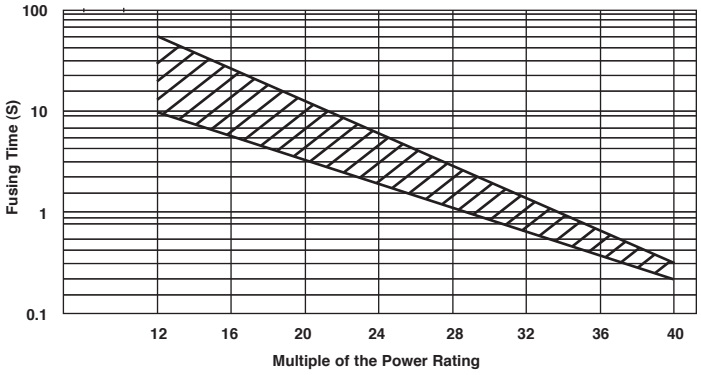

Dimensions are in millimeters and inches unless otherwise specified. Values in brackets are standard equivalents.

Dimensions are shown for reference purposes only. Specifications subject to change.

For email, phone or live chat, go to: **te.com/help**

Type RR Series

Pulse Characteristics - 1W

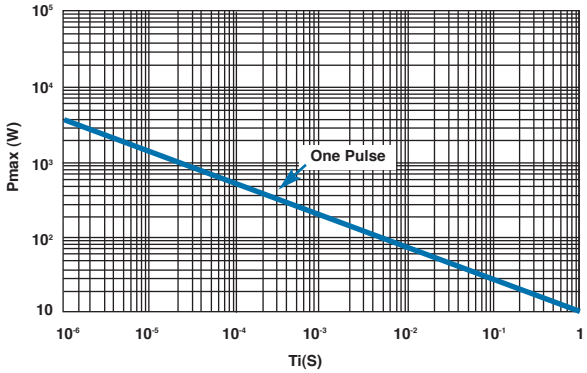

Maximum permissible peak pulse power (Pmax) as a function of pulse duration (Ti)

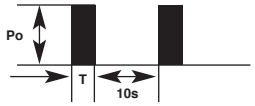

Condition Test: Resistance change ≤±5% with pulse 1000 cycles as like the figure (reference only).

1. Added power and added voltage are within the lower teritory of this graph.
2. Added in normal temperature and humidity.

2W

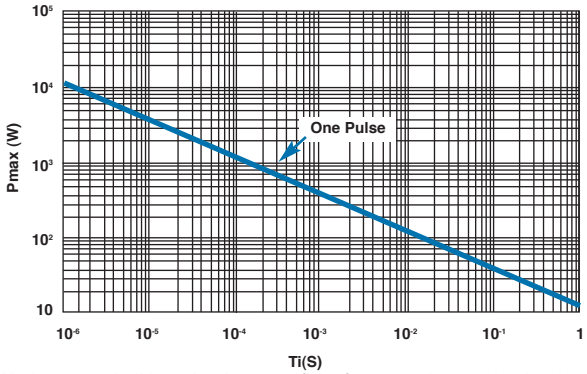

Maximum permissible peak pulse power (Pmax) as a function of pulse duration (Ti)

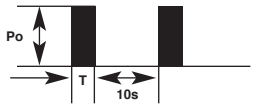

Condition Test: Resistance change ≤±5% with pulse 1000 cycles as like the figure (reference only).

1. Added power and added voltage are within the lower teritory of this graph.
2. Added in normal temperature and humidity.

3W

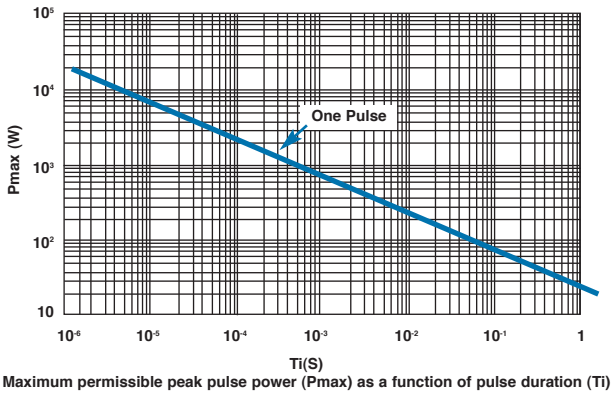

Maximum permissible peak pulse power (Pmax) as a function of pulse duration (Ti)

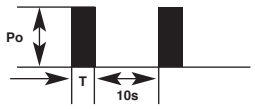

Condition Test: Resistance change ≤±5% with pulse 1000 cycles as like the figure (reference only).

1. Added power and added voltage are within the lower teritory of this graph.
2. Added in normal temperature and humidity.

Marking

The nominal resistance and tolerance are marked on the resistor using four or five coloured bands in accordance with IEC publication 60062 “Colour code for fixed resistors”. Standard values of nominal resistance are taken from the E24/E96 series for resistors with a tolerance of ±5% or ±1%. The values of the E24/E96 series are in accordance with IEC publication 60063.

Dimensions are in millimeters and inches unless otherwise specified. Values in brackets are standard equivalents.

Dimensions are shown for reference purposes only. Specifications subject to change.

For email, phone or live chat, go to: **te.com/help**

Type RR Series

Packaging - Ammo Pack Boxed

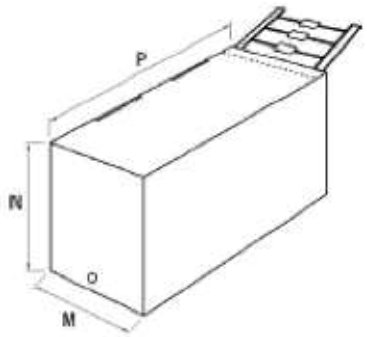

	M	N	P	Quantity
RR01	75	100	255	5000
RR02	75	55	255	1000
RR03	100	110	265	1000

Packaging - Tape and Reeled

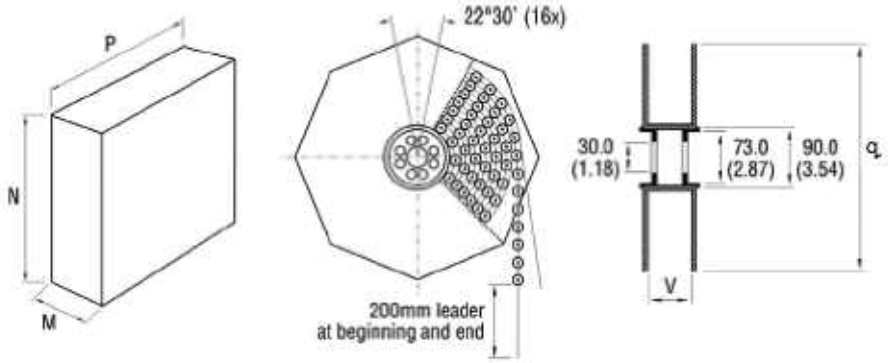

	Taping	M	N	P	q	V	Quantity pcs.
RR01	52 ±1.0	80	295	295	310	75	5000
RR02	52 ±1.0	80	295	295	310	75	2500
RR03	63 ±1.0	80	295	295	310	75	1000

How to Order

RR	01	J	1K0	TR
Common Part	**Power Rating**	**Tolerance**	**Value**	**Packaging**
RR - Power Resistor	01 - 1 Watt 02 - 2 Watts 03 - 3 Watts	J - 5% F - 1%	100 ohm (100 ohms) 100R 1K0 (1000 ohms) 1K0 100 K ohm (100,000 ohms) 100K	TR - Reeled TB - Ammo Pack

TE Connectivity and the TE connectivity (logo) are trademarks.
Other logos, product and Company names mentioned herein may be trademarks of their respective owners.

While TE has made every reasonable effort to ensure the accuracy of the information in this datasheet, TE does not guarantee that it is error-free, nor does TE make any other representation, warranty or guarantee that the information is accurate, correct, reliable or current. TE reserves the right to make any adjustments to the information contained herein at any time without notice. TE expressly disclaims all implied warranties regarding the information contained herein, including, but not limited to, any implied warranties of merchantability or fitness for a particular purpose. The dimensions in this datasheet are for reference purposes only and are subject to change without notice. Specifications are subject to change without notice. Consult TE for the latest dimensions and design specifications.