380-002
EMI/RFI Non-Environmental Backshell
with Strain Relief
Type A - Direct Coupling - Low Profile

CONNECTOR DESIGNATORS

A-B*-C-D-E-F
G-H-J-K-L-S

*** Conn. Desig. B See Note 5**

DIRECT COUPLING

380 F S 002 M 16 10 H 6

- Product Series
- Connector Designator
- Angle and Profile
  - A = 90°
  - B = 45°
  - S = Straight
- Basic Part No.
- Finish (Table II)
- Shell Size (Table I)
- Cable Entry (Tables X, XI)
- Strain Relief Style (H, A, M, D)
- Length: S only (1/2 inch increments: e.g. 6 = 3 inches)

TYPE A OVERALL SHIELD TERMINATION

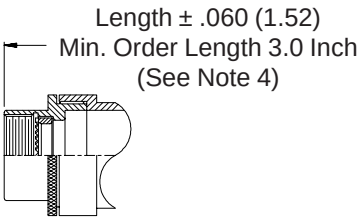

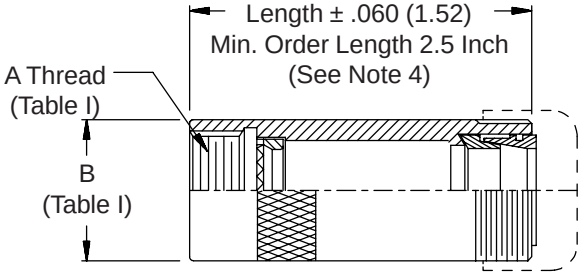

STYLE 2 (STRAIGHT See Note 1)

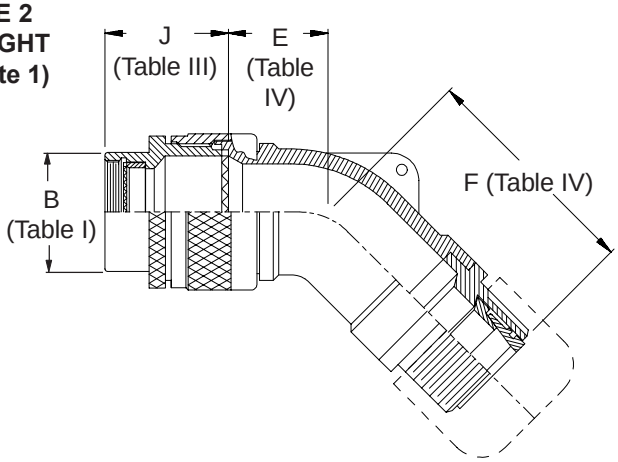

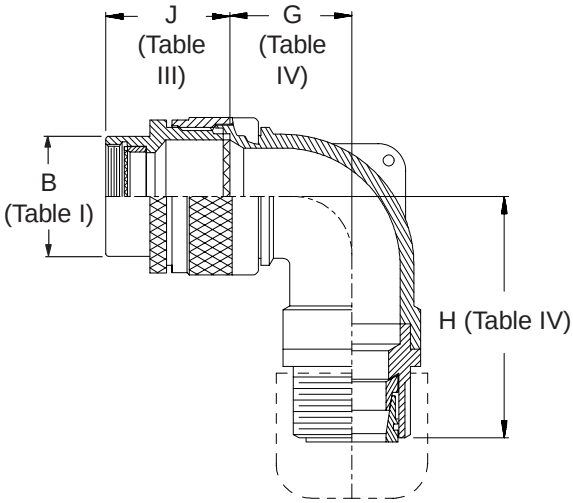

STYLE H
Heavy Duty
(Table X)

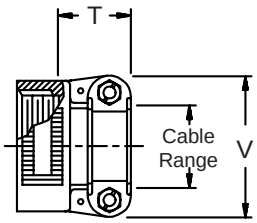

STYLE A
Medium Duty
(Table XI)

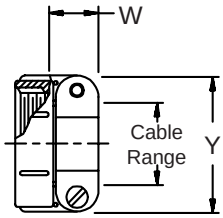

STYLE M
Medium Duty
(Table XI)

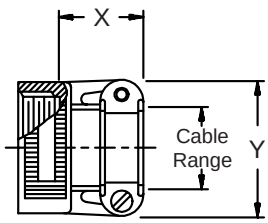

STYLE D
Medium Duty
(Table XI)

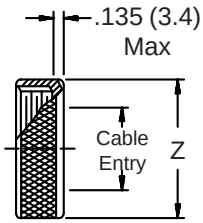

© 2005 Glenair, Inc.
CAGE Code 06324
Printed in U.S.A.

TABLE III: FRONT ADAPTER

Shell Size	J Max - Conn. Designator A-E-F J-H-L-S	D-B-G-K	C
08/09	1.180 (30.0)	1.440 (36.6)	
10/11	1.180 (30.0)	1.440 (36.6)	
12/13	1.180 (30.0)	1.440 (36.6)	1.735 (44.1)
14/15	1.180 (30.0)	1.440 (36.6)	1.915 (48.6)
16/17	1.380 (35.0)	1.560 (39.6)	1.915 (48.6)
18/19	1.380 (35.0)	1.560 (39.6)	1.915 (48.6)
20/21	1.380 (35.0)	1.560 (39.6)	1.915 (48.6)
22/23	1.380 (35.0)	1.560 (39.6)	1.915 (48.6)
24/25	1.380 (35.0)	1.560 (39.6)	1.915 (48.6)
28/29	1.610 (40.9)	1.560 (39.6)	1.915 (48.6)
32/33	1.610 (40.9)	1.750 (44.5)	1.915 (48.6)
36	1.610 (40.9)	1.750 (44.5)	1.915 (48.6)
40	1.610 (40.9)	2.190 (55.6)	1.915 (48.6)

See inside back cover fold-out or pages 13 and 14 for unabridged Tables I and II.

TABLE IV: ELBOW DIMENSIONS

Elbow Size	E Max	F Max	G Max	H Max
04	.567 (14.4)	1.187 (30.1)	.636 (16.2)	1.200 (30.5)
06	.630 (16.0)	1.250 (31.8)	.710 (18.0)	1.320 (33.5)
08	.692 (17.6)	1.312 (33.3)	.731 (18.6)	1.340 (34.0)
10	.755 (19.2)	1.655 (42.0)	.825 (21.0)	1.660 (42.2)
12	.848 (21.5)	1.765 (44.8)	.988 (25.1)	1.750 (44.5)
16	1.036 (26.3)	1.952 (49.6)	1.087 (27.6)	1.925 (48.9)
20	1.130 (28.7)	2.098 (53.3)	1.325 (33.7)	2.033 (51.6)
24	1.255 (31.9)	2.155 (54.7)	1.337 (34.0)	2.200 (55.9)
28	1.317 (33.5)	2.250 (57.2)	1.827 (46.4)	2.450 (62.2)
32	1.348 (34.2)	2.343 (59.5)	2.027 (51.5)	2.450 (62.2)

TABLE X: CABLE ENTRY

Dash No.	T Max	V Max	Cable Range Min	Cable Range Max
04	.780 (19.8)	.957 (24.3)	.125 (3.2)	.312 (7.9)
06	.780 (19.8)	1.145 (29.1)	.250 (6.4)	.437 (11.1)
08	.780 (19.8)	1.332 (33.8)	.312 (7.9)	.562 (14.3)
10	.780 (19.8)	1.332 (33.8)	.350 (8.9)	.625 (15.9)
12	.811 (20.6)	1.551 (39.4)	.500 (12.7)	.750 (19.1)
16	.905 (23.0)	1.770 (45.0)	.625 (15.9)	.937 (23.8)
20	1.092 (27.7)	2.113 (53.7)	.875 (22.2)	1.250 (31.8)
24	1.124 (28.5)	2.363 (60.0)	1.000 (25.4)	1.375 (34.9)
28	1.399 (35.5)	2.770 (70.4)	1.250 (31.8)	1.625 (41.3)
32	1.399 (35.5)	3.020 (76.7)	1.437 (36.5)	1.875 (47.6)

TABLE II: STANDARD FINISHES

GLENAIR SYMBOL	FINISH
B	Cadmium Plate, Olive Drab
M	Electroless Nickel
NF	Cadmium Plate, Olive Drab Over Electroless Nickel

See Inside Back Cover for Additional Finish Options

1. When maximum cable entry (page 22) is exceeded, Style 2 will be supplied. (Function S only.)
2. Metric dimensions (mm) are indicated in parentheses.
3. Cable range is defined as the accommodations range for the wire bundle or cable. Dimensions shown are not intended for inspection criteria.
4. Consult factory for shorter lengths on straight backshells.
5. Refer to pages 18 and 19 for connector designator B part number development.

TABLE XI: CABLE ENTRY

Dash No.	W Max	X Max	Y Max	Z Max	Cable Range Min **	Cable Range Max
03*	.437 (11.1)	.760 (19.3)	.843 (21.4)	.630 (16.0)	.156 (4.0)	.250 (6.4)
04*	.437 (11.1)	.760 (19.3)	.906 (23.0)	.755 (19.2)	.188 (4.8)	.312 (7.9)
06*	.500 (12.7)	.760 (19.3)	1.093 (27.8)	.942 (23.9)	.281 (7.1)	.438 (11.1)
08	.563 (14.3)	.760 (19.3)	1.187 (30.1)	1.067 (27.1)	.344 (8.7)	.562 (14.3)
10	.563 (14.3)	.760 (19.3)	1.281 (32.5)	1.192 (30.3)	.375 (9.5)	.625 (15.9)
12	.563 (14.3)	.760 (19.3)	1.500 (38.1)	1.380 (35.1)	.438 (11.1)	.750 (19.1)
16	.656 (16.7)	1.073 (27.3)	1.719 (43.7)	1.535 (39.0)	.562 (14.3)	.938 (23.8)
20	.656 (16.7)	1.323 (33.6)	2.062 (52.4)	1.848 (46.9)	.750 (19.1)	1.250 (31.8)
24	.656 (16.7)	1.323 (33.6)	2.312 (58.7)	2.255 (57.3)	.781 (19.8)	1.375 (34.9)
28	1.188 (30.2)	1.572 (39.9)	2.719 (69.1)	2.505 (63.6)	.969 (24.6)	1.625 (41.3)
32*	1.187 (30.1)	1.572 (39.9)	2.969 (75.4)	2.755 (70.0)	1.125 (28.6)	1.875 (47.6)
40*	1.125 (28.6)	1.572 (39.9)	3.531 (89.7)	3.255 (82.7)	1.469 (37.3)	2.375 (60.3)

* Not available in Style M clamp. ** Not Applicable Style D

© 2005 Glenair, Inc. CAGE Code 06324 Printed in U.S.A.