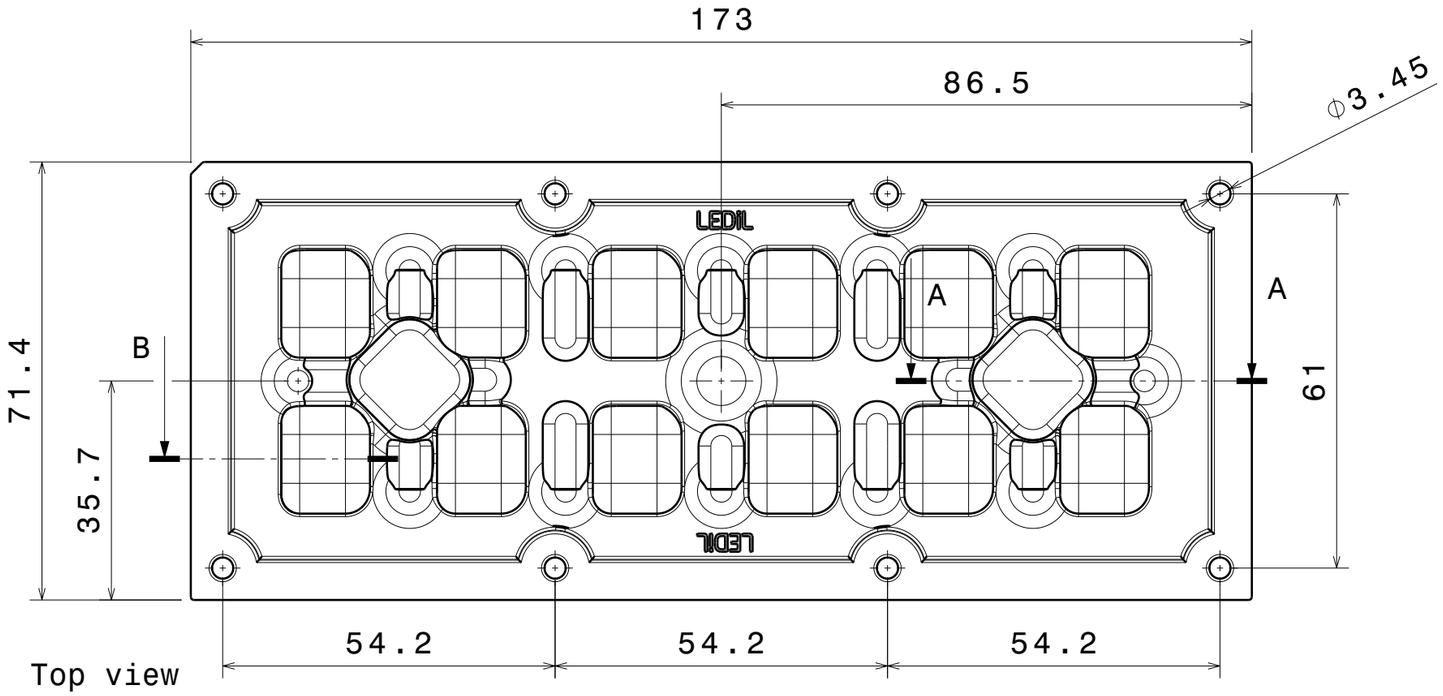

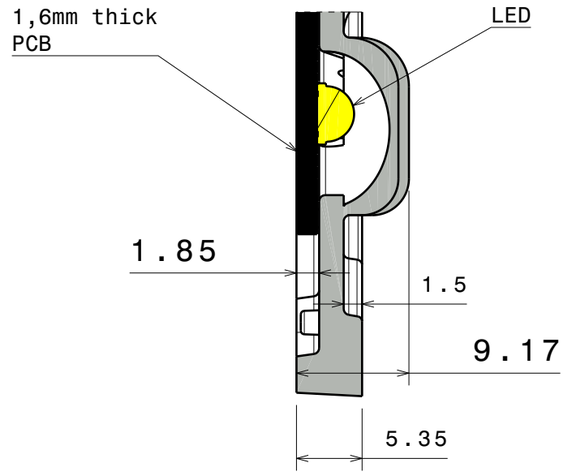

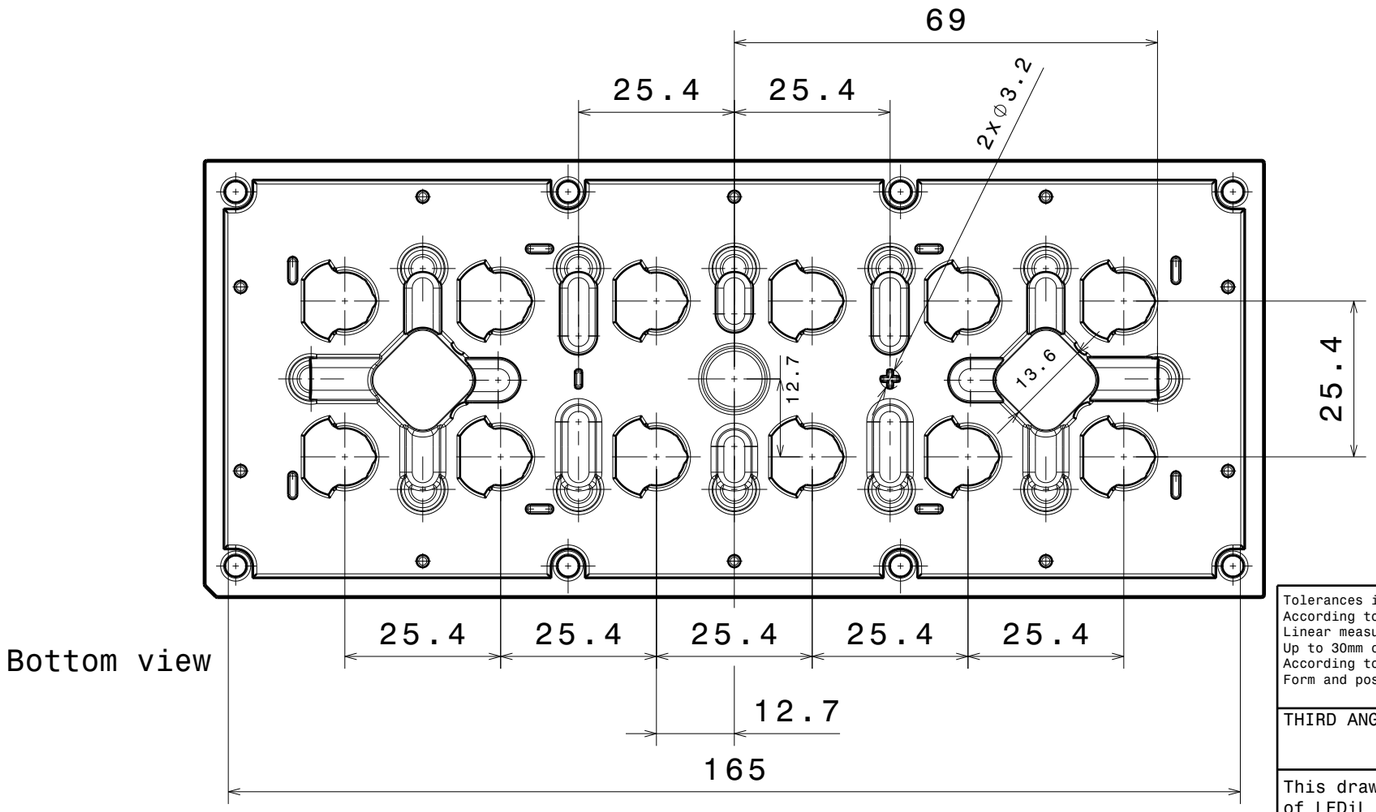

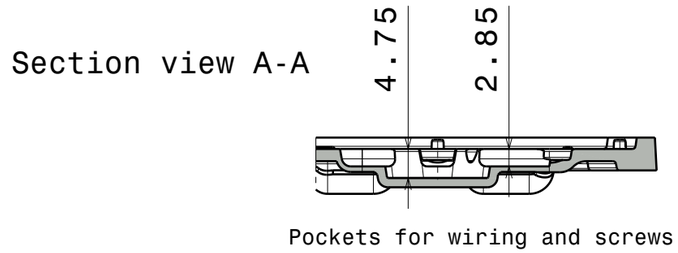

INDEX	PART NO	DESCRIPTION	MATERIAL	COLOUR
1	C13363	STRADA-IP-2X6-T2	PMMA	clear

Tolerances if not otherwise shown
According to DIN ISO 2768-1
Linear measures:
Up to 30mm class M, otherwise class C.
According to DIN ISO 2768-2
Form and position: class L

THIRD ANGLE PROJECTION:

This drawing is the property of LEDiL Oy. It may not be reproduced, copied or communicated without a written agreement with LEDiL Oy.

Ledil Oy
Salorankatu 10
FIN 24240 SALO
Finland

DRAWING TITLE
C13363_STRADA-IP-2X6-T2

SIZE A3

PART NUMBER C13363

SCALE 1:1 | WEIGHT 51,1 g | SHEET 1/1