MICRO SWITCH
A DIVISION OF HONEYWELL
FREEPORT, ILLINOIS
FED. MFR. CODE 91929

SWITCH - ENCLOSED

CATALOG LISTING
51ML7

THIS DRAWING COVERS A PROPRIETARY ITEM AND IS THE PROPERTY OF MICRO SWITCH, A DIVISION OF HONEYWELL. THIS DRAWING IS NOT TO BE COPIED OR USED WITHOUT THE APPROVAL OF MICRO SWITCH

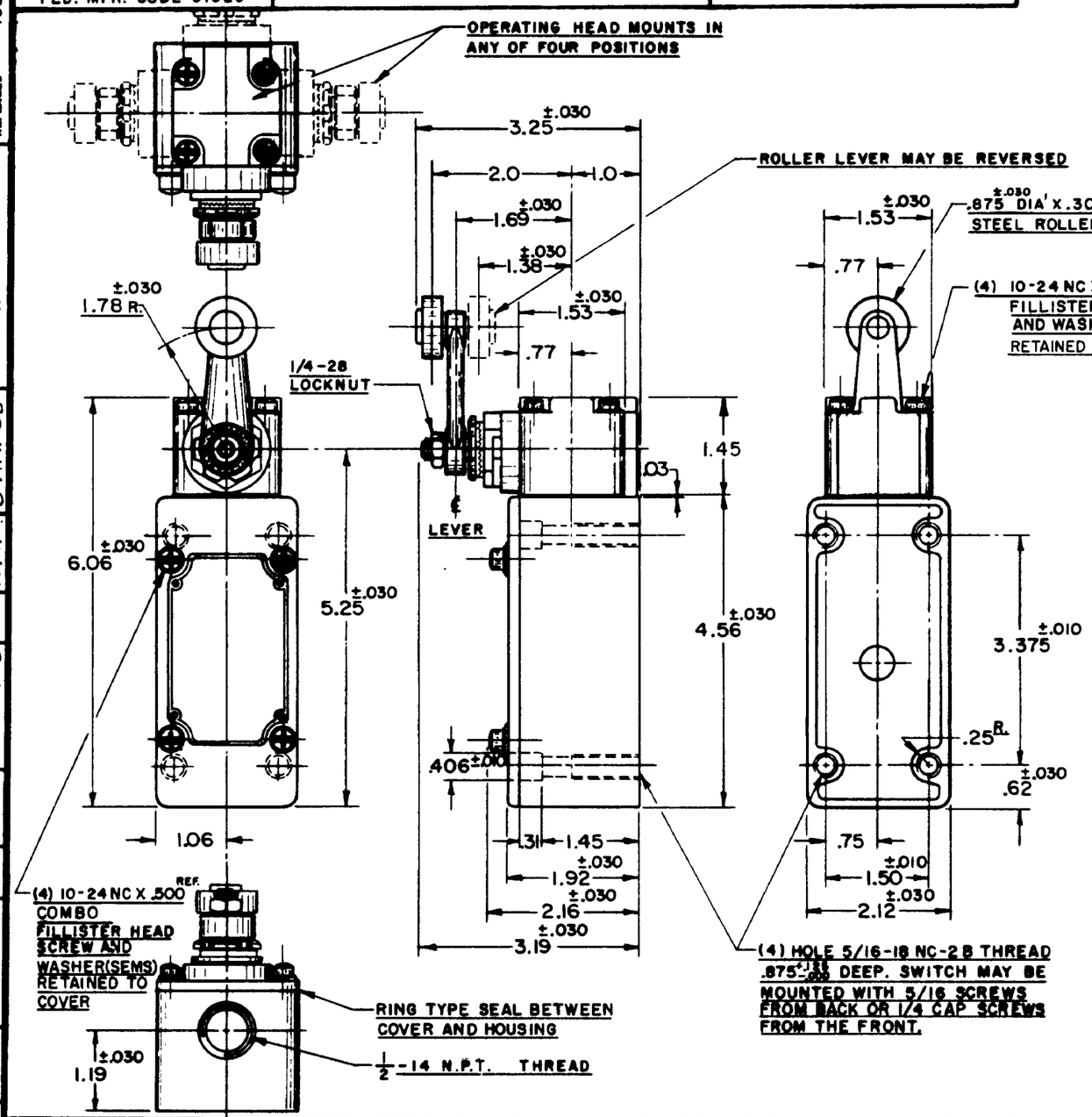

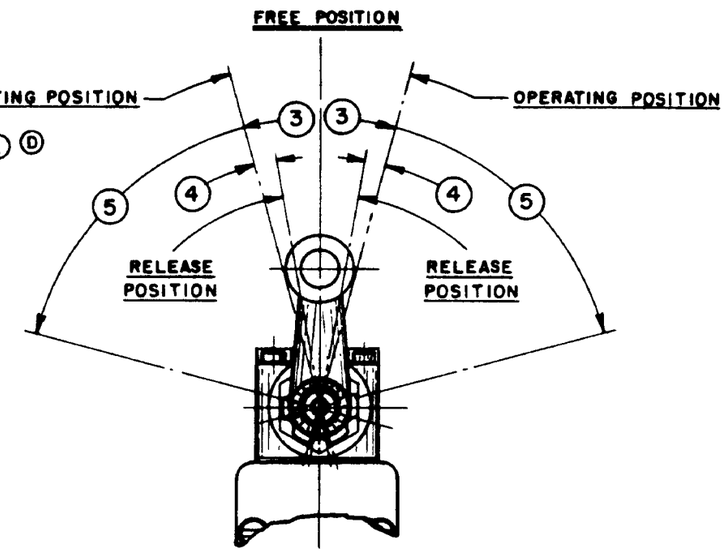

NOTES

1 - IT IS ESSENTIAL TO PREVENT ENTRANCE OF HARMFUL AGENTS THRU THE CONDUIT OPENING TO OBTAIN THE FULL BENEFIT OF THE SEALED CONSTRUCTION PROVIDED IN THIS UNIT

△2 SWITCH IS ASSEMBLED FOR ACTUATION IN EITHER DIRECTION

3 - LEVER MAY BE POSITIVELY LOCKED AT INTERVALS OF APPROX 0.4° (870 POSITIONS)

4 - LEVER MAY BE ADJUSTED TO ACTUATE THE SWITCH IN THE CLOCKWISE DIRECTION ONLY, THE COUNTER-CLOCKWISE DIRECTION ONLY, OR IN BOTH DIRECTIONS △2△5

△5 TO CONVERT SWITCH FOR ACTUATION IN EITHER CLOCKWISE OR COUNTER-CLOCKWISE DIRECTION ONLY, REMOVE THE HEAD AND SLIDE THE CAM TOWARD THE REAR OF THE HEAD SUFFICIENTLY TO DISENGAGE FROM THE FLATS ON THE SHAFT. ROTATE THE CAM 90° IN THE OPPOSITE DIRECTION OF THE ACTUATION DESIRED AND RE-ENGAGE THE CAM WITH THE FLATS ON THE SHAFT

△6 - BASIC SWITCHING ELEMENT LISTED BY UNDERWRITERS LABORATORIES INC.

CHARACTERISTICS

OPERATING FORCE	3 LBS. MAX.
FULL OVERTRAVEL FORCE	4 LBS. MAX.
RELEASE FORCE	1/4 LB. MIN.
PRETRAVEL (3)	20° MAX.
DIFFERENTIAL TRAVEL (4)	15° MAX.
OVERTRAVEL (5)	50° MIN.

SWITCH-BASIC REPLACEMENT — DT-2R711-A7

ELECTRICAL DATA

CONTACT ARRANGEMENT
D. P. D. T.

△6 10 A-125 OR 250 VAC
0.3 A-125 VDC, 0.15 A-250 VDC

SCALE 1/2 TO 1

DO NOT SCALE PRINT

UNLESS OTHERWISE SPECIFIED
DIMENSIONS ARE IN INCHES
TOLERANCES ARE:

ONE PLACE	(.0)	±.030
TWO PLACE	(.00)	±.015
THREE PLACE	(.000)	±.005
ANGLES		±2

WEIGHT

(M) 51ML7 ISSUE 3	REPLACES		
51ML7	RELEASE NO.		
M	DRAWING NUMBER	8 APR 58	
ISSUE	K	M	13
	K.F.M.	CHECK	
REVISIONS			
A	C011247	O.M.W. 12 MAR 58	10 APR 58
B	C013487	M B F 10 MAR 59	JWM
C	C014233	M B F 30 DEC 59	
D	C018841	H B W 20 JAN 65	CHECK
E	C020578	M B F 30 NOV 65	14 APR 58
F	C028121	S R H 9 NOV 70	
G	C052194	G J W 23 SEP 83	GCN
H	C055051-B	J A P 14 DEC 84	
J	C058909	TSK 23 JAN 86	CHECK
K	C074287	G J W 16 APR 93	58
DRAWN	O.M.W.	12 MAR	58
FC-80378.003			