PRODUCT NO.	ROWS	POWER			SIGNAL				POWER			
		E1	P1	P2	P3	1	2	3	4	P4	P5	P6	E2
51939-893__ NOTE 3	D C B A	PA	PA	PA	U T F E	H G F E	H G F E	H G F E		PA	PA	PA	

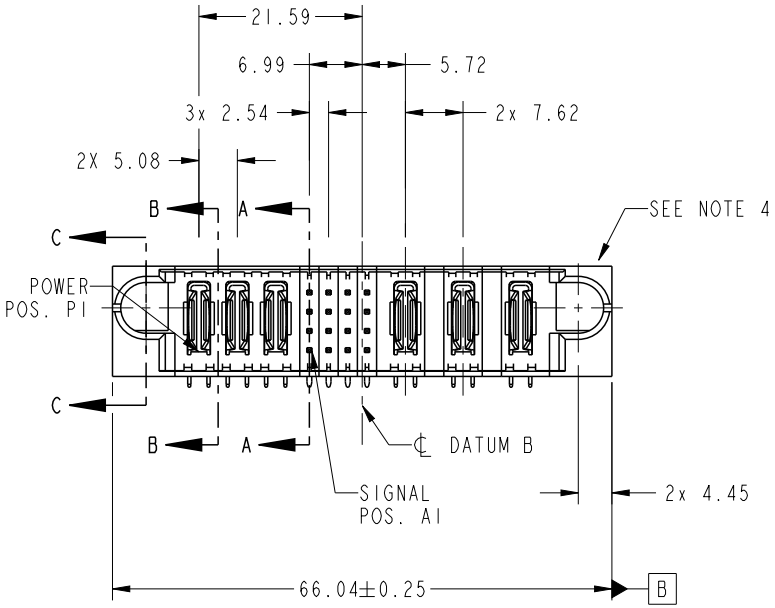

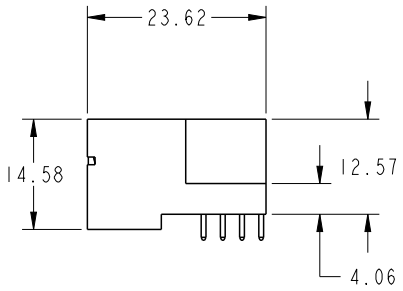

CODE	DIM "M" MATING LENGTH	CONTACT TYPE
F	[5.59]	SIGNAL
E	[5.59]	SIGNAL
T	[6.86]	SIGNAL
U	[6.86]	SIGNAL
H	[5.59]	SIGNAL
G	[5.59]	SIGNAL
PA	[N/A]	POWER

spec ref	*	dr	Ruan MT	2014/06/20	projection	MM	size A4 / scale 1:1
tolerance std ASME Y14.5	TOLERANCES UNLESS OTHERWISE SPECIFIED	eng	Ruan MT	2014/07/03			ecn no -
		chr	-	-			
		appr	Pei-Ming Zheng	2014/07/03	product family	PwrBlade	rel level **Released**
surface ✓	linear 0.X ±0.5 / 0.XX ±0.25 / 0.XXX ±0.1	FCI	title	3DCP + 16S + 3ACP RIGHT ANGLE XXX HEADER	dwg no	51939-893	rev **A**
ASME Y14.5	angular 0° ±2°	www.fci.com	cat. no.	-	Product - Customer Drw		sheet 1 of 4

Copyright FCI.

Pro/E File - REV C - 2009-06-09

PRODUCT NUMBER
51939-893__ NOTE: 3

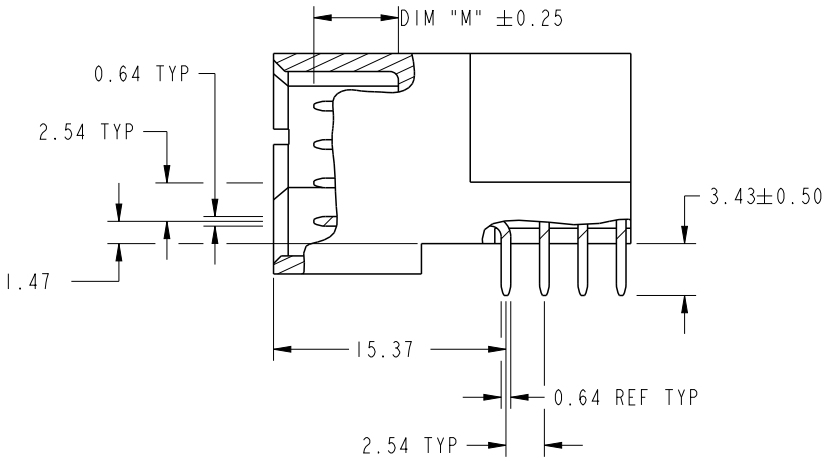

BROKEN-OUT SECTION A-A
SCALE 2:1

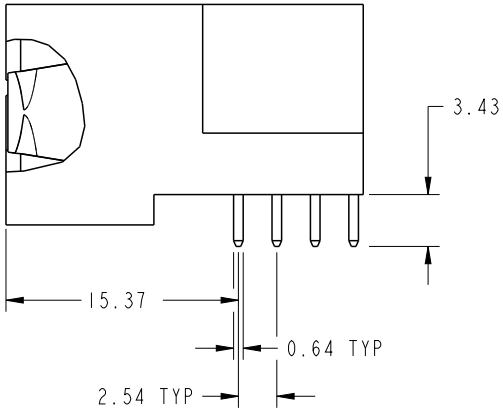

BROKEN-OUT SECTION B-B
SCALE 2:1

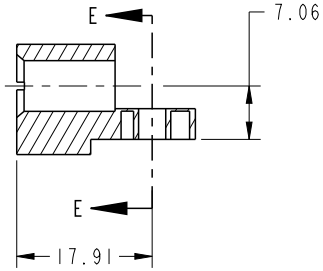

SECTION C-C

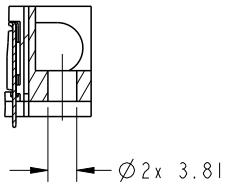

PARTIAL SECTION E-E

dr	Ruan MT	2014/06/20	projection	MM	size A4	scale 1:1
eng	Ruan MT	2014/07/03			ecn no	-
chr	-	-				
appr	Pei-Ming Zheng	2014/07/03	product family	PwrBlade	rel level	Released

FCI	title: 3DCP + 16S + 3ACP RIGHT ANGLE XXX HEADER	dwg no 51939-893	rev A
www.fci.com	cat. no. -	Product - Customer Drw	sheet 2 of 4

Copyright FCI.

Pro/E File - REV C - 2009-06-09

PRODUCT NUMBER
51939-893__ NOTE: 3

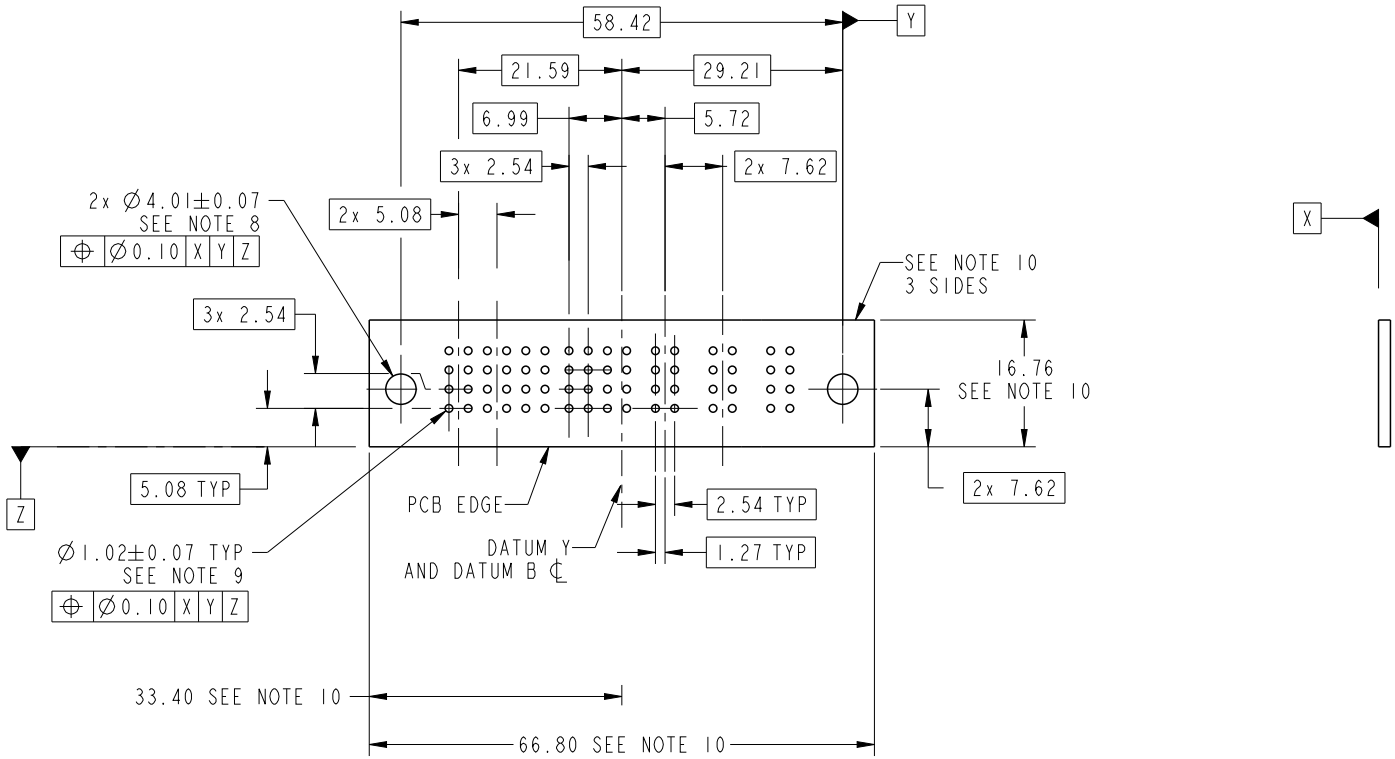

RECOMMENDED PCB LAYOUT

dr	Ruan MT	2014/06/20	projection	MM	size A4	scale 1:1
eng	Ruan MT	2014/07/03			ecn no	-
chr	-	-				
appr	Pei-Ming Zheng	2014/07/03	product family	PwrBlade	rel level	Released
FCI	title	3DCP + 16S + 3ACP RIGHT ANGLE XXX HEADER	dwg no	51939-893	rev	A
www.fci.com	cat. no.	-	Product - Customer Drw		sheet 3 of 4	

Copyright FCI.

Pro/E File - REV C - 2009-06-09

PRODUCT NUMBER
51939-893__ NOTE: 3

NOTES:

1. DIMENSIONS AND TOLERANCES ARE IN ACCORDANCE WITH ASME Y14.5M, 1994 UNLESS OTHERWISE SPECIFIED.

CONNECTOR NOTES:

2. HOUSING MATERIAL: UL 94 V-0 GLASS FILLED HIGH-TEMP THERMOPLASTIC
   POWER CONTACT MATERIAL: COPPER ALLOY
   SIGNAL PIN MATERIAL: COPPER ALLOY

3. SEE ITEM 1 & 2 IN PRINT 10064183 FOR PLATING SPEC OF 51939-893 AND 51939-893LF RESPECTIVELY.

4. MANUFACTURER'S NAME, DATE CODE AND OPTIONAL P/N TO APPEAR ON THIS SURFACE. THE MARK CAN BE OMITTED IF THERE IS NOT ENOUGH SPACE ON THIS SURFACE.

5. PRODUCT SPECIFICATION GS-12-149.
   APPLICATION SPECIFICATION BUS-20-067.

6. PACKAGED IN TRAYS.

PCB NOTES:

7. ALL HOLE DIAMETERS ARE FINISHED HOLE SIZE.

8. MOUNTING HOLES, WHERE APPLICABLE, ARE UNPLATED.

9. ∅1.151±0.025 DRILLED HOLES PLATED WITH 0.008 MIN SnPb OR Sn OVER 0.03 TO 0.08 Cu PLATING TO ACHIEVE ∅1.02±0.07 HOLE.

10. CONNECTOR KEEP-OUT ZONE.

dr	Ruan MT	2014/06/20	projection	MM	size A4 / scale 1:1
eng	Ruan MT	2014/07/03			
chr	-	-			ecn no -
appr	Pei-Ming Zheng	2014/07/03	product family	PwrBlade	rel level Released
title	3DCP + 16S + 3ACP RIGHT ANGLE XXX HEADER		dwg no	51939-893	rev A
www.fci.com	cat. no. -		Product - Customer Drw		sheet 4 of 4

Copyright FCI.

Pro/E File - REV C - 2009-06-09