KOA SPEER ELECTRONICS, INC.

MOS

reduced size metal oxide power type leaded resistor

EU RoHS COMPLIANT

features

- Small size power type resistor
- Coated with UL94V0 equivalent flameproof material
- Suitable for automatic machine insertion
- Marking: Pink body color with color-coded bands or alpha-numeric black marking
- Products with lead-free terminations meet EU RoHS and China RoHS requirements
- Surface mount style “N” forming is suitable for automatic mounting

dimensions and construction

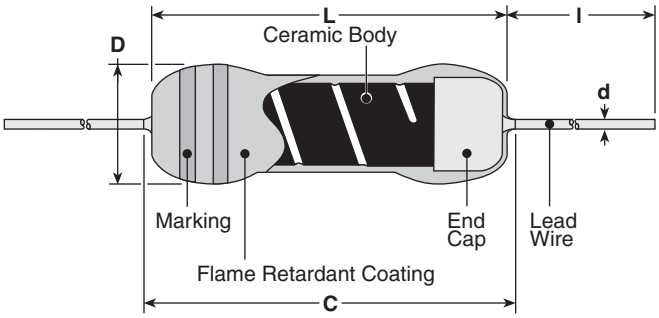

Type	Dimensions inches (mm) L	C (max.)	D	d (nom.)	l*
MOS1/2 MOSX1/2	.244±.02 (6.2±0.5)	.280 (7.1)	.098±.02 (2.5±0.5)	.024 (0.6)	.945 Min. (24.0 Min.)
MOS1 MOSX1	.354±.039 (9.0±1.0)	.437 (11.1)	.118±.02 (3.0±0.5)	.031 (0.8)	
MOS2 MOSX2	.472±.039 (12.0±1.0)	.591 (15.0)	.157±.02 (4.0±0.5)		
MOS3 MOSX3	.610±.039 (15.5±1.0)	.709 (18.0)	.236±.039 (6.0±1.0)		1.18±.118 (30.0±3.0)
MOS5 MOSX5	.965±.039 (24.5±1.0)	1.10 (28.0)	.354±.039 (9.0±1.0)		1.50±.118 (38.0±3.0)

* Lead length changes depending on taping and forming type.

ordering information

New Part #

MOS	1/2	C	T52	A	103	J
Type	**Power Rating**	**Termination Material**	**Taping and Forming**	**Packaging**	**Nominal Resistance**	**Tolerance**
MOS MOSX	1/2: 0.5W 1: 1W 2: 2W 3: 3W 5: 5W	C: SnCu	Axial: T26, T52, T521, T631 Stand-off Axial: L52, L521, L631 Radial: VTP, VTE, GT, GT4 L, U, M, N Forming	A: Ammo R: Reel TEB: Plastic embossed (N forming)	±2%, ±5%: 2 significant figures + 1 multiplier “R” indicates decimal on value <10Ω ±1%: 3 significant figures + 1 multiplier “R” indicates decimal on value <100Ω	F: ±1% G: ±2% J: ±5%

For further information on packaging, please refer to Appendix C.

Specifications given herein may be changed at any time without prior notice. Please confirm technical specifications before you order and/or use. 12/18/12

KOA SPEER ELECTRONICS, INC.

MOS

reduced size metal oxide power type leaded resistor

applications and ratings

Part Designation	Power Rating @ 70°C	Minimum Dielectric Withstanding Voltage	T.C.R. (ppm/°C) Max.	Resistance Range E-24, E-96* (F±1%)	Resistance Range E-24* (G±2%)	Resistance Range E-24 (J±5%)	Absolute Maximum Working Voltage	Absolute Maximum Overload Voltage	Operating Temperature Range
MOS1/2	0.5W	400V	±300	10Ω - 47kΩ	10Ω - 47kΩ	10Ω - 47kΩ	300V	600V	-55°C to +200°C
MOS1	1.0W	500V		10Ω - 68kΩ	10Ω - 68kΩ	10Ω - 100kΩ	350V		
MOS2	2.0W			10Ω - 100kΩ	10Ω - 100kΩ			700V	
MOS3	3.0W	700V		—					
MOS5	5.0W	800V					500V	1000V	
MOSX1/2	0.5W	400V		1Ω - 9.1Ω	0.22Ω - 9.1Ω	0.1Ω - 9.1Ω	$E = \sqrt{P \times R}$	E x 2.5	
MOSX1	1.0W	500V							
MOSX2	2.0W								
MOSX3	3.0W	700V		—					
MOSX5	5.0W	800V							

* Please consult when there is a demand of the resistance besides the 1% and 2% range.

environmental applications

Derating Curve

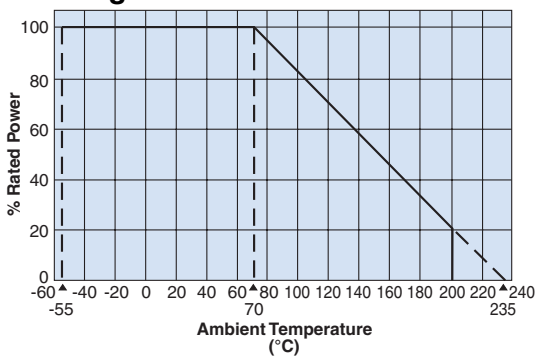

Surface Temperature Rise

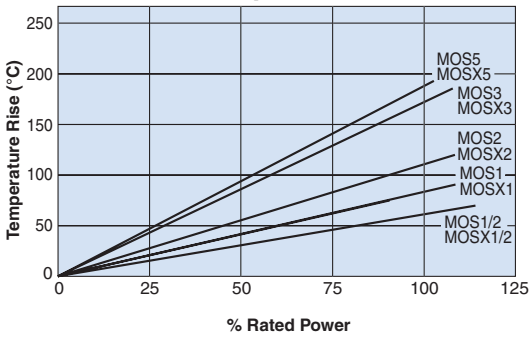

For resistors operated at an ambient temperature of 70°C or above, a power rating shall be derated in accordance with the above derating curve.

Performance Characteristics

Parameter	Requirement △ R ±(% + 0.05Ω) Limit	Typical	Test Method
Resistance	Within specified tolerance	—	Measuring points are at 10mm ±1mm from the end cap.
T.C.R.	Within specified T.C.R.	—	Room temperature +100°C
Overload (Short time)	±(2% +0.1Ω)	±1%	Rated voltage x 2.5 for 5 seconds
Resistance to Solder Heat	±1%	±0.5%	260°C ±5°C, 10 seconds ± 1 second
Terminal Strength	No lead-coming off and loose terminals	—	Twist 360°C, 5 times
Rapid Change of Temperature	±1%	±0.5%	-55°C (30 minutes), +155°C (30 minutes), 5 cycles
Moisture Resistance	±(5%+0.1Ω)	±2.5%	40°C ± 2°C, 90 - 95% RH, 1000 hours, 1.5 hr ON, 0.5 hr OFF cycle
Endurance at 70°C	±(5%+0.1Ω)	±2.5%	70°C ± 2°C, 1000 hours, 1.5 hr ON, 0.5 hr OFF cycle
Resistance to Solvent	No abnormality in appearance. Marking shall be easily legible	—	Ultrasonic washing with isopropyl alcohol for 2 minutes. Power: 0.3W/cm³, f: 28kHz, Temp: 35°C ±5°C
Flame Retardant	No evidence of flaming or self-flaming	—	Flame test: the test flame shall be applied and removed for each 15 seconds respectively to repeat the cycle 5 times. Overload flame retardant: power (AC) corresponding to 2, 4, 8, 16 and 32 times the power rating shall be applied for each 1 minute until disconnection occurs. However the applied voltage shall not exceed the value of 4 times of the maximum operating voltage

Specifications given herein may be changed at any time without prior notice. Please confirm technical specifications before you order and/or use. 11/20/14