KOA SPEER ELECTRONICS, INC.

# MOS

## reduced size metal oxide power type leaded resistor

EU RoHS COMPLIANT

## features

- Small size power type resistor
- Coated with UL94V0 equivalent flameproof material
- Suitable for automatic machine insertion
- Marking: Pink body color with color-coded bands or alpha-numeric black marking
- Products with lead-free terminations meet EU RoHS and China RoHS requirements
- Surface mount style “N” forming is suitable for automatic mounting

## dimensions and construction

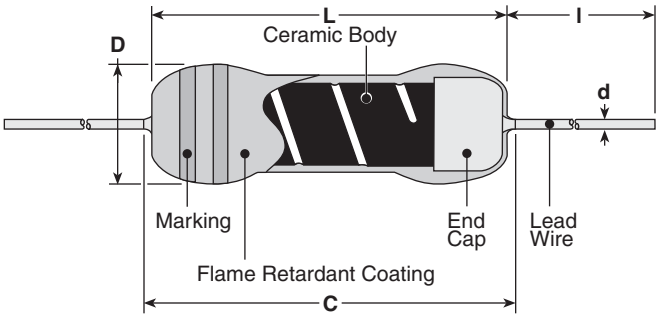


| Type | Dimensions inches (mm) L | C (max.) | D | d (nom.) | l* |
|---|---|---|---|---|---|
| MOS1/2 MOSX1/2 | .244±.02 (6.2±0.5) | .280 (7.1) | .098±.02 (2.5±0.5) | .024 (0.6) | .945 Min. (24.0 Min.) |
| MOS1 MOSX1 | .354±.039 (9.0±1.0) | .437 (11.1) | .118±.02 (3.0±0.5) | .031 (0.8) | |
| MOS2 MOSX2 | .472±.039 (12.0±1.0) | .591 (15.0) | .157±.02 (4.0±0.5) | | |
| MOS3 MOSX3 | .610±.039 (15.5±1.0) | .709 (18.0) | .236±.039 (6.0±1.0) | | 1.18±.118 (30.0±3.0) |
| MOS5 MOSX5 | .965±.039 (24.5±1.0) | 1.10 (28.0) | .354±.039 (9.0±1.0) | | 1.50±.118 (38.0±3.0) |

* Lead length changes depending on taping and forming type.

## ordering information

New Part #

| MOS | 1/2 | C | T52 | A | 103 | J |
|---|---|---|---|---|---|---|
| **Type** | **Power Rating** | **Termination Material** | **Taping and Forming** | **Packaging** | **Nominal Resistance** | **Tolerance** |
| MOS<br>MOSX | 1/2: 0.5W<br>1: 1W<br>2: 2W<br>3: 3W<br>5: 5W | C: SnCu | Axial: T26, T52, T521, T631<br>Stand-off Axial: L52, L521, L631<br>Radial: VTP, VTE, GT, GT4<br>L, U, M, N Forming | A: Ammo<br>R: Reel<br>TEB: Plastic embossed (N forming) | ±2%, ±5%: 2 significant figures + 1 multiplier “R” indicates decimal on value <10Ω<br>±1%: 3 significant figures + 1 multiplier “R” indicates decimal on value <100Ω | F: ±1%<br>G: ±2%<br>J: ±5% |

For further information on packaging, please refer to Appendix C.

Specifications given herein may be changed at any time without prior notice. Please confirm technical specifications before you order and/or use. 12/18/12

KOA SPEER ELECTRONICS, INC.

# MOS

## reduced size metal oxide power type leaded resistor

## applications and ratings

| Part Designation | Power Rating @ 70°C | Minimum Dielectric Withstanding Voltage | T.C.R. (ppm/°C) Max. | Resistance Range E-24, E-96* (F±1%) | Resistance Range E-24* (G±2%) | Resistance Range E-24 (J±5%) | Absolute Maximum Working Voltage | Absolute Maximum Overload Voltage | Operating Temperature Range |
|---|---|---|---|---|---|---|---|---|---|
| MOS1/2 | 0.5W | 400V | ±300 | 10Ω - 47kΩ | 10Ω - 47kΩ | 10Ω - 47kΩ | 300V | 600V | -55°C to +200°C |
| MOS1 | 1.0W | 500V | | 10Ω - 68kΩ | 10Ω - 68kΩ | 10Ω - 100kΩ | 350V | | |
| MOS2 | 2.0W | | | 10Ω - 100kΩ | 10Ω - 100kΩ | | | 700V | |
| MOS3 | 3.0W | 700V | | — | | | | | |
| MOS5 | 5.0W | 800V | | | | | 500V | 1000V | |
| MOSX1/2 | 0.5W | 400V | | 1Ω - 9.1Ω | 0.22Ω - 9.1Ω | 0.1Ω - 9.1Ω | $E = \sqrt{P \times R}$ | E x 2.5 | |
| MOSX1 | 1.0W | 500V | | | | | | | |
| MOSX2 | 2.0W | | | | | | | | |
| MOSX3 | 3.0W | 700V | | — | | | | | |
| MOSX5 | 5.0W | 800V | | | | | | | |

* Please consult when there is a demand of the resistance besides the 1% and 2% range.

## environmental applications

### Derating Curve

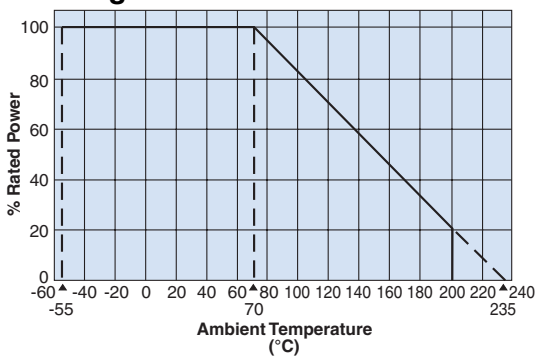


### Surface Temperature Rise

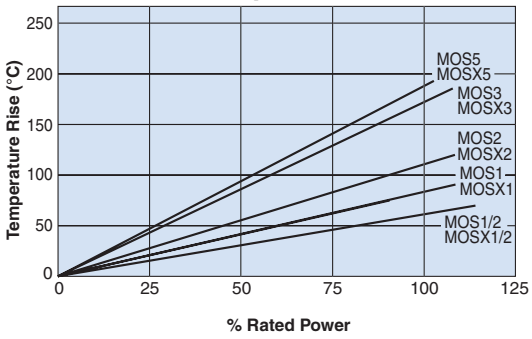


For resistors operated at an ambient temperature of 70°C or above, a power rating shall be derated in accordance with the above derating curve.

### Performance Characteristics

| Parameter | Requirement △ R ±(% + 0.05Ω) Limit | Typical | Test Method |
|---|---|---|---|
| Resistance | Within specified tolerance | — | Measuring points are at 10mm ±1mm from the end cap. |
| T.C.R. | Within specified T.C.R. | — | Room temperature +100°C |
| Overload (Short time) | ±(2% +0.1Ω) | ±1% | Rated voltage x 2.5 for 5 seconds |
| Resistance to Solder Heat | ±1% | ±0.5% | 260°C ±5°C, 10 seconds ± 1 second |
| Terminal Strength | No lead-coming off and loose terminals | — | Twist 360°C, 5 times |
| Rapid Change of Temperature | ±1% | ±0.5% | -55°C (30 minutes), +155°C (30 minutes), 5 cycles |
| Moisture Resistance | ±(5%+0.1Ω) | ±2.5% | 40°C ± 2°C, 90 - 95% RH, 1000 hours, 1.5 hr ON, 0.5 hr OFF cycle |
| Endurance at 70°C | ±(5%+0.1Ω) | ±2.5% | 70°C ± 2°C, 1000 hours, 1.5 hr ON, 0.5 hr OFF cycle |
| Resistance to Solvent | No abnormality in appearance. Marking shall be easily legible | — | Ultrasonic washing with isopropyl alcohol for 2 minutes. Power: 0.3W/cm³, f: 28kHz, Temp: 35°C ±5°C |
| Flame Retardant | No evidence of flaming or self-flaming | — | Flame test: the test flame shall be applied and removed for each 15 seconds respectively to repeat the cycle 5 times. Overload flame retardant: power (AC) corresponding to 2, 4, 8, 16 and 32 times the power rating shall be applied for each 1 minute until disconnection occurs. However the applied voltage shall not exceed the value of 4 times of the maximum operating voltage |

**Specifications given herein may be changed at any time without prior notice. Please confirm technical specifications before you order and/or use.** 11/20/14