MICRO SWITCH
a Honeywell Division
FED. MFG. CODE 91929

SWITCH-ENCLOSED

CATALOG LISTING
BAFI-2RQN8-LH

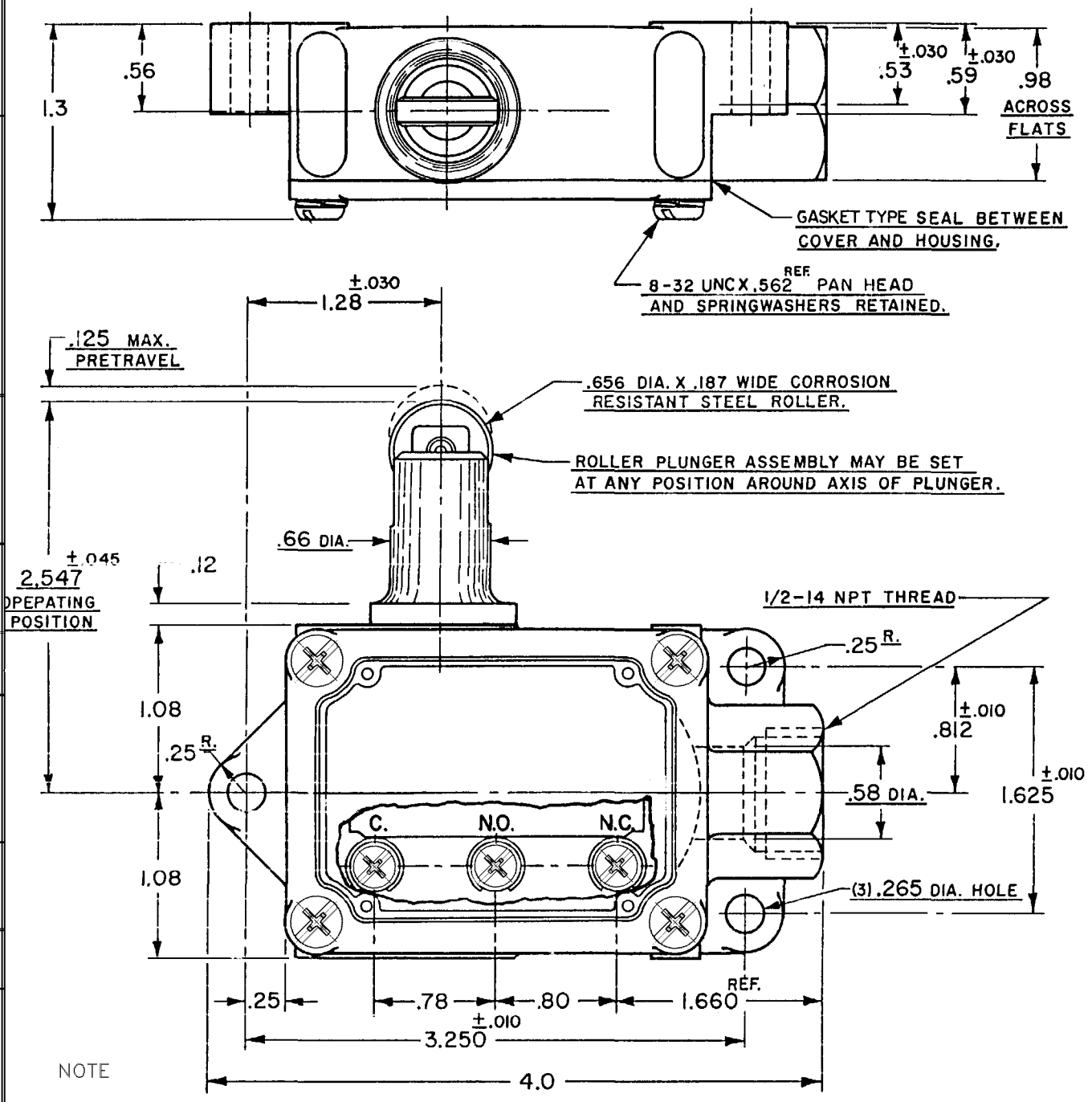

NOTE

1 – 8–32 UNC X (.219) BINDER HEAD, COMBINATION, TERMINAL SCREWS AND CUPWASHERS
2 – IT IS ESSENTIAL TO PREVENT ENTRANCE OF HARMFUL AGENTS THRU THE CONDUIT OPENINGS TO OBTAIN FULL BENEFITS OF THE WATERPROOF CONSTRUCTION PROVIDED IN THIS UNIT

THIS DRAWING COVERS A PROPRIETARY ITEM AND IS THE PROPERTY OF MICRO SWITCH, A DIVISION OF HONEYWELL. THIS DRAWING IS NOT TO BE COPIED OR USED WITHOUT THE APPROVAL OF MICRO SWITCH.

THIRD ANGLE PROJECTION

CHARACTERISTICS	ELECTRICAL DATA		SCALE FULL — DO NOT SCALE PRINT
OPERATING FORCE -------- 8 LBS. MAX.	CONTACT ARRANGEMENT: S P D T	BREAK DISTANCE: .020 MIN.	UNLESS OTHERWISE SPECIFIED TOLERANCES ARE
RELEASE FORCE ---------- 2 LBS. MIN.	L23 20A 125, 250 OR 480 VAC; 10A 125 VAC "L"; 1HP 125 VAC, 2HP 250 VAC; 1/2A 125 VDC, 1/4A 250 VDC		ONE PLACE (.0) ±.030
DIFFERENTIAL TRAVEL ------ .0075 MAX.			TWO PLACE (.00) ±.015
OVERTRAVEL ---------- .187 MIN.			THREE PLACE (.000) ±.005
SWITCH-BASIC REPLACEMENT --- BA-2R708-P7			ANGLES ±
			WEIGHT

CATALOG LISTING BAFI-2RQN8-LH
PAGE 1 OF 1
ISSUE 10
REPLACES
RELEASE NO. SR-3592
CHECK
REVISIONS
A CO-73287M GJW 16 MAY 95
CHECK
25 MAY 95 JJA
CHECK
16 MAY 95 GJW
DRAWN
FORMTEK