nichicon

UBC

Chip Type, High Temperature Range, Vibration Resistance

For SMD | Long Life | Anti-Solvent Feature

- Highly dependable reliability withstanding load life of 1000 hours at +150°C.
- Suited for automobile electronics where heavy duty services are indispensable.
- Compliant to the RoHS directive (2011/65/EU,(EU)2015/863).
- AEC-Q200 compliant. Please contact us for details.

UBC

High Temperature

UUE

■Specifications

Item	Performance Characteristics							
Category Temperature Range	−40 to +150°C (φ8 to 10), −55 to +150°C (φ12.5 to 18)							
Rated Voltage Range	10 to 50V							
Rated Capacitance Range	33 to 3300μF							
Capacitance Tolerance	±20% at 120Hz, 20°C							
Leakage Current	After 1 minute's application of rated voltage at 20°C, leakage current is not more than 0.03CV or 4 (μA), whichever is greater.							
Tangent of loss angle (tan δ)	Rated voltage (V)		10	16	25	35	50	120Hz 20°C
	tan δ (MAX.)	φ8, φ10	0.26	0.20	0.16	0.14	0.14	
		φ12.5 to φ18	0.22	0.18	0.16	0.14	0.12	
	For capacitance of more than 1000μF, add 0.02 for every increase of 1000μF. (φ12.5 to φ18)							
Stability at Low Temperature	Rated voltage (V)		10	16	25	35	50	120Hz
	Impedance ratio Z−40°C / Z+20°C (MAX.)	φ8, φ10	10	8	6	4	4	
		φ12.5 to φ18	8	6	4	4	4	
Endurance	The specifications listed at right shall be met when the capacitors are restored to 20°C after the rated voltage is applied for 1000 hours at 150°C.							
	Capacitance change	Within ±30% of the initial capacitance value						
	tan δ	300% or less than the initial specified value						
	Leakage current	Less than or equal to the initial specified value						
Shelf Life	After storing the capacitors under no load at 150°C for 1000 hours and then performing voltage treatment based on JIS C 5101-4 clause 4.1 at 20°C, they shall meet the specified values for the endurance characteristics listed above.							
Marking	Black print on the case top.							

■Chip Type

(φ8 , φ10) 【Vibration Resistance】

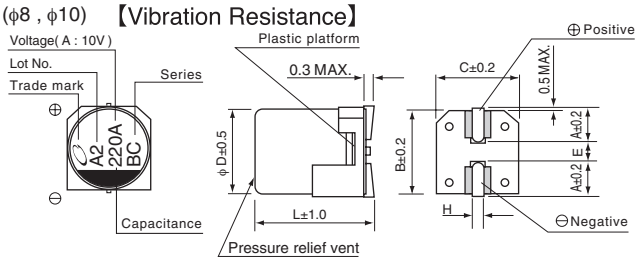

(φ12.5 to φ18) 【Vibration Resistance】

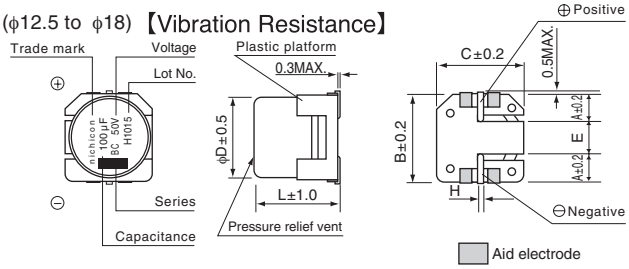

Type numbering system (Example : 10V 220μF)

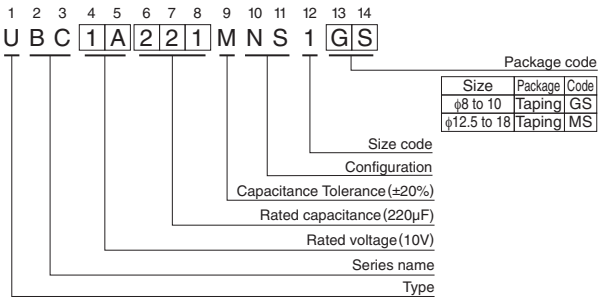

(mm)

φD	8	10	12.5	16	18
A	2.9	3.2	4.8	5.4	6.4
B	8.3	10.3	13.6	17.1	19.1
C	8.3	10.3	13.6	17.1	19.1
E	3.1	4.5	4.0	6.3	6.3
L	10	10	13.5	16.5,21.5	21.5
H	1.1 to 1.5	1.1 to 1.5	1.0 to 1.4	1.0 to 1.4	1.0 to 1.4

■Dimensions

Cap.(μF) \ V	Code	10		16		25		35		50	
		1A		1C		1E		1V		1H	
33	330									8×10	70
47	470							8×10	80	10×10	100
100	101			8×10	110	8×10	110	10×10	120	12.5×13.5	420
220	221	8×10	110	10×10	150	10×10	150	12.5×13.5	550	16×16.5	550
330	331	10×10	150			12.5×13.5	650	12.5×13.5	650	16×21.5	650
470	471			12.5×13.5	750	12.5×13.5	700	16×16.5	750	16×21.5	850
680	681	12.5×13.5	800	12.5×13.5	800	16×16.5	800	16×21.5	950	18×21.5	1100
1000	102	12.5×13.5	900	16×16.5	850	16×21.5	1000	18×21.5	1150		
2200	222	18×21.5	1350	18×21.5	1350					Case size φD×L (mm)	Rated ripple
3300	332	18×21.5	1400								

Rated ripple current (mArms) at 150°C 100kHz

● Frequency coefficient of rated ripple current

Frequency	120 Hz	300 Hz	1 kHz	10kHz or more
Coefficient	0.67	0.79	0.91	1.00

- Taping specifications are given in page 23.
- Recommended land size, soldering by reflow are given in page 18, 19.
- Please refer to page 3 for the minimum order quantity.