THIS DRAWING IS UNPUBLISHED. RELEASED FOR PUBLICATION 20
© COPYRIGHT 20 BY - ALL RIGHTS RESERVED.

REVISIONS					
P	LTR	DESCRIPTION	DATE	DWN	APVD
	A8	ECR-18-003717	11MAR2018	LP	TD

SUGGESTED MATING TAB

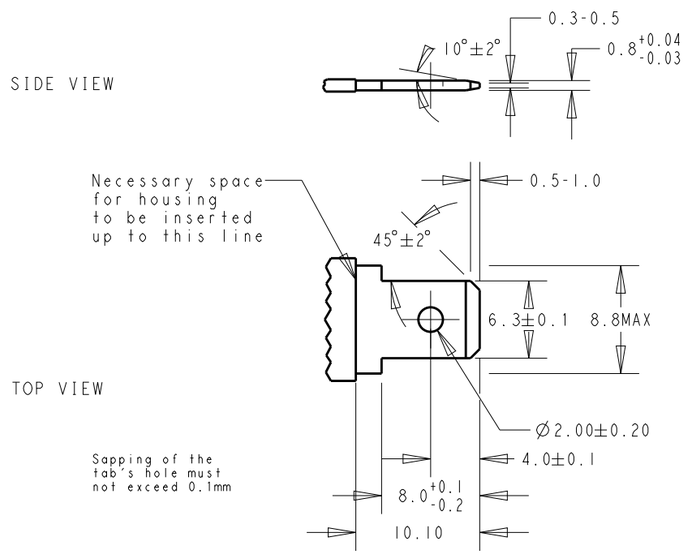

TYPE A (When using tab shoulder for butting)

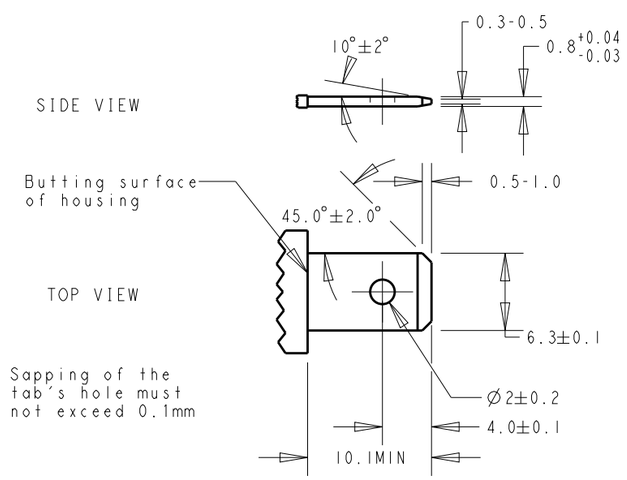

TYPE B(When using resin, etc. for butting)

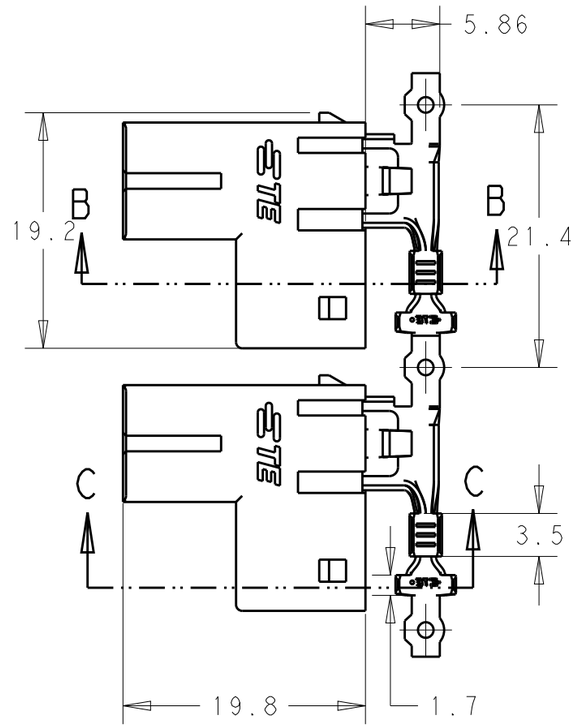

NOTE:

1. CONTACT MATEIRAL,TIN PLATED BRASS.
2. HOUSING MATERIAL,NYLON 6/66,GLASS-FIBRE. UL94V-0.
3. GWT 750°C VERSION,ACCORDING TO IEC 60335-1.

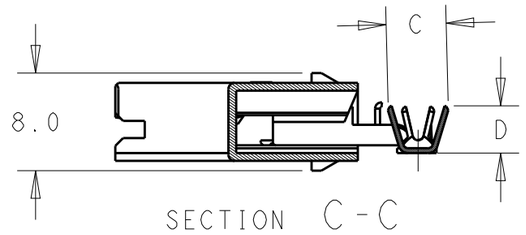

SECTION C-C

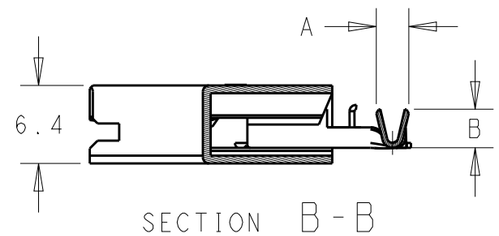

SECTION B-B

6.9REF.(HIGH SIDE) 3.6REF.(SHORT SIDE)	6.6	4.5REF.	4.2	3.40-4.32	14-12	2299280-3
				3.0-4.0	16-14	2299280-2
3.9REF.	4.9	3.1REF.	2.7	2.2-3.0	22-18	2299280-1
DIM D	DIM C	DIM B	DIM A	INSULATION	WIRE SIZE(AWG)	P/N

THIS DRAWING IS A CONTROLLED DOCUMENT.

DIMENSIONS: mm

TOLERANCES UNLESS OTHERWISE SPECIFIED:
0 PLC ±-
1 PLC ±0.3
2 PLC ±0.25
3 PLC ±-
4 PLC ±-
ANGLES ±-

MATERIAL - -
FINISH - -

DWN LEI PAN 08FEB2017
CHK TIM DING 08FEB2017
APVD TIM DING 08FEB2017
PRODUCT SPEC 108-106262
APPLICATION SPEC 114-106262
WEIGHT -

CUSTOMER DRAWING

TE Connectivity

NAME POD-LOK 250 FLAG ASSY.

SIZE	CAGE CODE	DRAWING NO	RESTRICTED TO
A3	-	C-2299280	-

SCALE 2:1 SHEET 1 OF 1 REV A8