165-Bump BGA
Commercial Temp
Industrial Temp

36Mb SigmaQuad-II+™ Burst of 2 SRAM

357 MHz–200 MHz
1.8 V V_{DD}
1.8 V and 1.5 V I/O

Features

- 2.0 Clock Latency
- Simultaneous Read and Write SigmaQuad™ Interface
- JEDEC-standard pinout and package
- Dual Double Data Rate interface
- Byte Write controls sampled at data-in time
- On-Die Termination (ODT) on Data (D), Byte Write ($\overline{BW}$), and Clock (K, $\overline{K}$) inputs
- Burst of 2 Read and Write
- 1.8 V +100/–100 mV core power supply
- 1.5 V or 1.8 V HSTL Interface
- Pipelined read operation
- Fully coherent read and write pipelines
- ZQ pin for programmable output drive strength
- Data Valid Pin (QVLD) Support
- IEEE 1149.1 JTAG-compliant Boundary Scan
- 165-bump, 13 mm x 15 mm, 1 mm bump pitch BGA package
- RoHS-compliant 165-bump BGA package available

SigmaQuad™ Family Overview

The GS8342Q07/10/19/37BD are built in compliance with the SigmaQuad-II+ SRAM pinout standard for Separate I/O synchronous SRAMs. They are 37,748,736-bit (36Mb) SRAMs. The GS8342Q07/10/19/37BD SigmaQuad SRAMs are just one element in a family of low power, low voltage HSTL I/O SRAMs designed to operate at the speeds needed to implement economical high performance networking systems.

Clocking and Addressing Schemes

The GS8342Q07/10/19/37BD SigmaQuad-II+ SRAMs are synchronous devices. They employ two input register clock inputs, K and $\overline{K}$. K and $\overline{K}$ are independent single-ended clock inputs, not differential inputs to a single differential clock input buffer.

Each internal read and write operation in a SigmaQuad-II+ B2 RAM is two times wider than the device I/O bus. An input data bus de-multiplexer is used to accumulate incoming data before it is simultaneously written to the memory array. An output data multiplexer is used to capture the data produced from a single memory array read and then route it to the appropriate output drivers as needed. Therefore the address field of a SigmaQuad-II+ B2 RAM is always one address pin less than the advertised index depth (e.g., the 4M x 8 has a 2M addressable index).

Parameter Synopsis

	-357	-333	-300	-250	-200
tKHKH	2.8 ns	3.0 ns	3.3 ns	4.0 ns	5.0 ns
tKHQV	0.45 ns	0.45 ns	0.45 ns	0.45 ns	0.45 ns

 © 2011, GSI Technology

Specifications cited are subject to change without notice. For latest documentation see http://www.gsitechnology.com.

4M x 8 SigmaQuad-II SRAM—Top View

	1	2	3	4	5	6	7	8	9	10	11
A	$\overline{CQ}$	NC/SA (72Mb)	SA	$\overline{W}$	$\overline{NW1}$	$\overline{K}$	NC/SA (144Mb)	$\overline{R}$	SA	SA	CQ
B	NC	NC	NC	SA	NC/SA (288Mb)	K	$\overline{NW0}$	SA	NC	NC	Q3
C	NC	NC	NC	V_{SS}	SA	SA	SA	V_{SS}	NC	NC	D3
D	NC	D4	NC	V_{SS}	V_{SS}	V_{SS}	V_{SS}	V_{SS}	NC	NC	NC
E	NC	NC	Q4	V_{DDQ}	V_{SS}	V_{SS}	V_{SS}	V_{DDQ}	NC	D2	Q2
F	NC	NC	NC	V_{DDQ}	V_{DD}	V_{SS}	V_{DD}	V_{DDQ}	NC	NC	NC
G	NC	D5	Q5	V_{DDQ}	V_{DD}	V_{SS}	V_{DD}	V_{DDQ}	NC	NC	NC
H	$\overline{Doff}$	V_{REF}	V_{DDQ}	V_{DDQ}	V_{DD}	V_{SS}	V_{DD}	V_{DDQ}	V_{DDQ}	V_{REF}	ZQ
J	NC	NC	NC	V_{DDQ}	V_{DD}	V_{SS}	V_{DD}	V_{DDQ}	NC	Q1	D1
K	NC	NC	NC	V_{DDQ}	V_{DD}	V_{SS}	V_{DD}	V_{DDQ}	NC	NC	NC
L	NC	Q6	D6	V_{DDQ}	V_{SS}	V_{SS}	V_{SS}	V_{DDQ}	NC	NC	Q0
M	NC	NC	NC	V_{SS}	V_{SS}	V_{SS}	V_{SS}	V_{SS}	NC	NC	D0
N	NC	D7	NC	V_{SS}	SA	SA	SA	V_{SS}	NC	NC	NC
P	NC	NC	Q7	SA	SA	QVLD	SA	SA	NC	NC	NC
R	TDO	TCK	SA	SA	SA	ODT	SA	SA	SA	TMS	TDI

11 x 15 Bump BGA—13 x 15 mm Body—1 mm Bump Pitch

Notes:
1. $\overline{NW0}$ controls writes to D0:D3. $\overline{NW1}$ controls writes to D4:D7.
2. Pins A2, A7, and B5 are the expansion addresses.

 © 2011, GSI Technology
Specifications cited are subject to change without notice. For latest documentation see http://www.gsitechnology.com.

4M x 9 SigmaQuad-II SRAM—Top View

	1	2	3	4	5	6	7	8	9	10	11
A	$\overline{CQ}$	NC/SA (72Mb)	SA	$\overline{W}$	NC	$\overline{K}$	NC/SA (144Mb)	$\overline{R}$	SA	SA	CQ
B	NC	NC	NC	SA	NC/SA (288Mb)	K	$\overline{BW0}$	SA	NC	NC	Q4
C	NC	NC	NC	V_{SS}	SA	SA	SA	V_{SS}	NC	NC	D4
D	NC	D5	NC	V_{SS}	V_{SS}	V_{SS}	V_{SS}	V_{SS}	NC	NC	NC
E	NC	NC	Q5	V_{DDQ}	V_{SS}	V_{SS}	V_{SS}	V_{DDQ}	NC	D3	Q3
F	NC	NC	NC	V_{DDQ}	V_{DD}	V_{SS}	V_{DD}	V_{DDQ}	NC	NC	NC
G	NC	D6	Q6	V_{DDQ}	V_{DD}	V_{SS}	V_{DD}	V_{DDQ}	NC	NC	NC
H	$\overline{Doff}$	V_{REF}	V_{DDQ}	V_{DDQ}	V_{DD}	V_{SS}	V_{DD}	V_{DDQ}	V_{DDQ}	V_{REF}	ZQ
J	NC	NC	NC	V_{DDQ}	V_{DD}	V_{SS}	V_{DD}	V_{DDQ}	NC	Q2	D2
K	NC	NC	NC	V_{DDQ}	V_{DD}	V_{SS}	V_{DD}	V_{DDQ}	NC	NC	NC
L	NC	Q7	D7	V_{DDQ}	V_{SS}	V_{SS}	V_{SS}	V_{DDQ}	NC	NC	Q1
M	NC	NC	NC	V_{SS}	V_{SS}	V_{SS}	V_{SS}	V_{SS}	NC	NC	D1
N	NC	D8	NC	V_{SS}	SA	SA	SA	V_{SS}	NC	NC	NC
P	NC	NC	Q8	SA	SA	QVLD	SA	SA	NC	D0	Q0
R	TDO	TCK	SA	SA	SA	ODT	SA	SA	SA	TMS	TDI

11 x 15 Bump BGA—13 x 15 mm Body—1 mm Bump Pitch

Notes:
1. $\overline{BW0}$ controls writes to D0:D8.
2. Pins A2, A7, and B5 are the expansion addresses.

 © 2011, GSI Technology

Specifications cited are subject to change without notice. For latest documentation see http://www.gsitechnology.com.

2M x 18 SigmaQuad-II+ SRAM—Top View

	1	2	3	4	5	6	7	8	9	10	11
A	$\overline{CQ}$	NC/SA (144Mb)	SA	$\overline{W}$	$\overline{BW1}$	$\overline{K}$	NC/SA (288Mb)	$\overline{R}$	SA	NC/SA (72Mb)	CQ
B	NC	Q9	D9	SA	NC	K	$\overline{BW0}$	SA	NC	NC	Q8
C	NC	NC	D10	V_{SS}	SA	SA	SA	V_{SS}	NC	Q7	D8
D	NC	D11	Q10	V_{SS}	V_{SS}	V_{SS}	V_{SS}	V_{SS}	NC	NC	D7
E	NC	NC	Q11	V_{DDQ}	V_{SS}	V_{SS}	V_{SS}	V_{DDQ}	NC	D6	Q6
F	NC	Q12	D12	V_{DDQ}	V_{DD}	V_{SS}	V_{DD}	V_{DDQ}	NC	NC	Q5
G	NC	D13	Q13	V_{DDQ}	V_{DD}	V_{SS}	V_{DD}	V_{DDQ}	NC	NC	D5
H	$\overline{Doff}$	V_{REF}	V_{DDQ}	V_{DDQ}	V_{DD}	V_{SS}	V_{DD}	V_{DDQ}	V_{DDQ}	V_{REF}	ZQ
J	NC	NC	D14	V_{DDQ}	V_{DD}	V_{SS}	V_{DD}	V_{DDQ}	NC	Q4	D4
K	NC	NC	Q14	V_{DDQ}	V_{DD}	V_{SS}	V_{DD}	V_{DDQ}	NC	D3	Q3
L	NC	Q15	D15	V_{DDQ}	V_{SS}	V_{SS}	V_{SS}	V_{DDQ}	NC	NC	Q2
M	NC	NC	D16	V_{SS}	V_{SS}	V_{SS}	V_{SS}	V_{SS}	NC	Q1	D2
N	NC	D17	Q16	V_{SS}	SA	SA	SA	V_{SS}	NC	NC	D1
P	NC	NC	Q17	SA	SA	QVLD	SA	SA	NC	D0	Q0
R	TDO	TCK	SA	SA	SA	ODT	SA	SA	SA	TMS	TDI

11 x 15 Bump BGA—13 x 15 mm Body—1 mm Bump Pitch

Notes:
1. $\overline{BW0}$ controls writes to D0:D8. $\overline{BW1}$ controls writes to D9:D17.
2. Pins A2, A7, and A10 are the expansion addresses.

 © 2011, GSI Technology

Specifications cited are subject to change without notice. For latest documentation see http://www.gsitechnology.com.

1M x 36 SigmaQuad-II+ SRAM—Top View

	1	2	3	4	5	6	7	8	9	10	11
A	$\overline{CQ}$	NC/SA (288Mb)	NC/SA (72Mb)	$\overline{W}$	$\overline{BW2}$	$\overline{K}$	$\overline{BW1}$	$\overline{R}$	SA	NC/SA (144Mb)	CQ
B	Q27	Q18	D18	SA	$\overline{BW3}$	K	$\overline{BW0}$	SA	D17	Q17	Q8
C	D27	Q28	D19	V_{SS}	SA	SA	SA	V_{SS}	D16	Q7	D8
D	D28	D20	Q19	V_{SS}	V_{SS}	V_{SS}	V_{SS}	V_{SS}	Q16	D15	D7
E	Q29	D29	Q20	V_{DDQ}	V_{SS}	V_{SS}	V_{SS}	V_{DDQ}	Q15	D6	Q6
F	Q30	Q21	D21	V_{DDQ}	V_{DD}	V_{SS}	V_{DD}	V_{DDQ}	D14	Q14	Q5
G	D30	D22	Q22	V_{DDQ}	V_{DD}	V_{SS}	V_{DD}	V_{DDQ}	Q13	D13	D5
H	$\overline{Doff}$	V_{REF}	V_{DDQ}	V_{DDQ}	V_{DD}	V_{SS}	V_{DD}	V_{DDQ}	V_{DDQ}	V_{REF}	ZQ
J	D31	Q31	D23	V_{DDQ}	V_{DD}	V_{SS}	V_{DD}	V_{DDQ}	D12	Q4	D4
K	Q32	D32	Q23	V_{DDQ}	V_{DD}	V_{SS}	V_{DD}	V_{DDQ}	Q12	D3	Q3
L	Q33	Q24	D24	V_{DDQ}	V_{SS}	V_{SS}	V_{SS}	V_{DDQ}	D11	Q11	Q2
M	D33	Q34	D25	V_{SS}	V_{SS}	V_{SS}	V_{SS}	V_{SS}	D10	Q1	D2
N	D34	D26	Q25	V_{SS}	SA	SA	SA	V_{SS}	Q10	D9	D1
P	Q35	D35	Q26	SA	SA	QVLD	SA	SA	Q9	D0	Q0
R	TDO	TCK	SA	SA	SA	ODT	SA	SA	SA	TMS	TDI

11 x 15 Bump BGA—13 x 15 mm Body—1 mm Bump Pitch

Notes:

3. $\overline{BW0}$ controls writes to D0:D8; $\overline{BW1}$ controls writes to D9:D17; $\overline{BW2}$ controls writes to D18:D26; $\overline{BW3}$ controls writes to D27:D35
4. Pins A2, A3, and A10 are the expansion addresses.

 © 2011, GSI Technology

Specifications cited are subject to change without notice. For latest documentation see http://www.gsitechnology.com.

Pin Description Table

Symbol	Description	Type	Comments
SA	Synchronous Address Inputs	Input	—
$\overline{R}$	Synchronous Read	Input	Active Low
$\overline{W}$	Synchronous Write	Input	Active Low
$\overline{BW0}$–$\overline{BW3}$	Synchronous Byte Writes	Input	Active Low
$\overline{NW0}$–$\overline{NW1}$	Synchronous Nybble Writes	Input	Active Low (x8 only)
K	Input Clock	Input	Active High
$\overline{K}$	Input Clock	Input	Active Low
TMS	Test Mode Select	Input	—
TDI	Test Data Input	Input	—
TCK	Test Clock Input	Input	—
TDO	Test Data Output	Output	—
V_{REF}	HSTL Input Reference Voltage	Input	—
ZQ	Output Impedance Matching Input	Input	—
Qn	Synchronous Data Outputs	Output	—
Dn	Synchronous Data Inputs	Input	—
$\overline{Doff}$	Disable DLL when low	Input	Active Low
CQ	Output Echo Clock	Output	—
$\overline{CQ}$	Output Echo Clock	Output	—
V_{DD}	Power Supply	Supply	1.8 V Nominal
V_{DDQ}	Isolated Output Buffer Supply	Supply	1.8 V or 1.5 V Nominal
V_{SS}	Power Supply: Ground	Supply	—
QVLD	Q Valid Output	Output	—
ODT	On-Die Termination	Input	Active High
NC	No Connect	—	—

Notes:

1. NC = Not Connected to die or any other pin
2. When ZQ pin is directly connected to V_{DDQ}, output impedance is set to minimum value and it cannot be connected to ground or left unconnected.
3. K, $\overline{K}$ cannot be set to V_{REF} voltage.

 © 2011, GSI Technology

Specifications cited are subject to change without notice. For latest documentation see http://www.gsitechnology.com.

Background

Separate I/O SRAMs, from a system architecture point of view, are attractive in applications where alternating reads and writes are needed. Therefore, the SigmaQuad-II+ SRAM interface and truth table are optimized for alternating reads and writes. Separate I/O SRAMs are unpopular in applications where multiple reads or multiple writes are needed because burst read or write transfers from Separate I/O SRAMs can cut the RAM's bandwidth in half.

SigmaQuad-II B2 SRAM DDR Read

The read port samples the status of the Address Input and $\overline{R}$ pins at each rising edge of K. A low on the Read Enable-bar pin, $\overline{R}$, begins a read cycle. Clocking in a high on the Read Enable-bar pin, $\overline{R}$, begins a read port deselect cycle.

SigmaQuad-II B2 SRAM DDR Write

The write port samples the status of the $\overline{W}$ pin at each rising edge of K and the Address Input pins on the following rising edge of $\overline{K}$. A low on the Write Enable-bar pin, $\overline{W}$, begins a write cycle. The first of the data-in pairs associated with the write command is clocked in with the same rising edge of K used to capture the write command. The second of the two data in transfers is captured on the rising edge of $\overline{K}$ along with the write address. Clocking in a high on $\overline{W}$ causes a write port deselect cycle.

Special Functions

Byte Write and Nybble Write Control

Byte Write Enable pins are sampled at the same time that Data In is sampled. A High on the Byte Write Enable pin associated with a particular byte (e.g., $\overline{BW0}$ controls D0–D8 inputs) will inhibit the storage of that particular byte, leaving whatever data may be stored at the current address at that byte location undisturbed. Any or all of the Byte Write Enable pins may be driven High or Low during the data in sample times in a write sequence.

Each write enable command and write address loaded into the RAM provides the base address for a 2beat data transfer. The x18 version of the RAM, for example, may write 36 bits in association with each address loaded. Any 9-bit byte may be masked in any write sequence.

Nybble Write (4-bit) control is implemented on the 8-bit-wide version of the device. For the x8 version of the device, "Nybble Write Enable" and "$\overline{NWx}$" may be substituted in all the discussion above.

Example x18 RAM Write Sequence using Byte Write Enables

Data In Sample Time	$\overline{BW0}$	$\overline{BW1}$	D0–D8	D9–D17
Beat 1	0	1	Data In	Don't Care
Beat 2	1	0	Don't Care	Data In

Resulting Write Operation

Byte 1 D0–D8	Byte 2 D9–D17	Byte 3 D0–D8	Byte 4 D9–D17
Written	Unchanged	Unchanged	Written
Beat 1		Beat 2	

 © 2011, GSI Technology

Specifications cited are subject to change without notice. For latest documentation see http://www.gsitechnology.com.

FLXDrive-II Output Driver Impedance Control

HSTL I/O SigmaQuad-II+ SRAMs are supplied with programmable impedance output drivers. The ZQ pin must be connected to V_{SS} via an external resistor, RQ, to allow the SRAM to monitor and adjust its output driver impedance. The value of RQ must be 5X the value of the desired RAM output impedance. The allowable range of RQ to guarantee impedance matching continuously is between 175Ω and 350Ω. Periodic readjustment of the output driver impedance is necessary as the impedance is affected by drifts in supply voltage and temperature. The SRAM's output impedance circuitry compensates for drifts in supply voltage and temperature. A clock cycle counter periodically triggers an impedance evaluation, resets and counts again. Each impedance evaluation may move the output driver impedance level one step at a time towards the optimum level. The output driver is implemented with discrete binary weighted impedance steps.

Input Termination Impedance Control

These SigmaQuad-II+ SRAMs are supplied with programmable input termination on Data (D), Byte Write ($\overline{BW}$), and Clock (K/$\overline{K}$) input receivers. Input termination can be enabled or disabled via the ODT pin (6R). When the ODT pin is tied Low (or left floating —the pin has a small pull-down resistor), input termination is disabled. When the ODT pin is tied High, input termination is enabled. Termination impedance is programmed via the same RQ resistor (connected between the ZQ pin and V_{SS}) used to program output driver impedance, and is nominally RQ*0.6 Thevenin-equivalent when RQ is between 175Ω and 250Ω. Periodic readjustment of the termination impedance occurs to compensate for drifts in supply voltage and temperature, in the same manner as for driver impedance (see above).

Note:
When ODT = 1, Data (D), Byte Write (BW), and Clock (K, $\overline{K}$) input termination is always enabled. Consequently, D, $\overline{BW}$, K, $\overline{K}$ inputs should always be driven High or Low; they should never be tri-stated (i.e., in a High-Z state). If the inputs are tri-stated, the input termination will pull the signal to $V_{DDQ}/2$ (i.e., to the switch point of the diff-amp receiver), which could cause the receiver to enter a meta-stable state and prevent the SRAM from operating within specification.

Separate I/O SigmaQuad-II B2 SRAM Read Truth Table

A	$\overline{R}$	Output Next State	Q	Q
K↑ (t_n)	K↑ (t_n)	K↑ (t_n)	K↑ (t_{n+2})	$\overline{K}$↑ ($t_{n+2½}$)
X	1	Deselect	Hi-Z	Hi-Z
V	0	Read	Q0	Q1

Notes:
1. X = Don't Care, 1 = High, 0 = Low, V = Valid.
2. $\overline{R}$ is evaluated on the rising edge of K.
3. Q0 and Q1 are the first and second data output transfers in a read.

 © 2011, GSI Technology
Specifications cited are subject to change without notice. For latest documentation see http://www.gsitechnology.com.

Separate I/O SigmaQuad-II B2 SRAM Write Truth Table

A	$\overline{W}$	$\overline{BWn}/\overline{NWn}$	$\overline{BWn}/\overline{NWn}$	Input Next State	D	D
$\overline{K}\uparrow$ ($t_{n+½}$)	$K\uparrow$ (t_n)	$K\uparrow$ (t_n)	$\overline{K}\uparrow$ ($t_{n+½}$)	$K\uparrow, \overline{K}\uparrow$ (t_n), ($t_{n+½}$)	$K\uparrow$ (t_n)	$\overline{K}\uparrow$ ($t_{n+½}$)
V	0	0	0	Write Byte Dx0, Write Byte Dx1	D0	D1
V	0	0	1	Write Byte Dx0, Write Abort Byte Dx1	D0	X
V	0	1	0	Write Abort Byte Dx0, Write Byte Dx1	X	D1
X	0	1	1	Write Abort Byte Dx0, Write Abort Byte Dx1	X	X
X	1	X	X	Deselect	X	X

Notes:
1. X = Don't Care, H = High, L = Low, V = Valid.
2. $\overline{W}$ is evaluated on the rising edge of K.
3. D0 and D1 are the first and second data input transfers in a write.
4. $\overline{BWn}$ represents any of the Byte Write Enable inputs ($\overline{BW0}$, $\overline{BW1}$, etc.). $\overline{NWn}$ represents any of the Nybble Write Enable inputs ($\overline{NW0}$, $\overline{NW1}$).

x36 Byte Write Enable ($\overline{BWn}$) Truth Table

$\overline{BW0}$	$\overline{BW1}$	$\overline{BW2}$	$\overline{BW3}$	D0–D8	D9–D17	D18–D26	D27–D35
1	1	1	1	Don't Care	Don't Care	Don't Care	Don't Care
0	1	1	1	Data In	Don't Care	Don't Care	Don't Care
1	0	1	1	Don't Care	Data In	Don't Care	Don't Care
0	0	1	1	Data In	Data In	Don't Care	Don't Care
1	1	0	1	Don't Care	Don't Care	Data In	Don't Care
0	1	0	1	Data In	Don't Care	Data In	Don't Care
1	0	0	1	Don't Care	Data In	Data In	Don't Care
0	0	0	1	Data In	Data In	Data In	Don't Care
1	1	1	0	Don't Care	Don't Care	Don't Care	Data In
0	1	1	0	Data In	Don't Care	Don't Care	Data In
1	0	1	0	Don't Care	Data In	Don't Care	Data In
0	0	1	0	Data In	Data In	Don't Care	Data In
1	1	0	0	Don't Care	Don't Care	Data In	Data In
0	1	0	0	Data In	Don't Care	Data In	Data In
1	0	0	0	Don't Care	Data In	Data In	Data In
0	0	0	0	Data In	Data In	Data In	Data In

 © 2011, GSI Technology
Specifications cited are subject to change without notice. For latest documentation see http://www.gsitechnology.com.

x18 Byte Write Enable ($\overline{BWn}$) Truth Table

$\overline{BW0}$	$\overline{BW1}$	D0–D8	D9–D17
1	1	Don't Care	Don't Care
0	1	Data In	Don't Care
1	0	Don't Care	Data In
0	0	Data In	Data In

x9 Byte Write Enable ($\overline{BWn}$) Truth Table

$\overline{BW0}$	D0–D8
1	Don't Care
0	Data In
1	Don't Care
0	Data In

x8 Nybble Write Enable ($\overline{NWn}$) Truth Table

$\overline{NW0}$	$\overline{NW1}$	D0–D3	D4–D7
1	1	Don't Care	Don't Care
0	1	Data In	Don't Care
1	0	Don't Care	Data In
0	0	Data In	Data In

 © 2011, GSI Technology

Specifications cited are subject to change without notice. For latest documentation see http://www.gsitechnology.com.

Absolute Maximum Ratings

(All voltages reference to V_{SS})

Symbol	Description	Value	Unit
V_{DD}	Voltage on V_{DD} Pins	–0.5 to 2.9	V
V_{DDQ}	Voltage in V_{DDQ} Pins	–0.5 to V_{DD}	V
V_{REF}	Voltage in V_{REF} Pins	–0.5 to V_{DDQ}	V
$V_{I/O}$	Voltage on I/O Pins	–0.5 to V_{DDQ} +0.5 (≤ 2.9 V max.)	V
V_{IN}	Input Voltage (Address, Control, Data, Clock)	–0.5 to V_{DDQ} +0.5 (≤ 2.9 V max.)	V
V_{TIN}	Input Voltage (TCK, TMS, TDI)	–0.5 to V_{DDQ} +0.5 (≤ 2.9 V max.)	V
I_{IN}	Input Current on Any Pin	+/–100	mA dc
I_{OUT}	Output Current on Any I/O Pin	+/–100	mA dc
T_J	Maximum Junction Temperature	125	^oC
T_{STG}	Storage Temperature	–55 to 125	^oC

Note:
Permanent damage to the device may occur if the Absolute Maximum Ratings are exceeded. Operation should be restricted to Recommended Operating Conditions. Exposure to conditions exceeding the Recommended Operating Conditions, for an extended period of time, may affect reliability of this component.

Recommended Operating Conditions

Power Supplies

Parameter	Symbol	Min.	Typ.	Max.	Unit
Supply Voltage	V_{DD}	1.7	1.8	1.9	V
I/O Supply Voltage	V_{DDQ}	1.4	—	V_{DD}	V
Reference Voltage	V_{REF}	V_{DDQ}/2 – 0.05	—	V_{DDQ}/2 + 0.05	V

Note:
The power supplies need to be powered up simultaneously or in the following sequence: V_{DD}, V_{DDQ}, V_{REF}, followed by signal inputs. The power down sequence must be the reverse. V_{DDQ} must not exceed V_{DD}. For more information, read AN1021 SigmaQuad and SigmaDDR Power-Up.

Operating Temperature

Parameter	Symbol	Min.	Typ.	Max.	Unit
Junction Temperature (Commercial Range Versions)	T_J	0	25	85	°C
Junction Temperature (Industrial Range Versions)*	T_J	–40	25	100	°C

Note:
* The part numbers of Industrial Temperature Range versions end with the character "I". Unless otherwise noted, all performance specifications quoted are evaluated for worst case in the temperature range marked on the device.

 © 2011, GSI Technology
Specifications cited are subject to change without notice. For latest documentation see http://www.gsitechnology.com.

Thermal Impedance

Package	Test PCB Substrate	θ JA (C°/W) Airflow = 0 m/s	θ JA (C°/W) Airflow = 1 m/s	θ JA (C°/W) Airflow = 2 m/s	θ JB (C°/W)	θ JC (C°/W)
165 BGA	4-layer	19.0	16.3	15.3	7.7	2.5

Notes:
1. Thermal Impedance data is based on a number of of samples from mulitple lots and should be viewed as a typical number.
2. Please refer to JEDEC standard JESD51-6.
3. The characteristics of the test fixture PCB influence reported thermal characteristics of the device. Be advised that a good thermal path to the PCB can result in cooling or heating of the RAM depending on PCB temperature.

HSTL I/O DC Input Characteristics

Parameter	Symbol	Min	Max	Units	Notes
Input Reference Voltage	V_{REF}	V_{DDQ} /2 – 0.05	V_{DDQ} /2 + 0.05	V	—
Input High Voltage	V_{IH1}	V_{REF} + 0.1	V_{DDQ} + 0.3	V	1
Input Low Voltage	V_{IL1}	–0.3	V_{REF} – 0.1	V	1
Input High Voltage	V_{IH2}	0.7 * V_{DDQ}	V_{DDQ} + 0.3	V	2,3
Input Low Voltage	V_{IL2}	–0.3	0.3 * V_{DDQ}	V	2,3

Notes:
1. Parameters apply to K, $\overline{K}$, SA, D, $\overline{R}$, $\overline{W}$, $\overline{BW}$ during normal operation and JTAG boundary scan testing.
2. Parameters apply to $\overline{Doff}$, ODT during normal operation and JTAG boundary scan testing.
3. Parameters apply to ZQ during JTAG boundary scan testing only.

HSTL I/O AC Input Characteristics

Parameter	Symbol	Min	Max	Units	Notes
Input Reference Voltage	V_{REF}	V_{DDQ} /2 – 0.08	V_{DDQ} /2 + 0.08	V	—
Input High Voltage	V_{IH1}	V_{REF} + 0.2	V_{DDQ} + 0.5	V	1,2,3
Input Low Voltage	V_{IL1}	–0.5	V_{REF} – 0.2	V	1,2,3
Input High Voltage	V_{IH2}	V_{DDQ} – 0.2	V_{DDQ} + 0.5	V	4,5
Input Low Voltage	V_{IL2}	–0.5	0.2	V	4,5

Notes:
1. $V_{IH(MAX)}$ and $V_{IL(MIN)}$ apply for pulse widths less than one-quarter of the cycle time.
2. Input rise and fall times must be a minimum of 1 V/ns, and within 10% of each other.
3. Parameters apply to K, $\overline{K}$, SA, D, $\overline{R}$, $\overline{W}$, $\overline{BW}$ during normal operation and JTAG boundary scan testing.
4. Parameters apply to $\overline{Doff}$, ODT during normal operation and JTAG boundary scan testing.
5. Parameters apply to ZQ during JTAG boundary scan testing only.

 © 2011, GSI Technology
Specifications cited are subject to change without notice. For latest documentation see http://www.gsitechnology.com.

Capacitance

(T_A = 25°C, f = 1 MHz, V_{DD} = 1.8 V)

Parameter	Symbol	Test conditions	Typ.	Max.	Unit
Input Capacitance	C_{IN}	V_{IN} = 0 V	4	5	pF
Output Capacitance	C_{OUT}	V_{OUT} = 0 V	6	7	pF
Clock Capacitance	C_{CLK}	V_{IN} = 0 V	5	6	pF

Note:
This parameter is sample tested.

AC Test Conditions

Parameter	Conditions
Input high level	1.25
Input low level	0.25 V
Max. input slew rate	2 V/ns
Input reference level	0.75
Output reference level	$V_{DDQ}/2$

Note:
Test conditions as specified with output loading as shown unless otherwise noted.

AC Test Load Diagram

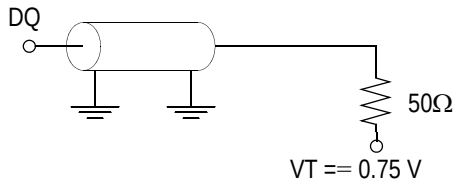

RQ = 250 Ω (HSTL I/O)
V_{REF} = 0.75 V

Input and Output Leakage Characteristics

Parameter	Symbol	Test Conditions	Min.	Max
Input Leakage Current (except mode pins)	I_{IL}	V_{IN} = 0 to V_{DD}	–2 uA	2 uA
$\overline{Doff}$	$I_{IL\overline{DOFF}}$	V_{IN} = 0 to V_{DD}	–2 uA	100 uA
ODT	$I_{IL\ ODT}$	V_{IN} = 0 to V_{DD}	–2 uA	100 uA
Output Leakage Current	I_{OL}	Output Disable, V_{OUT} = 0 to V_{DDQ}	–2 uA	2 uA

 © 2011, GSI Technology
Specifications cited are subject to change without notice. For latest documentation see http://www.gsitechnology.com.

Programmable Impedance HSTL Output Driver DC Electrical Characteristics

Parameter	Symbol	Min.	Max.	Units	Notes
Output High Voltage	V_{OH1}	$V_{DDQ}/2 - 0.12$	$V_{DDQ}/2 + 0.12$	V	1, 3
Output Low Voltage	V_{OL1}	$V_{DDQ}/2 - 0.12$	$V_{DDQ}/2 + 0.12$	V	2, 3
Output High Voltage	V_{OH2}	$V_{DDQ} - 0.2$	V_{DDQ}	V	4, 5
Output Low Voltage	V_{OL2}	Vss	0.2	V	4, 6

Notes:
1. $I_{OH} = (V_{DDQ}/2) / (RQ/5)$ +/– 15% @ $V_{OH} = V_{DDQ}/2$ (for: $175\Omega \leq RQ \leq 350\Omega$).
2. $I_{OL} = (V_{DDQ}/2) / (RQ/5)$ +/– 15% @ $V_{OL} = V_{DDQ}/2$ (for: $175\Omega \leq RQ \leq 350\Omega$).
3. Parameter tested with RQ = 250Ω and V_{DDQ} = 1.5 V
4. $0\Omega \leq RQ \leq \infty\Omega$
5. I_{OH} = –1.0 mA
6. I_{OL} = 1.0 mA

Operating Currents

Parameter	Symbol	Test Conditions	-357		-333		-300		-250		-200		Notes
			0 to 70°C	–40 to 85°C	0 to 70°C	–40 to 85°C	0 to 70°C	–40 to 85°C	0 to 70°C	–40 to 85°C	0 to 70°C	–40 to 85°C	
Operating Current (x36): DDR	I_{DD}	V_{DD} = Max, I_{OUT} = 0 mA Cycle Time ≥ t_{KHKH} Min	1095 mA	1105 mA	1010 mA	1020 mA	885 mA	895 mA	765 mA	775 mA	640 mA	650 mA	2, 3
Operating Current (x18): DDR	I_{DD}	V_{DD} = Max, I_{OUT} = 0 mA Cycle Time ≥ t_{KHKH} Min	945 mA	955 mA	885 mA	895 mA	775 mA	785 mA	665 mA	675 mA	555 mA	565 mA	2, 3
Operating Current (x9): DDR	I_{DD}	V_{DD} = Max, I_{OUT} = 0 mA Cycle Time ≥ t_{KHKH} Min	945 mA	955 mA	885 mA	895 mA	775 mA	785 mA	665 mA	675 mA	555 mA	565 mA	2, 3
Operating Current (x8): DDR	I_{DD}	V_{DD} = Max, I_{OUT} = 0 mA Cycle Time ≥ t_{KHKH} Min	945 mA	955 mA	885 mA	895 mA	775 mA	785 mA	665 mA	675 mA	555 mA	565 mA	2, 3
Standby Current (NOP): DDR	I_{SB1}	Device deselected, I_{OUT} = 0 mA, f = Max, All Inputs ≤ 0.2 V or ≥ V_{DD} – 0.2 V	245 mA	255 mA	235 mA	245 mA	225 mA	235 mA	205 mA	215 mA	190 mA	200 mA	2, 4

Notes:
1. Power measured with output pins floating.
2. Minimum cycle, I_{OUT} = 0 mA
3. Operating current is calculated with 50% read cycles and 50% write cycles.
4. Standby Current is only after all pending read and write burst operations are completed.

 © 2011, GSI Technology

Specifications cited are subject to change without notice. For latest documentation see http://www.gsitechnology.com.

AC Electrical Characteristics

Parameter	Symbol	-357		-333		-300		-250		-200		Units	Notes
		Min	Max	Min	Max	Min	Max	Min	Max	Min	Max		
Clock													
K, $\overline{K}$ Clock Cycle Time	t_{KHKH}	2.8	8.4	3.0	8.4	3.3	8.4	4.0	8.4	5.0	8.4	ns	
tK Variable	t_{KVar}	—	0.2	—	0.2	—	0.2	—	0.2	—	0.2	ns	4
K, $\overline{K}$ Clock High Pulse Width	t_{KHKL}	1.12	—	1.2	—	1.32	—	1.6	—	2.0	—	ns	
K, $\overline{K}$ Clock Low Pulse Width	t_{KLKH}	1.12	—	1.2	—	1.32	—	1.6	—	2.0	—	ns	
K to $\overline{K}$ High	$t_{KH\overline{K}H}$	1.26	—	1.28	—	1.49	—	1.8	—	2.2	—	ns	
$\overline{K}$ to K High	$t_{\overline{K}HKH}$	1.26	—	1.28	—	1.49	—	1.8	—	2.2	—	ns	
DLL Lock Time	t_{KCLock}	2048	—	2048	—	2048	—	2048	—	2048	—	cycle	5
K Static to DLL reset	$t_{KCReset}$	30	—	30	—	30	—	30	—	30	—	ns	
Output Times													
K, $\overline{K}$ Clock High to Data Output Valid	t_{KHQV}	—	0.45	—	0.45	—	0.45	—	0.45	—	0.45	ns	
K, $\overline{K}$ Clock High to Data Output Hold	t_{KHQX}	–0.45	—	–0.45	—	–0.45	—	–0.45	—	–0.45	—	ns	
K, $\overline{K}$ Clock High to Echo Clock Valid	t_{KHCQV}	—	0.45	—	0.45	—	0.45	—	0.45	—	0.45	ns	
K, $\overline{K}$ Clock High to Echo Clock Hold	t_{KHCQX}	–0.45	—	–0.45	—	–0.45	—	–0.45	—	–0.45	—	ns	
CQ, $\overline{CQ}$ High Output Valid	t_{CQHQV}	—	0.23	—	0.25	—	0.27	—	0.30	—	0.35	ns	
CQ, $\overline{CQ}$ High Output Hold	t_{CQHQX}	–0.23	—	–0.25	—	–0.27	—	–0.30	—	–0.35	—	ns	
CQ, $\overline{CQ}$ High to QVLD	t_{QVLD}	–0.23	0.23	–0.25	0.25	–0.27	0.27	–0.30	0.30	–0.35	0.35	ns	
CQ Phase Distortion	$t_{CQH\overline{CQ}H}$ $t_{\overline{CQ}HCQH}$	1.00	—	1.10	—	1.24	—	1.55	—	1.95	—	ns	
K Clock High to Data Output High-Z	t_{KHQZ}	—	0.45	—	0.45	—	0.45	—	0.45	—	0.45	ns	
K Clock High to Data Output Low-Z	t_{KHQX1}	–0.45	—	–0.45	—	–0.45	—	–0.45	—	–0.45	—	ns	
Setup Times													
Address Input Setup Time	t_{AVKH}	0.28	—	0.28	—	0.30	—	0.35	—	0.4	—	ns	1
Control Input Setup Time ($\overline{R}$, $\overline{W}$)	t_{IVKH}	0.28	—	0.28	—	0.30	—	0.35	—	0.4	—	ns	2
Control Input Setup Time ($\overline{BWX}$) ($\overline{BWX}$)	t_{IVKH}	0.28	—	0.28	—	0.30	—	0.35	—	0.4	—	ns	3
Data Input Setup Time	t_{DVKH}	0.28	—	0.28	—	0.30	—	0.35	—	0.4	—	ns	
Hold Times													
Address Input Hold Time	t_{KHAX}	0.28	—	0.28	—	0.30	—	0.35	—	0.4	—	ns	1
Control Input Hold Time ($\overline{R}$, $\overline{W}$)	t_{KHIX}	0.28	—	0.28	—	0.30	—	0.35	—	0.4	—	ns	2
Control Input Hold Time ($\overline{BWX}$) ($\overline{BWX}$)	t_{KHIX}	0.28	—	0.28	—	0.30	—	0.35	—	0.4	—	ns	3
Data Input Hold Time	t_{KHDX}	0.28	—	0.28	—	0.30	—	0.35	—	0.4	—	ns	

Notes:

1. All Address inputs must meet the specified setup and hold times for all latching clock edges.
2. Control signals are $\overline{R}$, $\overline{W}$
3. Control signals are $\overline{BW0}$, $\overline{BW1}$, and ($\overline{NW0}$, $\overline{NW1}$ for x8) and ($\overline{BW2}$, $\overline{BW3}$ for x36).
4. Clock phase jitter is the variance from clock rising edge to the next expected clock rising edge.
5. V_{DD} slew rate must be less than 0.1 V DC per 50 ns for DLL lock retention. DLL lock time begins once V_{DD} and input clock are stable.

 © 2011, GSI Technology

Specifications cited are subject to change without notice. For latest documentation see http://www.gsitechnology.com.

Read NOP CQ-Based Timing Diagram

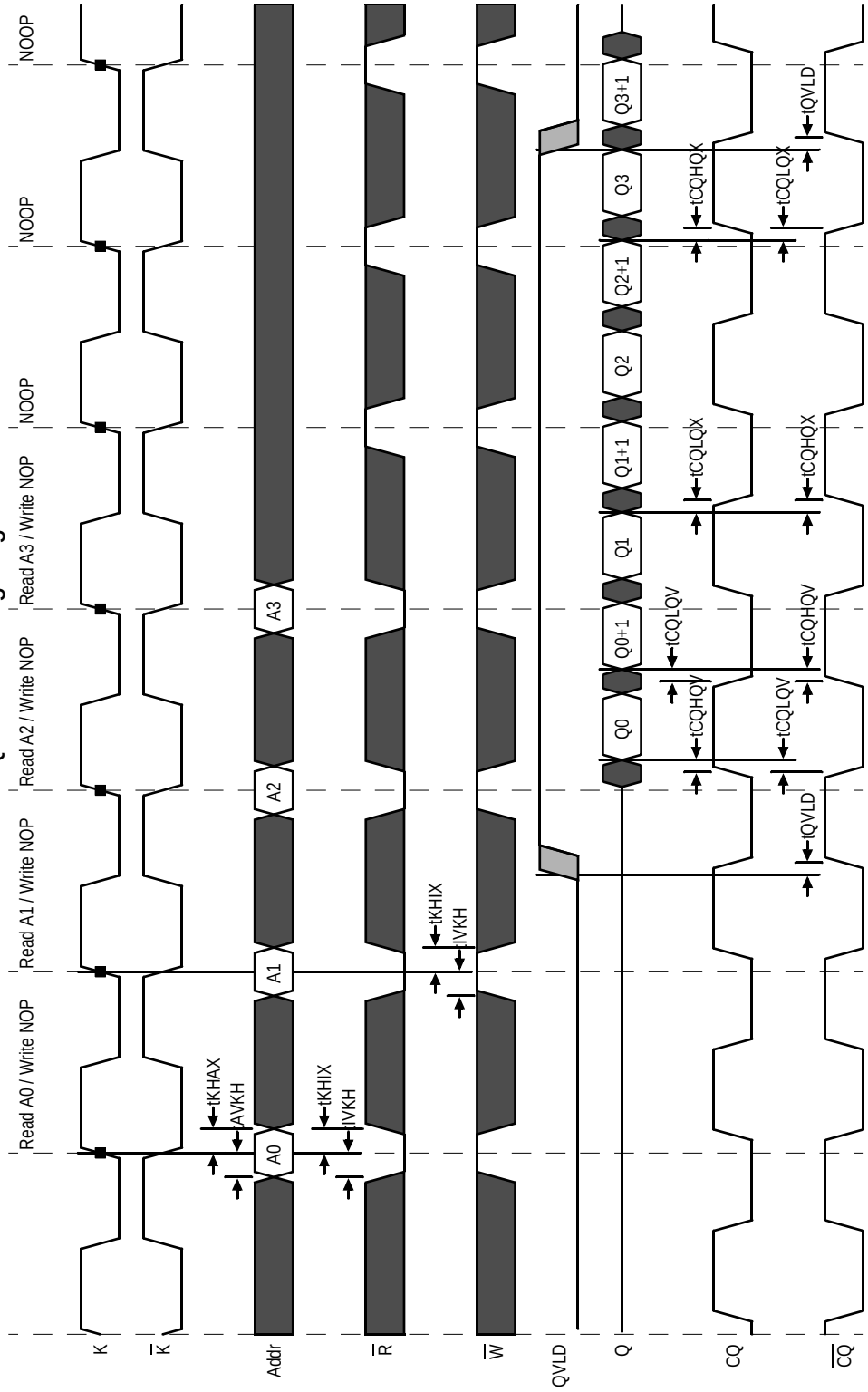

 © 2011, GSI Technology

Specifications cited are subject to change without notice. For latest documentation see http://www.gsitechnology.com.

Read-Write CQ-Based Timing Diagram

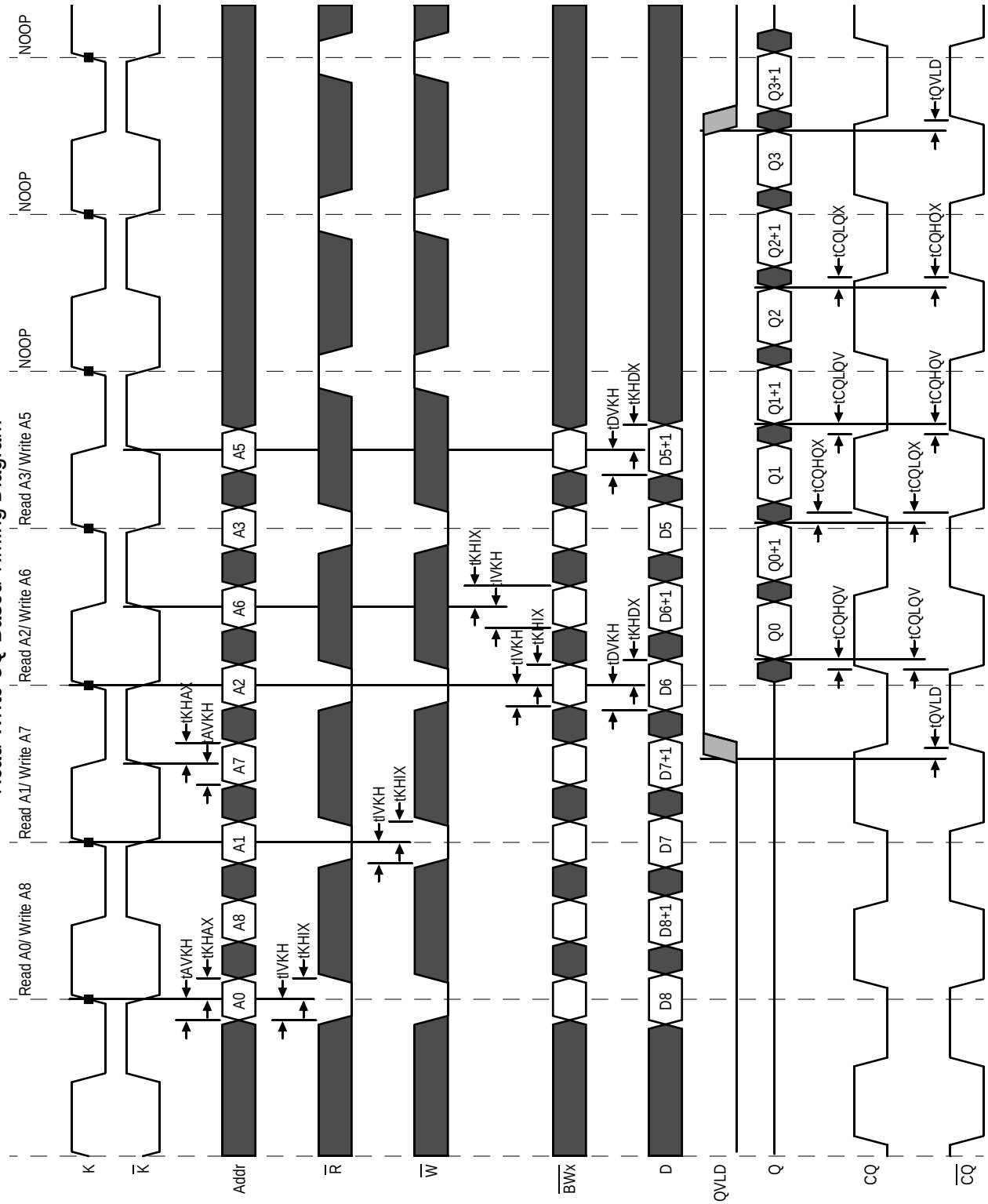

 © 2011, GSI Technology

Specifications cited are subject to change without notice. For latest documentation see http://www.gsitechnology.com.

Write NOP Timing Diagram

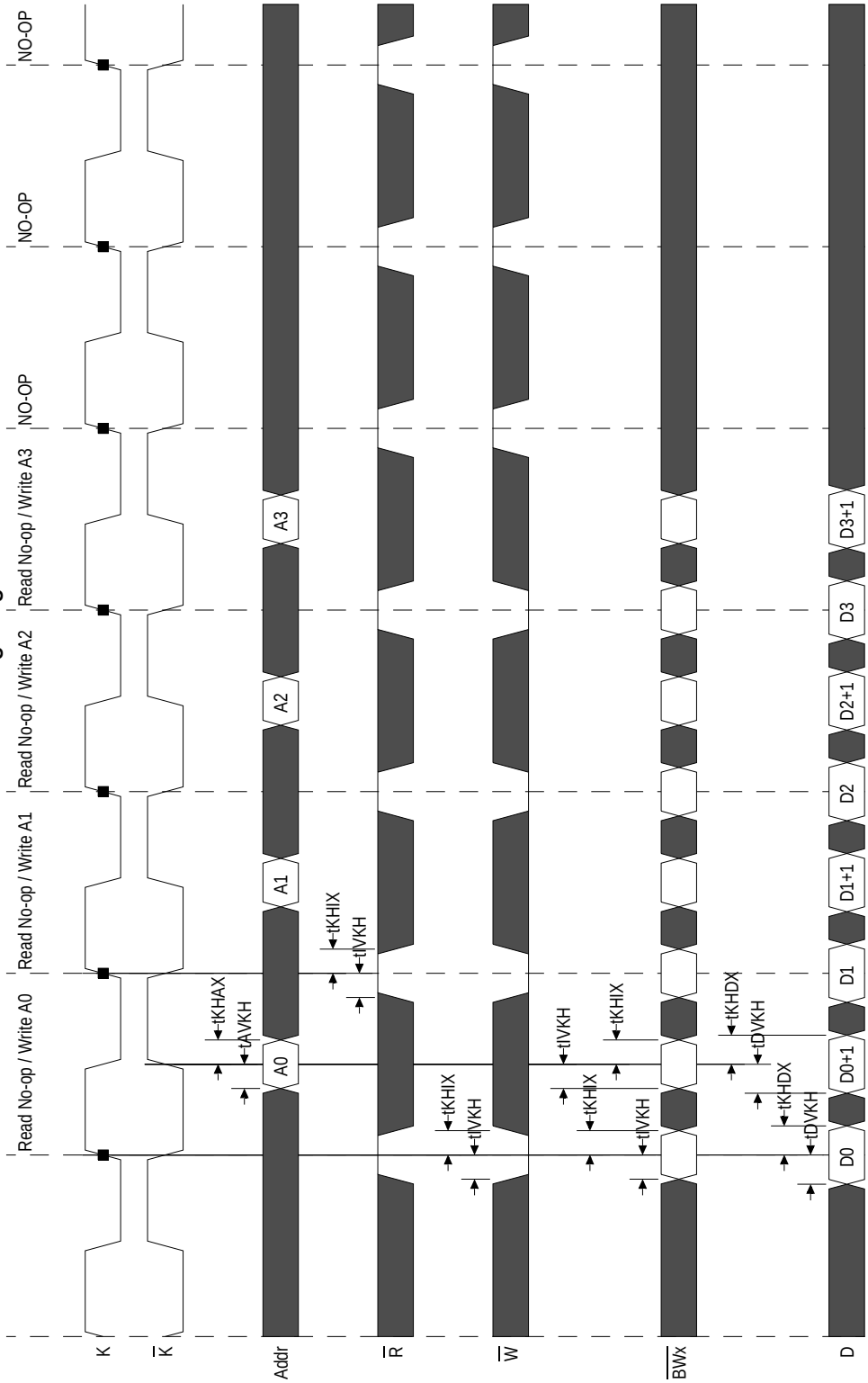

 © 2011, GSI Technology

Specifications cited are subject to change without notice. For latest documentation see http://www.gsitechnology.com.

JTAG Port Operation

Overview

The JTAG Port on this RAM operates in a manner that is compliant with IEEE Standard 1149.1-1990, a serial boundary scan interface standard (commonly referred to as JTAG). The JTAG Port input interface levels scale with V_{DD}. The JTAG output drivers are powered by V_{DD}.

Disabling the JTAG Port

It is possible to use this device without utilizing the JTAG port. The port is reset at power-up and will remain inactive unless clocked. TCK, TDI, and TMS are designed with internal pull-up circuits.To assure normal operation of the RAM with the JTAG Port unused, TCK, TDI, and TMS may be left floating or tied to either V_{DD} or V_{SS}. TDO should be left unconnected.

JTAG Pin Descriptions

Pin	Pin Name	I/O	Description
TCK	Test Clock	In	Clocks all TAP events. All inputs are captured on the rising edge of TCK and all outputs propagate from the falling edge of TCK.
TMS	Test Mode Select	In	The TMS input is sampled on the rising edge of TCK. This is the command input for the TAP controller state machine. An undriven TMS input will produce the same result as a logic one input level.
TDI	Test Data In	In	The TDI input is sampled on the rising edge of TCK. This is the input side of the serial registers placed between TDI and TDO. The register placed between TDI and TDO is determined by the state of the TAP Controller state machine and the instruction that is currently loaded in the TAP Instruction Register (refer to the TAP Controller State Diagram). An undriven TDI pin will produce the same result as a logic one input level.
TDO	Test Data Out	Out	Output that is active depending on the state of the TAP state machine. Output changes in response to the falling edge of TCK. This is the output side of the serial registers placed between TDI and TDO.

Note:
This device does not have a TRST (TAP Reset) pin. TRST is optional in IEEE 1149.1. The Test-Logic-Reset state is entered while TMS is held high for five rising edges of TCK. The TAP Controller is also reset automaticly at power-up.

JTAG Port Registers

Overview

The various JTAG registers, refered to as Test Access Port or TAP Registers, are selected (one at a time) via the sequences of 1s and 0s applied to TMS as TCK is strobed. Each of the TAP Registers is a serial shift register that captures serial input data on the rising edge of TCK and pushes serial data out on the next falling edge of TCK. When a register is selected, it is placed between the TDI and TDO pins.

Instruction Register

The Instruction Register holds the instructions that are executed by the TAP controller when it is moved into the Run, Test/Idle, or the various data register states. Instructions are 3 bits long. The Instruction Register can be loaded when it is placed between the TDI and TDO pins. The Instruction Register is automatically preloaded with the IDCODE instruction at power-up or whenever the controller is placed in Test-Logic-Reset state.

Bypass Register

The Bypass Register is a single bit register that can be placed between TDI and TDO. It allows serial test data to be passed through the RAM's JTAG Port to another device in the scan chain with as little delay as possible.

Boundary Scan Register

The Boundary Scan Register is a collection of flip flops that can be preset by the logic level found on the RAM's input or I/O pins. The flip flops are then daisy chained together so the levels found can be shifted serially out of the JTAG Port's TDO pin. The Boundary Scan Register also includes a number of place holder flip flops (always set to a logic 1). The relationship between the device pins and the bits in the Boundary Scan Register is described in the Scan Order Table following. The Boundary Scan

 © 2011, GSI Technology
Specifications cited are subject to change without notice. For latest documentation see http://www.gsitechnology.com.

Register, under the control of the TAP Controller, is loaded with the contents of the RAMs I/O ring when the controller is in Capture-DR state and then is placed between the TDI and TDO pins when the controller is moved to Shift-DR state. SAMPLE-Z, SAMPLE/PRELOAD and EXTEST instructions can be used to activate the Boundary Scan Register.

JTAG TAP Block Diagram

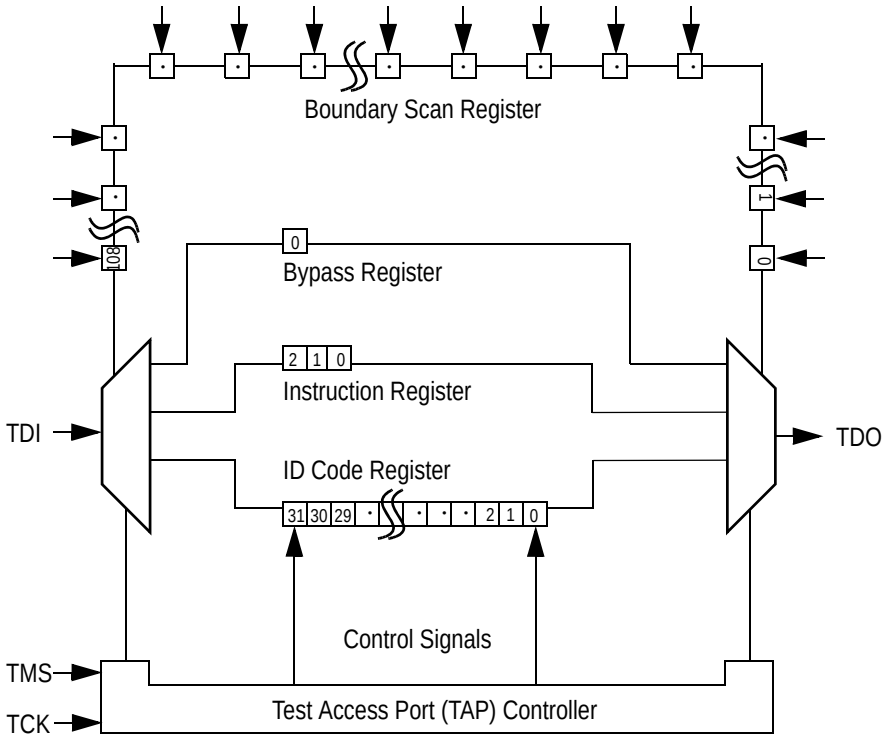

Identification (ID) Register

The ID Register is a 32-bit register that is loaded with a device and vendor specific 32-bit code when the controller is put in Capture-DR state with the IDCODE command loaded in the Instruction Register. The code is loaded from a 32-bit on-chip ROM. It describes various attributes of the RAM as indicated below. The register is then placed between the TDI and TDO pins when the controller is moved into Shift-DR state. Bit 0 in the register is the LSB and the first to reach TDO when shifting begins.

ID Register Contents

	See BSDL Model																				GSI Technology JEDEC Vendor ID Code											Presence Register
Bit #	31	30	29	28	27	26	25	24	23	22	21	20	19	18	17	16	15	14	13	12	11	10	9	8	7	6	5	4	3	2	1	0
	X	X	X	X	X	X	X	X	X	X	X	X	X	X	X	X	X	X	X	X	0	0	0	1	1	0	1	1	0	0	1	1

 © 2011, GSI Technology

Specifications cited are subject to change without notice. For latest documentation see http://www.gsitechnology.com.

Tap Controller Instruction Set

Overview

There are two classes of instructions defined in the Standard 1149.1-1990; the standard (Public) instructions, and device specific (Private) instructions. Some Public instructions are mandatory for 1149.1 compliance. Optional Public instructions must be implemented in prescribed ways. The TAP on this device may be used to monitor all input and I/O pads, and can be used to load address, data or control signals into the RAM or to preload the I/O buffers.

When the TAP controller is placed in Capture-IR state the two least significant bits of the instruction register are loaded with 01. When the controller is moved to the Shift-IR state the Instruction Register is placed between TDI and TDO. In this state the desired instruction is serially loaded through the TDI input (while the previous contents are shifted out at TDO). For all instructions, the TAP executes newly loaded instructions only when the controller is moved to Update-IR state. The TAP instruction set for this device is listed in the following table.

JTAG Tap Controller State Diagram

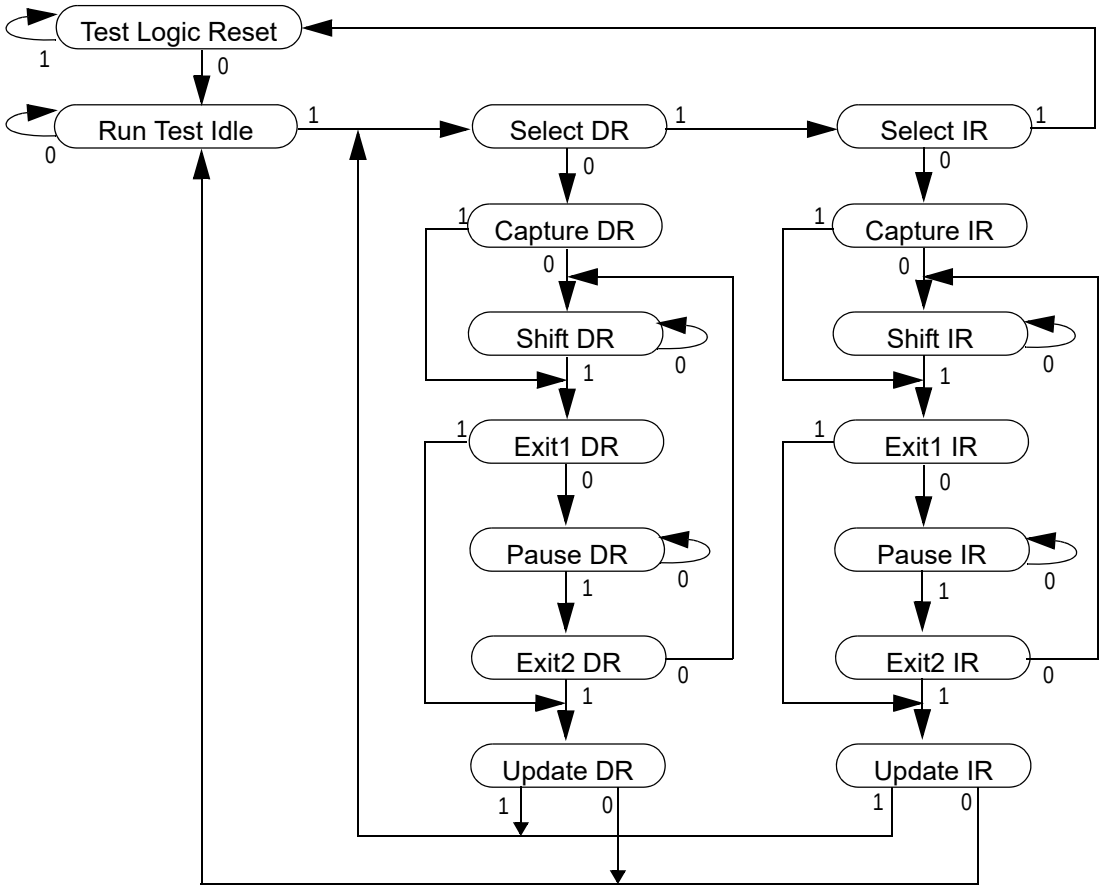

Instruction Descriptions

BYPASS

When the BYPASS instruction is loaded in the Instruction Register the Bypass Register is placed between TDI and TDO. This occurs when the TAP controller is moved to the Shift-DR state. This allows the board level scan path to be shortened to facilitate testing of other devices in the scan path.

SAMPLE/PRELOAD

SAMPLE/PRELOAD is a Standard 1149.1 mandatory public instruction. When the SAMPLE / PRELOAD instruction is

 © 2011, GSI Technology

Specifications cited are subject to change without notice. For latest documentation see http://www.gsitechnology.com.

loaded in the Instruction Register, moving the TAP controller into the Capture-DR state loads the data in the RAMs input and I/O buffers into the Boundary Scan Register. Boundary Scan Register locations are not associated with an input or I/O pin, and are loaded with the default state identified in the Boundary Scan Chain table at the end of this section of the datasheet. Because the RAM clock is independent from the TAP Clock (TCK) it is possible for the TAP to attempt to capture the I/O ring contents while the input buffers are in transition (i.e. in a metastable state). Although allowing the TAP to sample metastable inputs will not harm the device, repeatable results cannot be expected. RAM input signals must be stabilized for long enough to meet the TAPs input data capture set-up plus hold time (tTS plus tTH). The RAMs clock inputs need not be paused for any other TAP operation except capturing the I/O ring contents into the Boundary Scan Register. Moving the controller to Shift-DR state then places the boundary scan register between the TDI and TDO pins.

EXTEST

EXTEST is an IEEE 1149.1 mandatory public instruction. It is to be executed whenever the instruction register is loaded with all logic 0s. The EXTEST command does not block or override the RAM's input pins; therefore, the RAM's internal state is still determined by its input pins.

Typically, the Boundary Scan Register is loaded with the desired pattern of data with the SAMPLE/PRELOAD command. Then the EXTEST command is used to output the Boundary Scan Register's contents, in parallel, on the RAM's data output drivers on the falling edge of TCK when the controller is in the Update-IR state.

Alternately, the Boundary Scan Register may be loaded in parallel using the EXTEST command. When the EXTEST instruction is selected, the sate of all the RAM's input and I/O pins, as well as the default values at Scan Register locations not associated with a pin, are transferred in parallel into the Boundary Scan Register on the rising edge of TCK in the Capture-DR state, the RAM's output pins drive out the value of the Boundary Scan Register location with which each output pin is associated.

IDCODE

The IDCODE instruction causes the ID ROM to be loaded into the ID register when the controller is in Capture-DR mode and places the ID register between the TDI and TDO pins in Shift-DR mode. The IDCODE instruction is the default instruction loaded in at power up and any time the controller is placed in the Test-Logic-Reset state.

SAMPLE-Z

If the SAMPLE-Z instruction is loaded in the instruction register, all RAM outputs are forced to an inactive drive state (high-Z) and the Boundary Scan Register is connected between TDI and TDO when the TAP controller is moved to the Shift-DR state.

JTAG TAP Instruction Set Summary

Instruction	Code	Description	Notes
EXTEST	000	Places the Boundary Scan Register between TDI and TDO.	1
IDCODE	001	Preloads ID Register and places it between TDI and TDO.	1, 2
SAMPLE-Z	010	Captures I/O ring contents. Places the Boundary Scan Register between TDI and TDO. Forces all RAM output drivers to High-Z.	1
GSI	011	GSI private instruction.	1
SAMPLE/PRELOAD	100	Captures I/O ring contents. Places the Boundary Scan Register between TDI and TDO.	1
GSI	101	GSI private instruction.	1
GSI	110	GSI private instruction.	1
BYPASS	111	Places Bypass Register between TDI and TDO.	1

Notes:

1. Instruction codes expressed in binary, MSB on left, LSB on right.
2. Default instruction automatically loaded at power-up and in test-logic-reset state.

 © 2011, GSI Technology

Specifications cited are subject to change without notice. For latest documentation see http://www.gsitechnology.com.

JTAG Port Recommended Operating Conditions and DC Characteristics

Parameter	Symbol	Min.	Max.	Unit	Notes
Test Port Input Low Voltage	V_{ILJ}	–0.3	0.3 * V_{DD}	V	1
Test Port Input High Voltage	V_{IHJ}	0.7 * V_{DD}	V_{DD} +0.3	V	1
TMS, TCK and TDI Input Leakage Current	I_{INHJ}	–300	1	uA	2
TMS, TCK and TDI Input Leakage Current	I_{INLJ}	–1	100	uA	3
TDO Output Leakage Current	I_{OLJ}	–1	1	uA	4
Test Port Output High Voltage	V_{OHJ}	V_{DD} – 0.2	—	V	5, 6
Test Port Output Low Voltage	V_{OLJ}	—	0.2	V	5, 7
Test Port Output CMOS High	V_{OHJC}	V_{DD} – 0.1	—	V	5, 8
Test Port Output CMOS Low	V_{OLJC}	—	0.1	V	5, 9

Notes:
1. Input Under/overshoot voltage must be –1 V < Vi < V_{DDn} +1 V not to exceed V maximum, with a pulse width not to exceed 20% tTKC.
2. $V_{ILJ} \leq V_{IN} \leq V_{DDn}$
3. $0\ V \leq V_{IN} \leq V_{ILJn}$
4. Output Disable, V_{OUT} = 0 to V_{DDn}
5. The TDO output driver is served by the V_{DD} supply.
6. I_{OHJ} = –2 mA
7. I_{OLJ} = + 2 mA
8. I_{OHJC} = –100 uA
9. I_{OLJC} = +100 uA

JTAG Port AC Test Conditions

Parameter	Conditions
Input high level	V_{DD} – 0.2 V
Input low level	0.2 V
Input slew rate	1 V/ns
Input reference level	V_{DD}/2
Output reference level	V_{DD}/2

JTAG Port AC Test Load

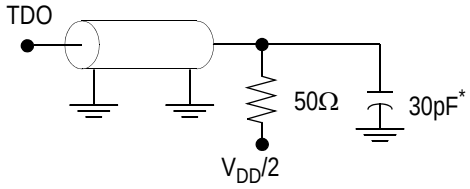

* Distributed Test Jig Capacitance

Notes:
1. Include scope and jig capacitance.
2. Test conditions as shown unless otherwise noted.

 © 2011, GSI Technology

Specifications cited are subject to change without notice. For latest documentation see http://www.gsitechnology.com.

JTAG Port Timing Diagram

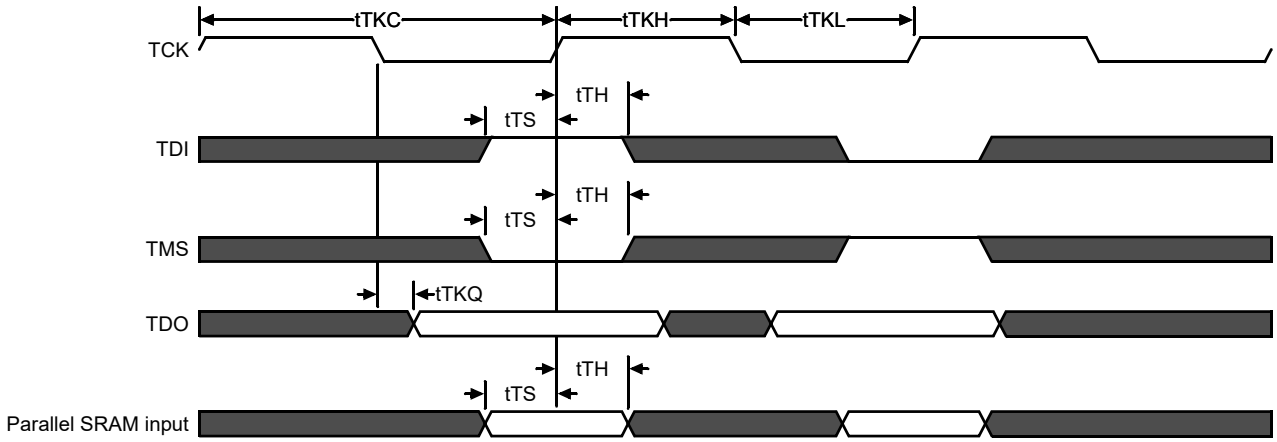

JTAG Port AC Electrical Characteristics

Parameter	Symbol	Min	Max	Unit
TCK Cycle Time	tTKC	50	—	ns
TCK Low to TDO Valid	tTKQ	—	20	ns
TCK High Pulse Width	tTKH	20	—	ns
TCK Low Pulse Width	tTKL	20	—	ns
TDI & TMS Set Up Time	tTS	10	—	ns
TDI & TMS Hold Time	tTH	10	—	ns

 © 2011, GSI Technology

Specifications cited are subject to change without notice. For latest documentation see http://www.gsitechnology.com.

Package Dimensions—165-Bump FPBGA (Package D)

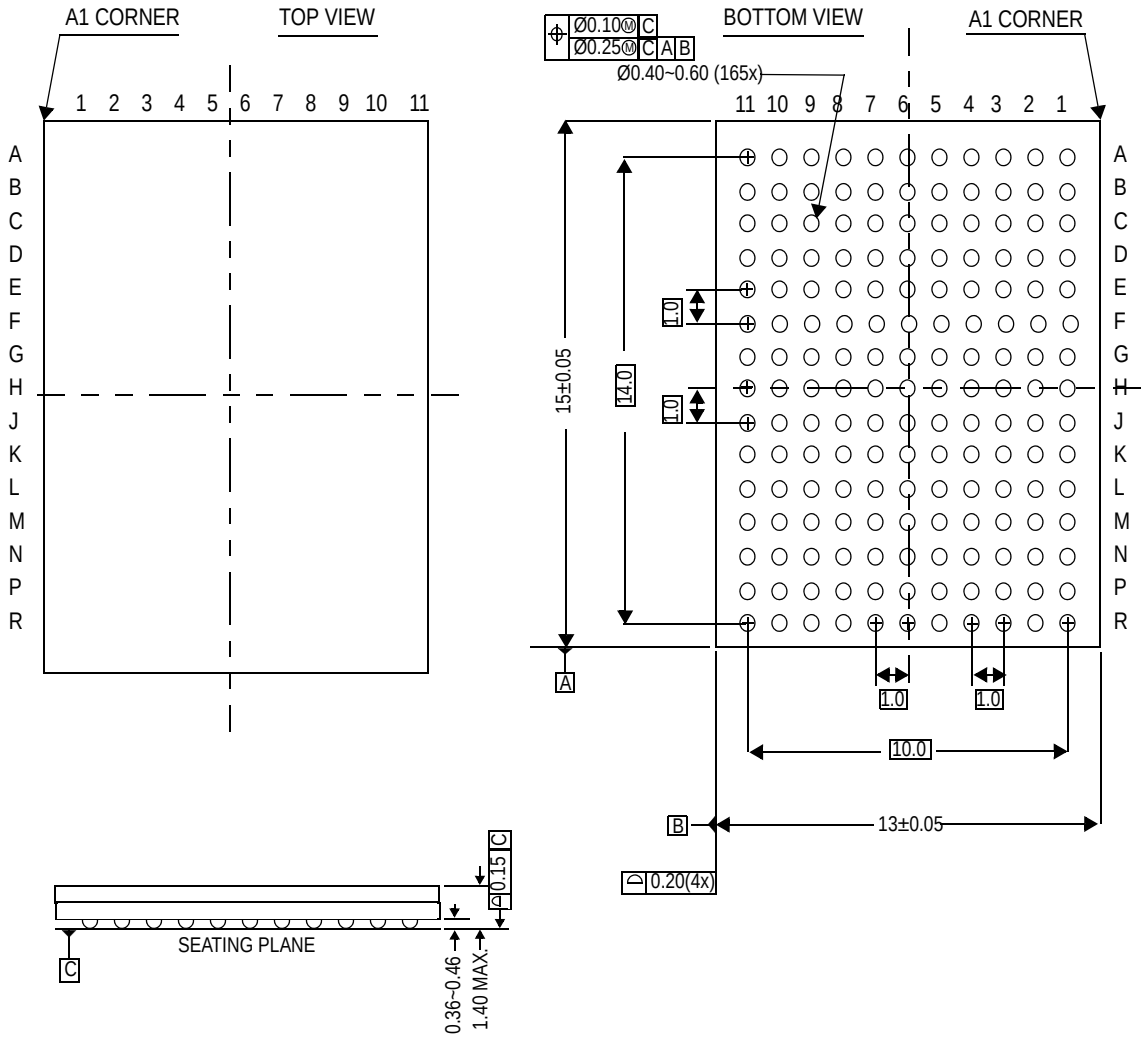

 © 2011, GSI Technology

Specifications cited are subject to change without notice. For latest documentation see http://www.gsitechnology.com.

Ordering Information—GSI SigmaQuad-II+ SRAM

Org	Part Number[1]	Type	Package	Speed (MHz)	T_A[2]
4M x 8	GS8342Q07BD-357	SigmaQuad-II+ B2 SRAM	165-bump BGA	357	C
4M x 8	GS8342Q07BD-333	SigmaQuad-II+ B2 SRAM	165-bump BGA	333	C
4M x 8	GS8342Q07BD-300	SigmaQuad-II+ B2 SRAM	165-bump BGA	300	C
4M x 8	GS8342Q07BD-250	SigmaQuad-II+ B2 SRAM	165-bump BGA	250	C
4M x 8	GS8342Q07BD-200	SigmaQuad-II+ B2 SRAM	165-bump BGA	200	C
4M x 8	GS8342Q07BD-357I	SigmaQuad-II+ B2 SRAM	165-bump BGA	357	I
4M x 8	GS8342Q07BD-333I	SigmaQuad-II+ B2 SRAM	165-bump BGA	333	I
4M x 8	GS8342Q07BD-300I	SigmaQuad-II+ B2 SRAM	165-bump BGA	300	I
4M x 8	GS8342Q07BD-250I	SigmaQuad-II+ B2 SRAM	165-bump BGA	250	I
4M x 8	GS8342Q07BD-200I	SigmaQuad-II+ B2 SRAM	165-bump BGA	200	I
4M x 8	GS8342Q07BGD-357	SigmaQuad-II+ B2 SRAM	RoHS-compliant 165-bump BGA	357	C
4M x 8	GS8342Q07BGD-333	SigmaQuad-II+ B2 SRAM	RoHS-compliant 165-bump BGA	333	C
4M x 8	GS8342Q07BGD-300	SigmaQuad-II+ B2 SRAM	RoHS-compliant 165-bump BGA	300	C
4M x 8	GS8342Q07BGD-250	SigmaQuad-II+ B2 SRAM	RoHS-compliant 165-bump BGA	250	C
4M x 8	GS8342Q07BGD-200	SigmaQuad-II+ B2 SRAM	RoHS-compliant 165-bump BGA	200	C
4M x 8	GS8342Q07BGD-357I	SigmaQuad-II+ B2 SRAM	RoHS-compliant 165-bump BGA	357	I
4M x 8	GS8342Q07BGD-333I	SigmaQuad-II+ B2 SRAM	RoHS-compliant 165-bump BGA	333	I
4M x 8	GS8342Q07BGD-300I	SigmaQuad-II+ B2 SRAM	RoHS-compliant 165-bump BGA	300	I
4M x 8	GS8342Q07BGD-250I	SigmaQuad-II+ B2 SRAM	RoHS-compliant 165-bump BGA	250	I
4M x 8	GS8342Q07BGD-200I	SigmaQuad-II+ B2 SRAM	RoHS-compliant 165-bump BGA	200	I
4M x 9	GS8342Q10BD-357	SigmaQuad-II+ B2 SRAM	165-bump BGA	357	C
4M x 9	GS8342Q10BD-333	SigmaQuad-II+ B2 SRAM	165-bump BGA	333	C
4M x 9	GS8342Q10BD-300	SigmaQuad-II+ B2 SRAM	165-bump BGA	300	C
4M x 9	GS8342Q10BD-250	SigmaQuad-II+ B2 SRAM	165-bump BGA	250	C
4M x 9	GS8342Q10BD-200	SigmaQuad-II+ B2 SRAM	165-bump BGA	200	C
4M x 9	GS8342Q10BD-357I	SigmaQuad-II+ B2 SRAM	165-bump BGA	357	I
4M x 9	GS8342Q10BD-333I	SigmaQuad-II+ B2 SRAM	165-bump BGA	333	I
4M x 9	GS8342Q10BD-300I	SigmaQuad-II+ B2 SRAM	165-bump BGA	300	I
4M x 9	GS8342Q10BD-250I	SigmaQuad-II+ B2 SRAM	165-bump BGA	250	I
4M x 9	GS8342Q10BD-200I	SigmaQuad-II+ B2 SRAM	165-bump BGA	200	I
4M x 9	GS8342Q10BGD-357	SigmaQuad-II+ B2 SRAM	RoHS-compliant 165-bump BGA	357	C
4M x 9	GS8342Q10BGD-333	SigmaQuad-II+ B2 SRAM	RoHS-compliant 165-bump BGA	333	C

Notes:

1. For Tape and Reel add the character “T” to the end of the part number. Example: GS8342QxxBD-300T.
2. C = Commercial Temperature Range. I = Industrial Temperature Range.

 © 2011, GSI Technology

Specifications cited are subject to change without notice. For latest documentation see http://www.gsitechnology.com.

Ordering Information—GSI SigmaQuad-II+ SRAM (Continued)

Org	Part Number[1]	Type	Package	Speed (MHz)	T_A[2]
4M x 9	GS8342Q10BGD-300	SigmaQuad-II+ B2 SRAM	RoHS-compliant 165-bump BGA	300	C
4M x 9	GS8342Q10BGD-250	SigmaQuad-II+ B2 SRAM	RoHS-compliant 165-bump BGA	250	C
4M x 9	GS8342Q10BGD-200	SigmaQuad-II+ B2 SRAM	RoHS-compliant 165-bump BGA	200	C
4M x 9	GS8342Q10BGD-357I	SigmaQuad-II+ B2 SRAM	RoHS-compliant 165-bump BGA	357	I
4M x 9	GS8342Q10BGD-333I	SigmaQuad-II+ B2 SRAM	RoHS-compliant 165-bump BGA	333	I
4M x 9	GS8342Q10BGD-300I	SigmaQuad-II+ B2 SRAM	RoHS-compliant 165-bump BGA	300	I
4M x 9	GS8342Q10BGD-250I	SigmaQuad-II+ B2 SRAM	RoHS-compliant 165-bump BGA	250	I
4M x 9	GS8342Q10BGD-200I	SigmaQuad-II+ B2 SRAM	RoHS-compliant 165-bump BGA	200	I
2M x 18	GS8342Q19BD-357	SigmaQuad-II+ B2 SRAM	165-bump BGA	357	C
2M x 18	GS8342Q19BD-333	SigmaQuad-II+ B2 SRAM	165-bump BGA	333	C
2M x 18	GS8342Q19BD-300	SigmaQuad-II+ B2 SRAM	165-bump BGA	300	C
2M x 18	GS8342Q19BD-250	SigmaQuad-II+ B2 SRAM	165-bump BGA	250	C
2M x 18	GS8342Q19BD-200	SigmaQuad-II+ B2 SRAM	165-bump BGA	200	C
2M x 18	GS8342Q19BD-357I	SigmaQuad-II+ B2 SRAM	165-bump BGA	357	I
2M x 18	GS8342Q19BD-333I	SigmaQuad-II+ B2 SRAM	165-bump BGA	333	I
2M x 18	GS8342Q19BD-300I	SigmaQuad-II+ B2 SRAM	165-bump BGA	300	I
2M x 18	GS8342Q19BD-250I	SigmaQuad-II+ B2 SRAM	165-bump BGA	250	I
2M x 18	GS8342Q19BD-200I	SigmaQuad-II+ B2 SRAM	165-bump BGA	200	I
2M x 18	GS8342Q19BGD-357	SigmaQuad-II+ B2 SRAM	RoHS-compliant 165-bump BGA	357	C
2M x 18	GS8342Q19BGD-333	SigmaQuad-II+ B2 SRAM	RoHS-compliant 165-bump BGA	333	C
2M x 18	GS8342Q19BGD-300	SigmaQuad-II+ B2 SRAM	RoHS-compliant 165-bump BGA	300	C
2M x 18	GS8342Q19BGD-250	SigmaQuad-II+ B2 SRAM	RoHS-compliant 165-bump BGA	250	C
2M x 18	GS8342Q19BGD-200	SigmaQuad-II+ B2 SRAM	RoHS-compliant 165-bump BGA	200	C
2M x 18	GS8342Q19BGD-357I	SigmaQuad-II+ B2 SRAM	RoHS-compliant 165-bump BGA	357	I
2M x 18	GS8342Q19BGD-333I	SigmaQuad-II+ B2 SRAM	RoHS-compliant 165-bump BGA	333	I
2M x 18	GS8342Q19BGD-300I	SigmaQuad-II+ B2 SRAM	RoHS-compliant 165-bump BGA	300	I
2M x 18	GS8342Q19BGD-250I	SigmaQuad-II+ B2 SRAM	RoHS-compliant 165-bump BGA	250	I
2M x 18	GS8342Q19BGD-200I	SigmaQuad-II+ B2 SRAM	RoHS-compliant 165-bump BGA	200	I
1M x 36	GS8342Q37BD-357	SigmaQuad-II+ B2 SRAM	165-bump BGA	357	C
1M x 36	GS8342Q37BD-333	SigmaQuad-II+ B2 SRAM	165-bump BGA	333	C
1M x 36	GS8342Q37BD-300	SigmaQuad-II+ B2 SRAM	165-bump BGA	300	C
1M x 36	GS8342Q37BD-250	SigmaQuad-II+ B2 SRAM	165-bump BGA	250	C

Notes:

1. For Tape and Reel add the character “T” to the end of the part number. Example: GS8342QxxBD-300T.
2. C = Commercial Temperature Range. I = Industrial Temperature Range.

 © 2011, GSI Technology

Specifications cited are subject to change without notice. For latest documentation see http://www.gsitechnology.com.

Ordering Information—GSI SigmaQuad-II+ SRAM (Continued)

Org	Part Number[1]	Type	Package	Speed (MHz)	T_A[2]
1M x 36	GS8342Q37BD-200	SigmaQuad-II+ B2 SRAM	165-bump BGA	200	C
1M x 36	GS8342Q37BD-357I	SigmaQuad-II+ B2 SRAM	165-bump BGA	357	I
1M x 36	GS8342Q37BD-333I	SigmaQuad-II+ B2 SRAM	165-bump BGA	333	I
1M x 36	GS8342Q37BD-300I	SigmaQuad-II+ B2 SRAM	165-bump BGA	300	I
1M x 36	GS8342Q37BD-250I	SigmaQuad-II+ B2 SRAM	165-bump BGA	250	I
1M x 36	GS8342Q37BD-200I	SigmaQuad-II+ B2 SRAM	165-bump BGA	200	I
1M x 36	GS8342Q37BGD-357	SigmaQuad-II+ B2 SRAM	RoHS-compliant 165-bump BGA	357	C
1M x 36	GS8342Q37BGD-333	SigmaQuad-II+ B2 SRAM	RoHS-compliant 165-bump BGA	333	C
1M x 36	GS8342Q37BGD-300	SigmaQuad-II+ B2 SRAM	RoHS-compliant 165-bump BGA	300	C
1M x 36	GS8342Q37BGD-250	SigmaQuad-II+ B2 SRAM	RoHS-compliant 165-bump BGA	250	C
1M x 36	GS8342Q37BGD-200	SigmaQuad-II+ B2 SRAM	RoHS-compliant 165-bump BGA	200	C
1M x 36	GS8342Q37BGD-357I	SigmaQuad-II+ B2 SRAM	RoHS-compliant 165-bump BGA	357	I
1M x 36	GS8342Q37BGD-333I	SigmaQuad-II+ B2 SRAM	RoHS-compliant 165-bump BGA	333	I
1M x 36	GS8342Q37BGD-300I	SigmaQuad-II+ B2 SRAM	RoHS-compliant 165-bump BGA	300	I
1M x 36	GS8342Q37BGD-250I	SigmaQuad-II+ B2 SRAM	RoHS-compliant 165-bump BGA	250	I
1M x 36	GS8342Q37BGD-200I	SigmaQuad-II+ B2 SRAM	RoHS-compliant 165-bump BGA	200	I

Notes:

1. For Tape and Reel add the character “T” to the end of the part number. Example: GS8342QxxBD-300T.
2. C = Commercial Temperature Range. I = Industrial Temperature Range.

SigmaQuad-II+ SRAM Revision History

File Name	Format/Content	Description of changes
8342Q07101937B_r1		Creation of datasheet
8342Q07101937B_r1_01	Content	Updated Operating Currents table (Rev1.01a: Editorial updates)
8342Q07101937B_r1_02	Content	Updated to reflect MP status (Rev1.02a: Corrected erroneous information in Input and Output Leakage Characteristics table)

 © 2011, GSI Technology

Specifications cited are subject to change without notice. For latest documentation see http://www.gsitechnology.com.