2 "AAA" Battery Holder with Leads

12BH425-GR

Date Last Revised: 07-31-14

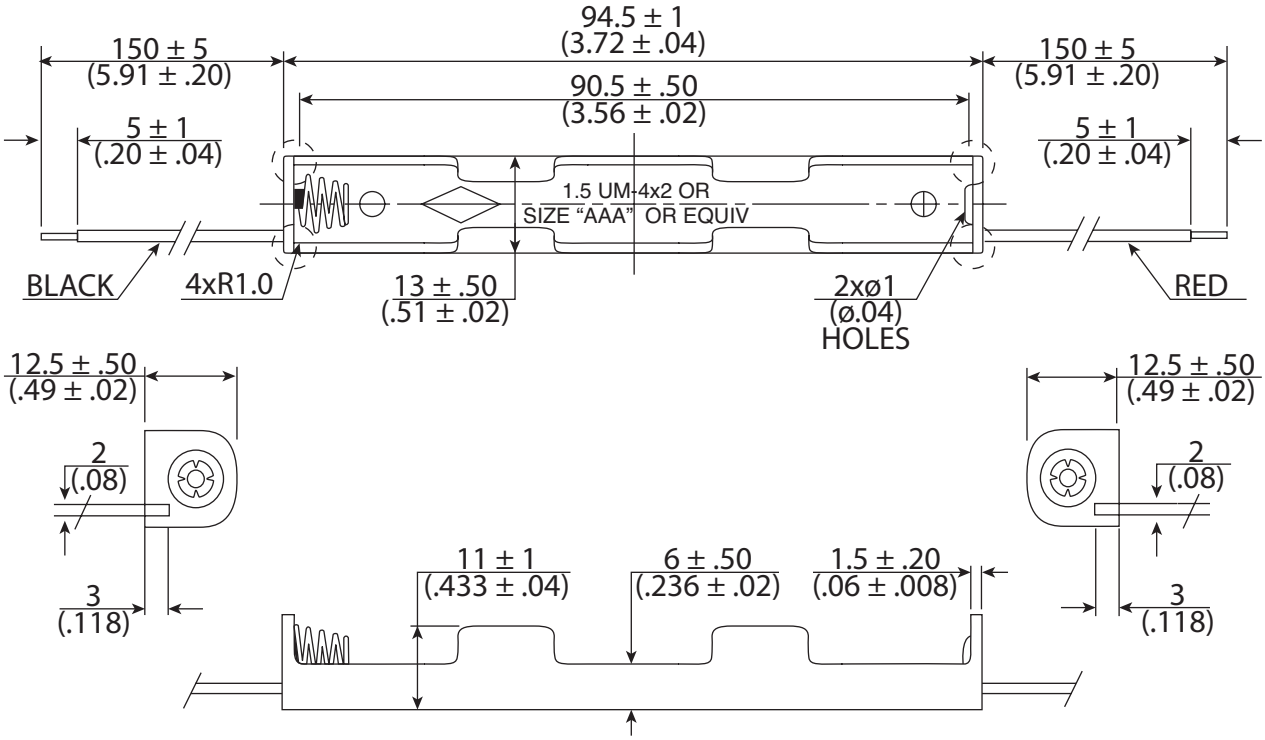

Dimensions: mm (in.)

SPECIFICATIONS	
Wire:	AWG#26, black & red 150mm±5mm, strip & tin 5mm±1mm
Material:	PP Resin, black color
Spring:	0.6mm 65C spring wire
RoHS Compliant	

Available from Mouser Electronics
1-800-346-6873 / www.mouser.com

EPD-200642

Specifications are subject to change without notice. No liability or warranty implied by this information. Environmental compliance based on producer documentation.