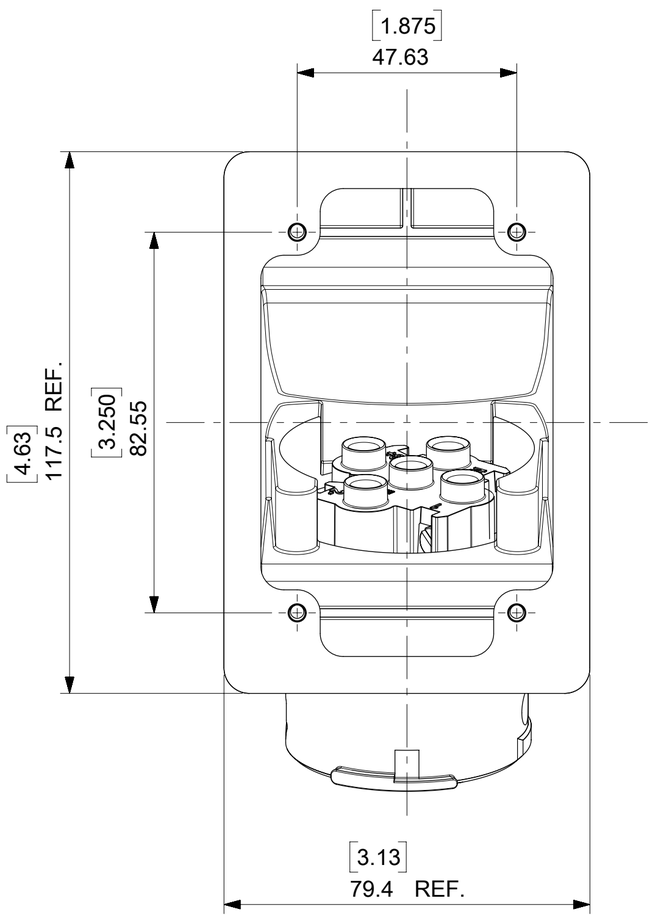

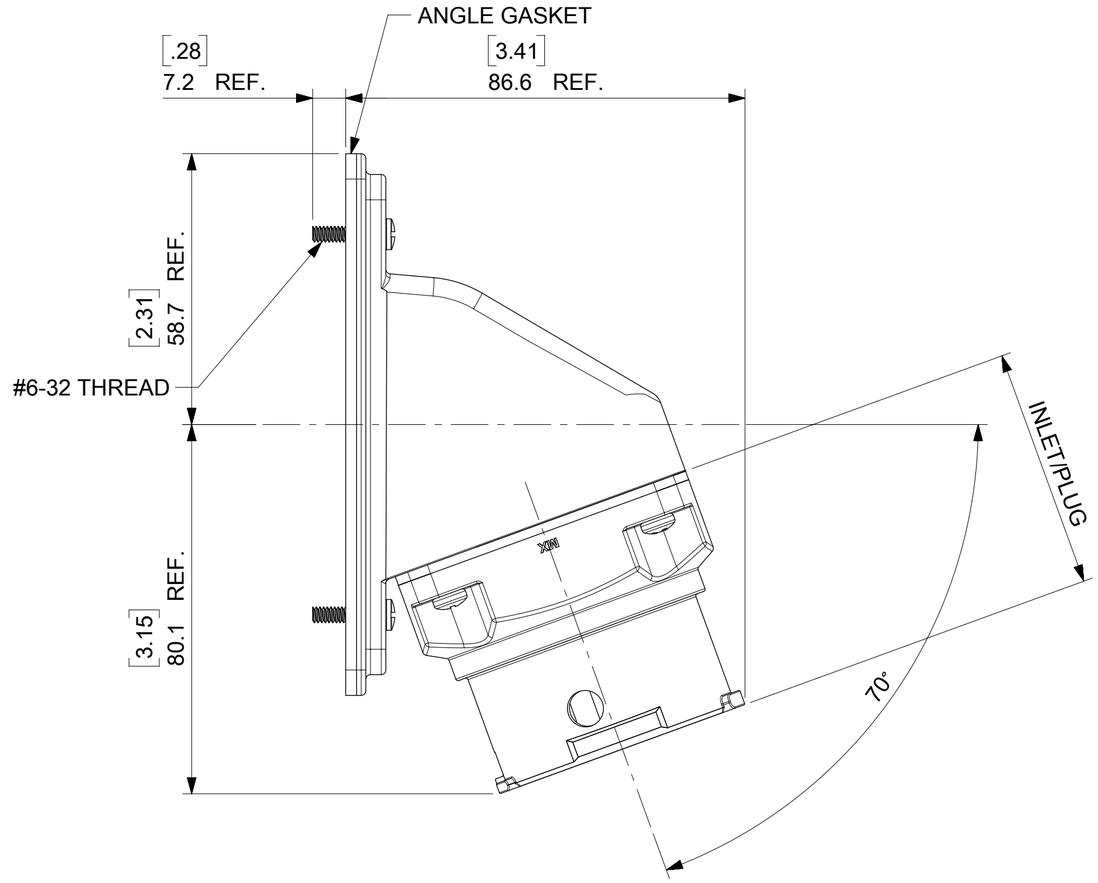

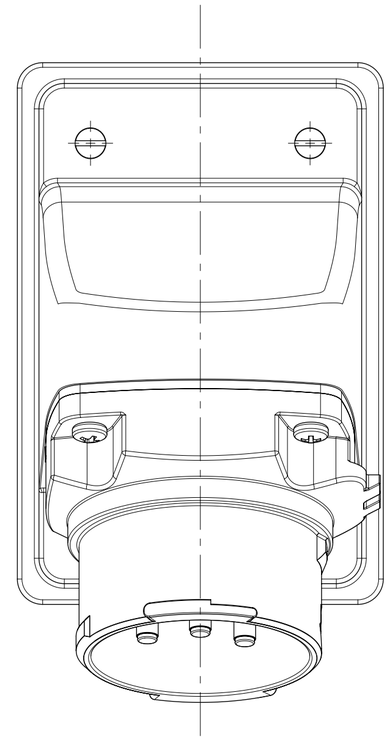

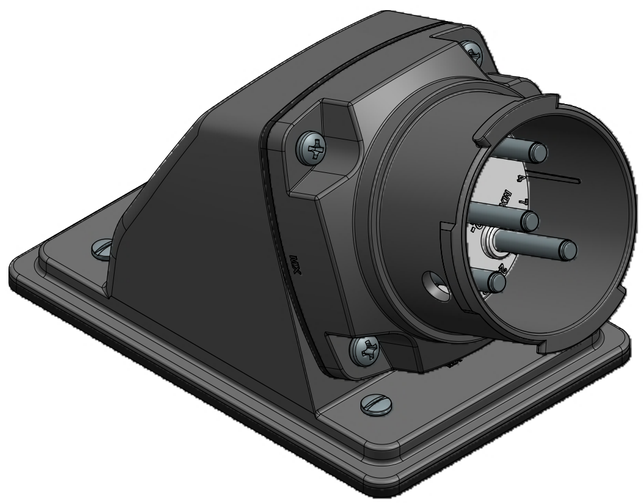

MATERIAL NUMBER	ENGINEERING NUMBER	DESCRIPTION	INSULATOR KEYING POSITION	HORSEPOWER RATING
1122191043	ARC30MAA01	ARC 30A MA 125VAC 1P+N+G	7	1 HP
1122191044	ARC30MAB02	ARC 30A MA 250VAC 2P+G		3 HP
1122191045	ARC30MAB03	ARC 30A MA 250VAC 3P+G		5 HP
1122191046	ARC30MAAB04	ARC 30A MA 125/250VAC 2P+N+G		NA
1122191047	ARC30MAC02	ARC 30A MA 208VAC 2P+G	16	NA
1122191048	ARC30MAC03	ARC 30A MA 208VAC 3P+G		5 HP
1122191049	ARC30MAAC05	ARC 30A MA 120/208VAC 3P+N+G		NA
1122191050	ARC30MAD01	ARC 30A MA 277VAC 1P+N+G	4	NA
1122191051	ARC30MAE02	ARC 30A MA 480VAC 2P+G		NA
1122191052	ARC30MAE03	ARC 30A MA 480VAC 3P+G		10 HP
1122191053	ARC30MADE05	ARC 30A MA 277/480VAC 3P+N+G		NA
1122191054	ARC30MAF02	ARC 30A MA 600VAC 2P+G	14	NA
1122191055	ARC30MAF03	ARC 30A MA 600VAC 3P+G		NA
1122191056	ARC30MAGF05	ARC 30A MA 347/600VAC 3P+N+G		NA

ARC30MAE03 SHOWN

NOTES:

MATERIALS:
- ANGLE, HOUSINGS AND INSULATORS: GLASS FILLED PBT
- CONTACTS: COPPER ALLOY WITH A SILVER NICKEL TIP, SILVER PLATED
- MOUNTING AND INTERFACE GASKETS: SILICONE
- SELF TAPPING SCREWS (PHILLIPS) - STAINLESS STEEL
- ANGLE MOUNTING SCREWS (SLOTTED) - STAINLESS STEEL
- ANGLE GASKET - EPDM

RATINGS:
- CURRENT: 30 AMPS
- VOLTAGE AND HORSEPOWER: SEE TABLE
- OPERATING TEMPERATURE: -25°C (-13°F) TO 60°C (140°F)
- ENVIRONMENTAL: TYPE 4X, IP69K
- WIRING CAPACITY: 12 AWG MIN. TO 8 AWG MAX.
- TORQUE TERMINAL SCREWS TO 1.7 N-M (15 in/lbs)
- AGENCY: UL LISTING PENDING
  - SWITCH RATED RECEPTACLE/CONNECTOR
  - BRANCH CIRCUIT DISCONNECT SWITCH
  - MOTOR CIRCUIT DISCONNECT SWITCH IF HP RATED

INLET/PLUG AND HANDLE ARE PACKAGED AS SUB-ASSEMBLIES AND WILL REQUIRE END USER ASSEMBLY.

THIS DRAWING CONTAINS INFORMATION THAT IS PROPRIETARY TO MOLEX ELECTRONIC TECHNOLOGIES, LLC AND SHOULD NOT BE USED WITHOUT WRITTEN PERMISSION

SYMBOLS: = 0

DIMENSION UNITS: INCH | SCALE: 1:1

GENERAL TOLERANCES (UNLESS SPECIFIED)

	MM	INCH
4 PLACES	±	±
3 PLACES	±	±
2 PLACES	±	±
1 PLACE	±	±
0 PLACES	±	±
ANGULAR TOL	± °	

DRAFT WHERE APPLICABLE MUST REMAIN WITHIN DIMENSIONS

CURRENT REV DESC: ADDED 10HP,NEW NOTES

EC NO: 604773
DRWN: MJANTELEZIO 2018/09/20
CHK'D: JFMURPHY 2018/11/05
APPR: JFMURPHY 2018/11/05

INITIAL REVISION:
DRWN: DRWN BY XXXX/XX/XX
APPR: APPR BY XXXX/XX/XX

THIRD ANGLE PROJECTION | DRAWING: C-SIZE | SERIES: 112219

molex

ARC 30A MA 480VAC 3P+G

PRODUCT CUSTOMER DRAWING

DOCUMENT NUMBER	DOC TYPE	DOC PART	REVISION
1122191052	PSD	000	A2

MATERIAL NUMBER | CUSTOMER: GENERAL MARKET | SHEET NUMBER: 1 OF 1

DOCUMENT STATUS	P1	RELEASE DATE	2018/11/05 17:31:37