MATING FACE

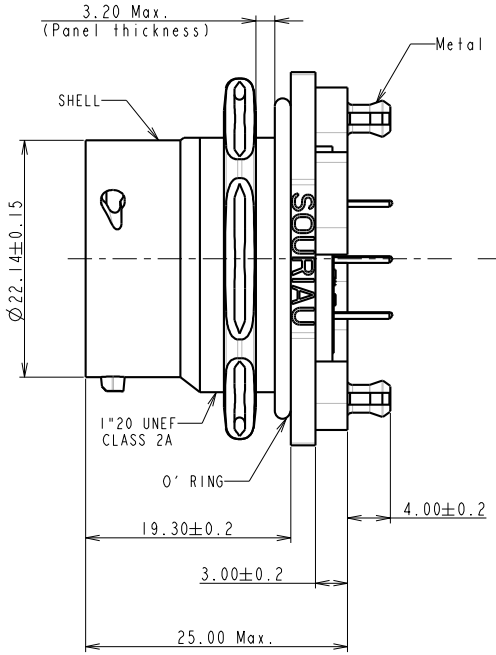

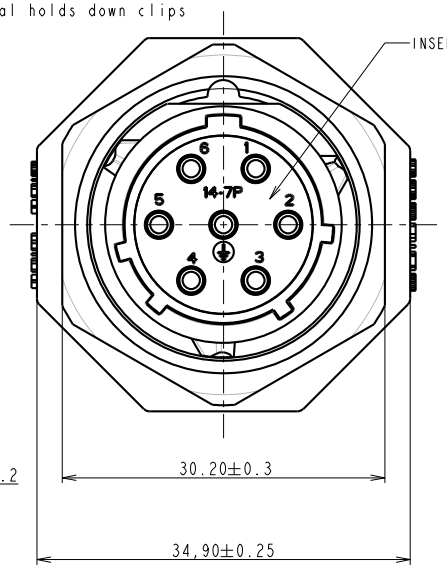

PANEL CUT OUT

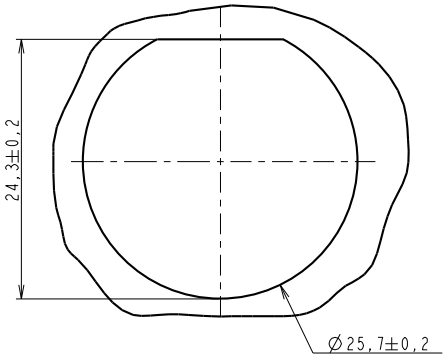

MATERIAL :

Shell:Polyamid UL94 V-0
Insert:Polyalid UL94 V-0
Seal gasket : Sealing IP68/69K : Silicone
O'ring:nitril
Nut:Aluminium alloy black anodized

PERFORMANCE CHARACTERISTICS :

Operating temperature:-40°C up to 105°C
Insulation resistance:5000 MΩmin
Test potential:2000 Vrms for #16 layout
Corrosion salt spray:500 hours
Durability:250 matings and unmatings
Sealing in mated conditions:
- IP68 1 bar during 1 week : immersion under 10 m of water. (IEC 60529)
- IP69K : exposure to high pressure water of cleaning equipement(DIN 40050)

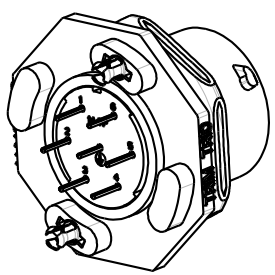

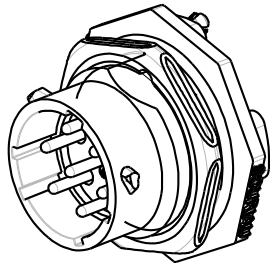

MALE CONNECTOR

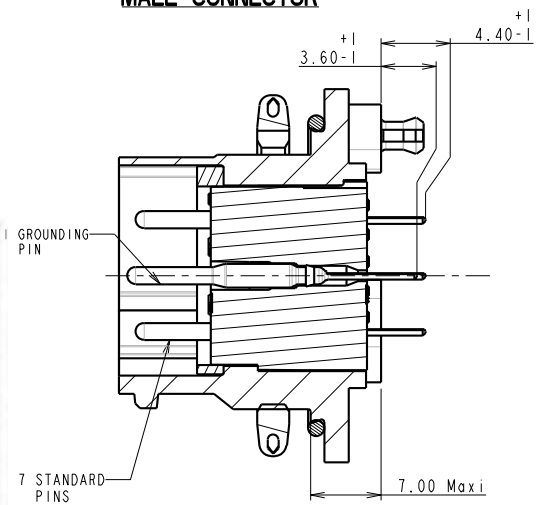

DRILLING PATTERN

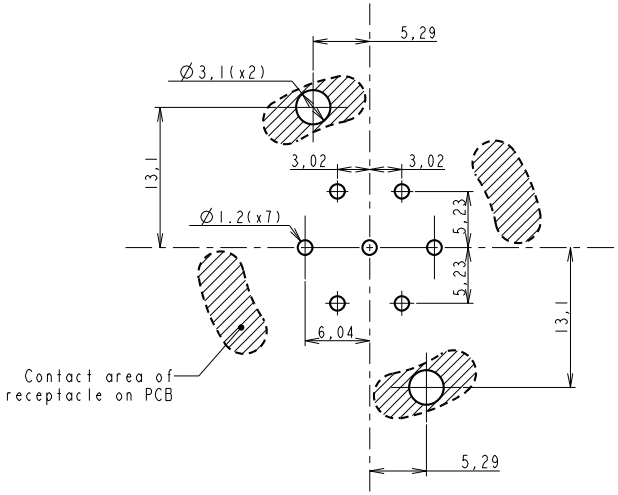

P/N : UTS7147PSEK9

CUSTOMER DRAWING

ISS	DATE	Latest modification - by:	MOD N°
B	27/03/07	Change position of one harpoon : Put a symetric positon for the 2 harpoons - Add dimension of contact termination	--

Designed by: SORIN V. Date: 17/05/06 Type of drawing: Customer

Checked by: SEE DISTRIBUTION LIST Date: SEE DISTRIBUTION LIST

TITLE: JAM NUT RECEPTACLE UTS CONNECTOR

Scale: 3/1

General angular Tolerances: ± --

MATERIAL --

General linear Tolerances ±0.1

General machining surface texture Ra 3.2

Geometrical Tolerances See NF E 04-552

PROJECT: UTS

SOURIAU
Connection Technology

SOURIAU
Route Nationale 23
72470 CHAMPAGNE
Tel. (33)02.43.54.35.00

This document is the property of SOURIAU
It must not be reproduced or communicated without permission

FORMAT: A2

SOURIAU DRG N°: C009-UTS1-A

SHEET: 1/1

NOT EXPORT CONTROLLED