REV.	ECN NO.	DATE	SIGN	DESCRIPTION
B	LEN1480608	2014/08/12	Rita	Update Logo

ALTW
CONFIDENTIAL
2014-08-12
R&D DEPT.

ALTW
DCC. DEPT.
CONFIDENTIAL
2014.09.01
ISSUED

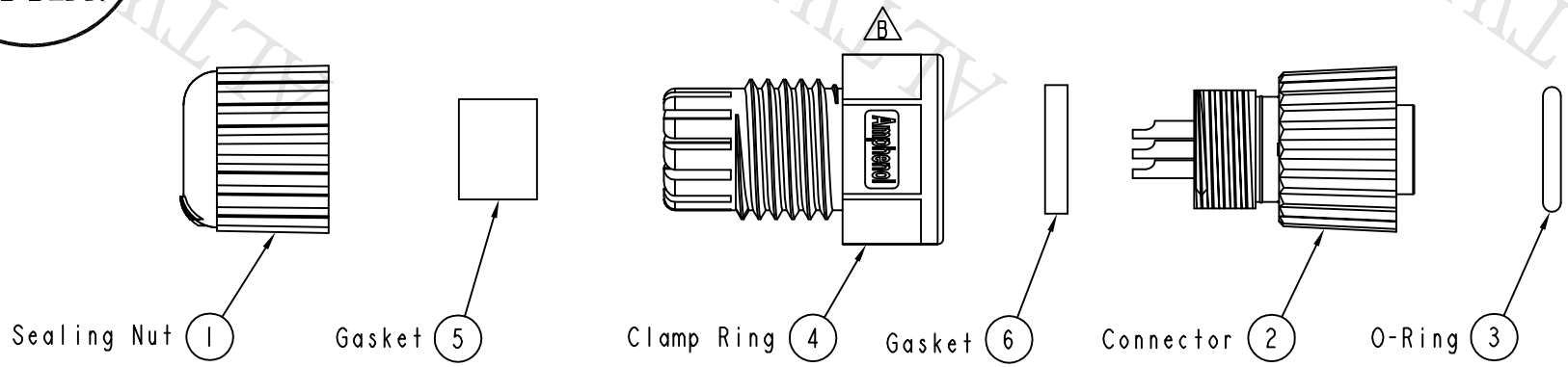

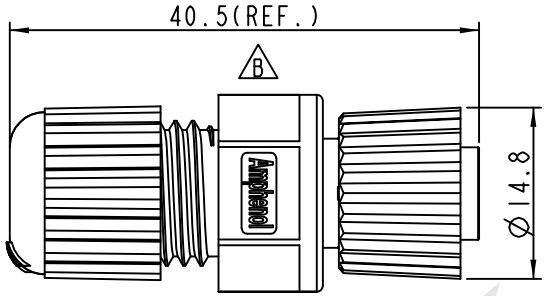

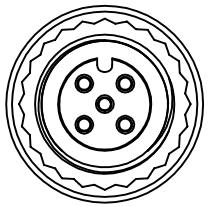

Conn.

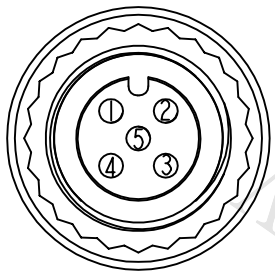

Pin Assignments
Front View

Note:
* QC Important Dimension To Check.
* Waterproof Rate: IP68
* Housing: Black, Nylon+GF
* Pin: Copper Alloy, Gold Plated
* Nut: Black, Nylon+GF
* Ring: Green, Viton
* Gasket: Black, EPDM
* Clamp Ring: Black, Nylon
* Sealing Nut: Black, Nylon
* Seal: Black, EPDM
* Seal For Cable OD:Ø4.5mm~Ø6.5mm

UNIT:mm

TOLERANCE
.X ±0.25
.XX ±0.1
.XXX ±0.05
ANGLES ±1°

TITLE	M12 Conn, Assy Screw 5Pin F Conn. F Pin		
SCALE 3:2	SIZE A4	SHEET 1 OF 1	
REV. B	WC-REV. A.3	QC:Inspection item	

Amphenol LTW
安費諾亮泰企業股份有限公司

ITEM NO 12P-05BFFA-SL8001	DRAWN BY Rita	DATE 2014-08-12
DWG NO 12P-05BFFA-SL8001	CHECKED BY Kris	DATE 2014-08-12
CUSTOMER ALTW	APPROVED BY Wenmao	DATE 2014-08-12

FMW10702-01-02A1

THIS DOCUMENT IS SUBJECT TO CHANGE WITHOUT NOTICE. IT IS CONFIDENTIAL AND A PROPERTY OF Amphenol LTW. DISCLOSURE TO THIRD PARTY HAS TO BE AUTHORIZED BY Amphenol LTW.