Alle Rechte vorbehalten/ *All rights reserved*

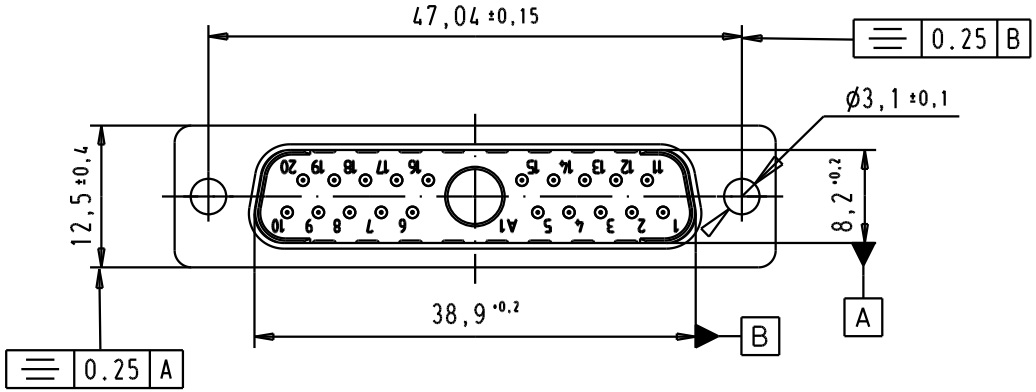

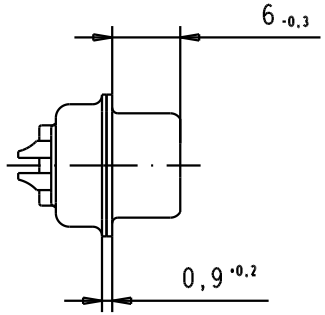

Solder buckel termination for AWG 20

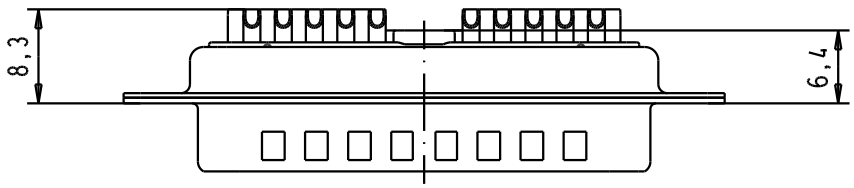

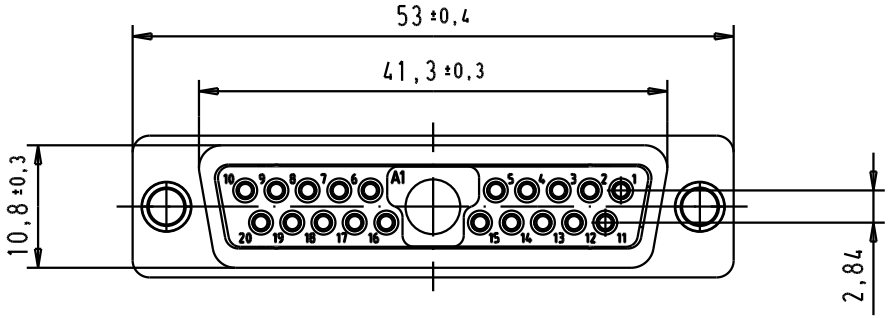

Part number	Performance level	index designation	Mod.	Dat.	Name
0969 311 7211	0.1 µm Au				
0969 311 5211.500	0.76 µm Au min.	Non magnetic	33465	24/04/06	JMDR
0969 311 5211	0.76 µm Au		32987	09/08/05	JMDR

	Dat.	Name
Detail.	09/08/05	JMDR
Insp.		
Stand.		

All Dim. in mm
Orig. Size DIN A 4

D-sub, male, straight, 21W1, solder buckets, tin plated shell with dimples and holes

Maßstab/ *Scale* 1,5:1

HARTING EURL
F-95972 Paris

TB 0969 311 X211

Sub.

Blatt/ *Page* 1/1