MATERIAL NUMBER	ENGINEERING NUMBER	DESCRIPTION	INSULATOR KEYING POSITION	HORSEPOWER RATING
1122190001	ARC30FA01	ARC 30A F 125VAC 1P+N+G	7	1 HP
1122190002	ARC30FB02	ARC 30A F 250VAC 2P+G		3 HP
1122190003	ARC30FB03	ARC 30A F 250VAC 3P+G		5 HP
1122190004	ARC30FAB04	ARC 30A F 125/250VAC 2P+N+G		NA
1122190005	ARC30FC02	ARC 30A F 208VAC 2P+G	16	NA
1122190006	ARC30FC03	ARC 30A F 208VAC 3P+G		5 HP
1122190007	ARC30FAC05	ARC 30A F 120/208VAC 3P+N+G		NA
1122190008	ARC30FD01	ARC 30A F 277VAC 1P+N+G	4	NA
1122190009	ARC30FE02	ARC 30A F 480VAC 2P+G		NA
1122190010	ARC30FE03	ARC 30A F 480VAC 3P+G		10 HP
1122190011	ARC30FDE05	ARC 30A F 277/480VAC 3P+N+G		NA
1122190012	ARC30FF02	ARC 30A F 600VAC 2P+G	14	NA
1122190013	ARC30FF03	ARC 30A F 600VAC 3P+G		NA
1122190014	ARC30FGF05	ARC 30A F 347/600VAC 3P+N+G		NA

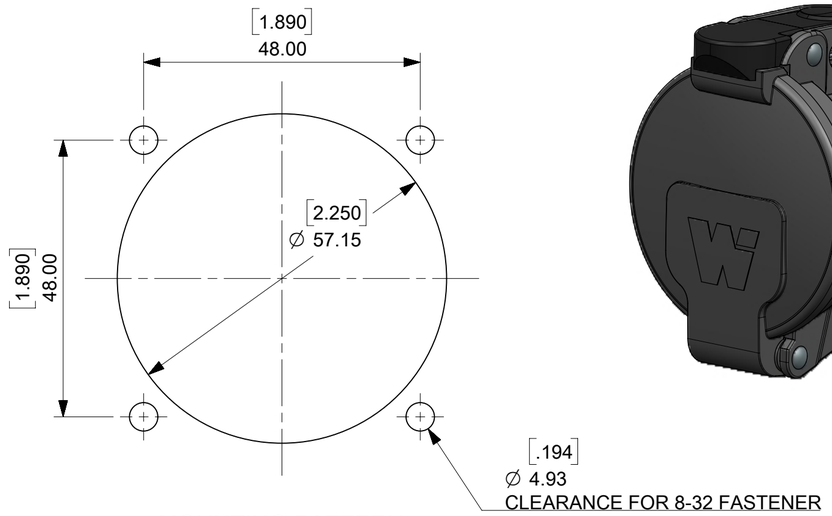

MOUNTING PATTERN

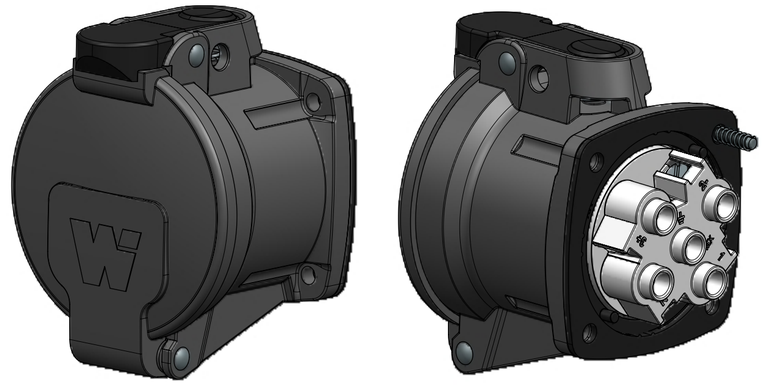

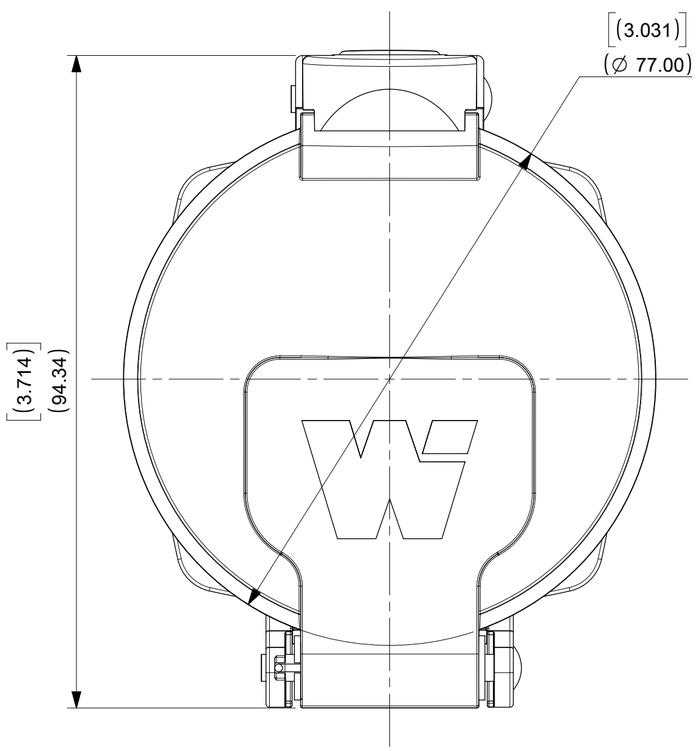

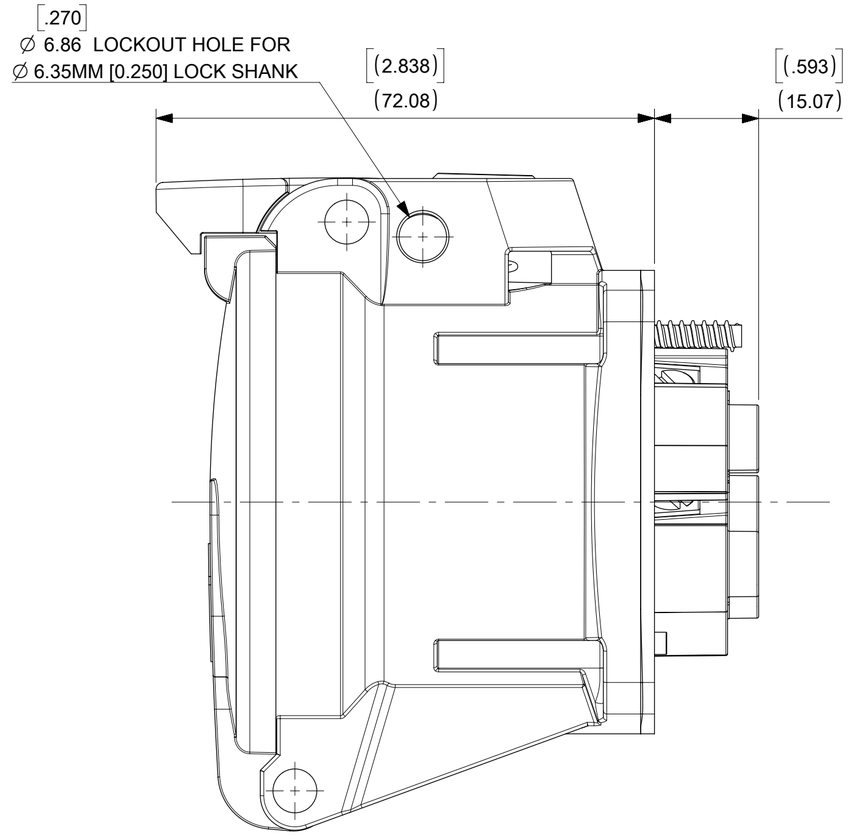

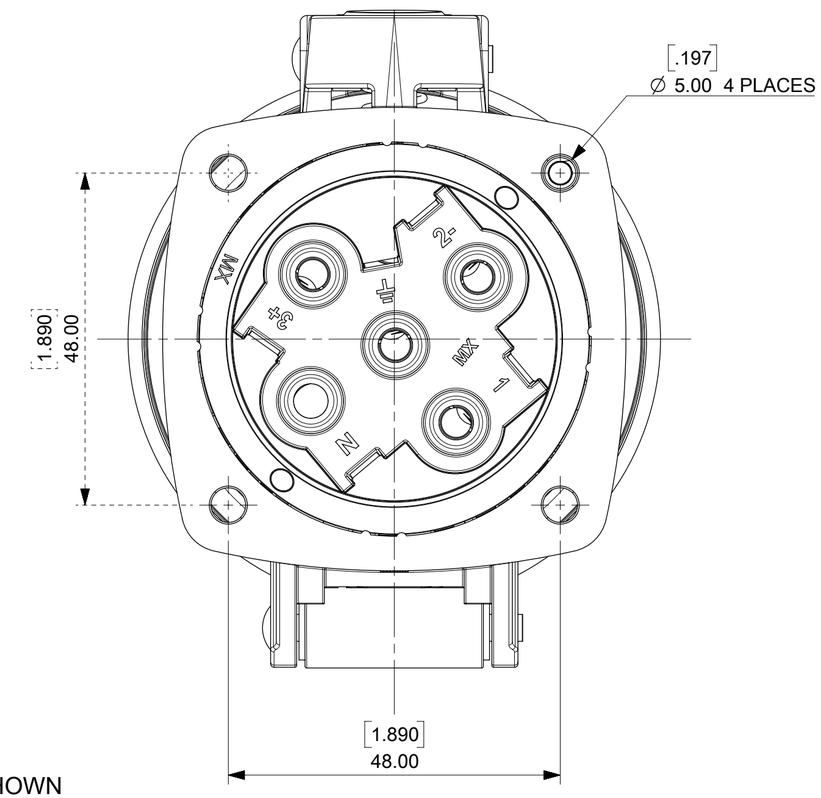

ARC30FE03 SHOWN

NOTES:

MATERIALS:
- HOUSINGS AND INSULATORS: GLASS FILLED PBT
- CONTACTS: COPPER ALLOY WITH A SILVER NICKEL TIP, SILVER PLATED
- MOUNTING AND INTERFACE GASKETS: SILICONE

RATINGS:
- CURRENT: 30 AMPS
- VOLTAGE AND HORSEPOWER: SEE TABLE
- OPERATING TEMPERATURE: -40°C (-40°F) TO 60°C (140°F)
- ENVIRONMENTAL: TYPE 4X, IP69K
- WIRING CAPACITY: 12 AWG MIN. TO 8 AWG MAX.
- TORQUE TERMINAL SCREWS TO 1.7 N-M (15 in/lbs)
- AGENCY: UL LISTING PENDING
  - SWITCH RATED RECEPTACLE/CONNECTOR
  - BRANCH CIRCUIT DISCONNECT SWITCH
  - MOTOR CIRCUIT DISCONNECT SWITCH IF HP RATED

THIS DRAWING REPLACES SD-112219-001.

DOCUMENT STATUS	P1	RELEASE DATE	2018/11/05 17:31:23

THIS DRAWING CONTAINS INFORMATION THAT IS PROPRIETARY TO MOLEX ELECTRONIC TECHNOLOGIES, LLC AND SHOULD NOT BE USED WITHOUT WRITTEN PERMISSION

SYMBOLS: EA = 0; EC = 0; EF = 0; S = 0; ▼ = 0; C = 0; ☒ = 0; ■ = 0; G = 0

DIMENSION UNITS: INCH
SCALE: 1.5:1
GENERAL TOLERANCES (UNLESS SPECIFIED)

	MM	INCH
4 PLACES	±	±
3 PLACES	±	±
2 PLACES	±	±
1 PLACE	±	±
0 PLACES	±	±
ANGULAR TOL	± °	

DRAFT WHERE APPLICABLE MUST REMAIN WITHIN DIMENSIONS

CURRENT REV DESC: ADDED 10HP,NEW NOTES

EC NO: 604773
DRWN: MJANTELEZIO 2018/09/20
CHK'D: JFMURPHY 2018/11/05
APPR: JFMURPHY 2018/11/05

INITIAL REVISION:
DRWN: DRWN BY XXXX/XX/XX
APPR: APPR BY XXXX/XX/XX

THIRD ANGLE PROJECTION
DRAWING: C-SIZE
SERIES: 112219

molex

ARC 30A F 480VAC 3P+G

PRODUCT CUSTOMER DRAWING

DOCUMENT NUMBER	DOC TYPE	DOC PART	REVISION
1122190010	PSD	000	B3

MATERIAL NUMBER	CUSTOMER	SHEET NUMBER
	GENERAL MARKET	1 OF 2

FORMAT: Eng-tega-master-tb-prod-C
REVISION: D
DATE: 2018/01/18

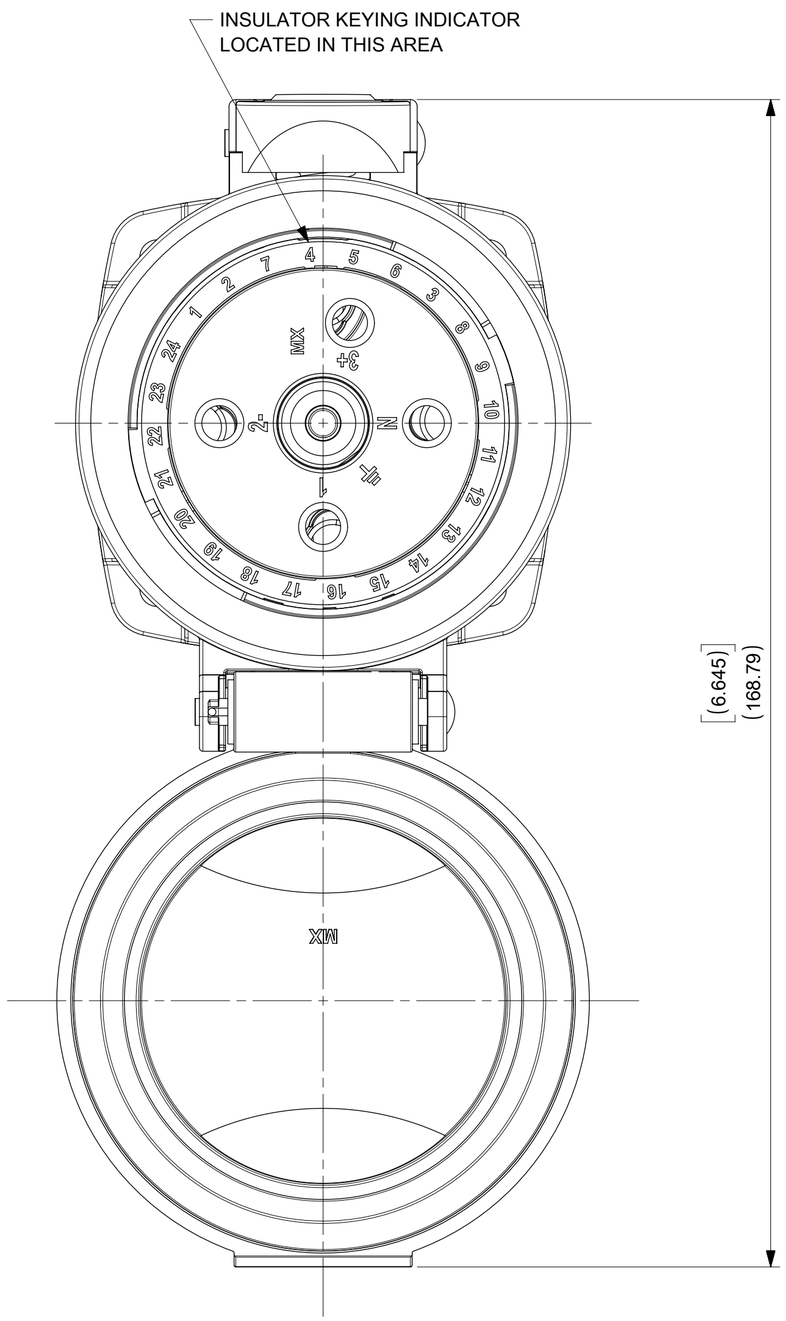

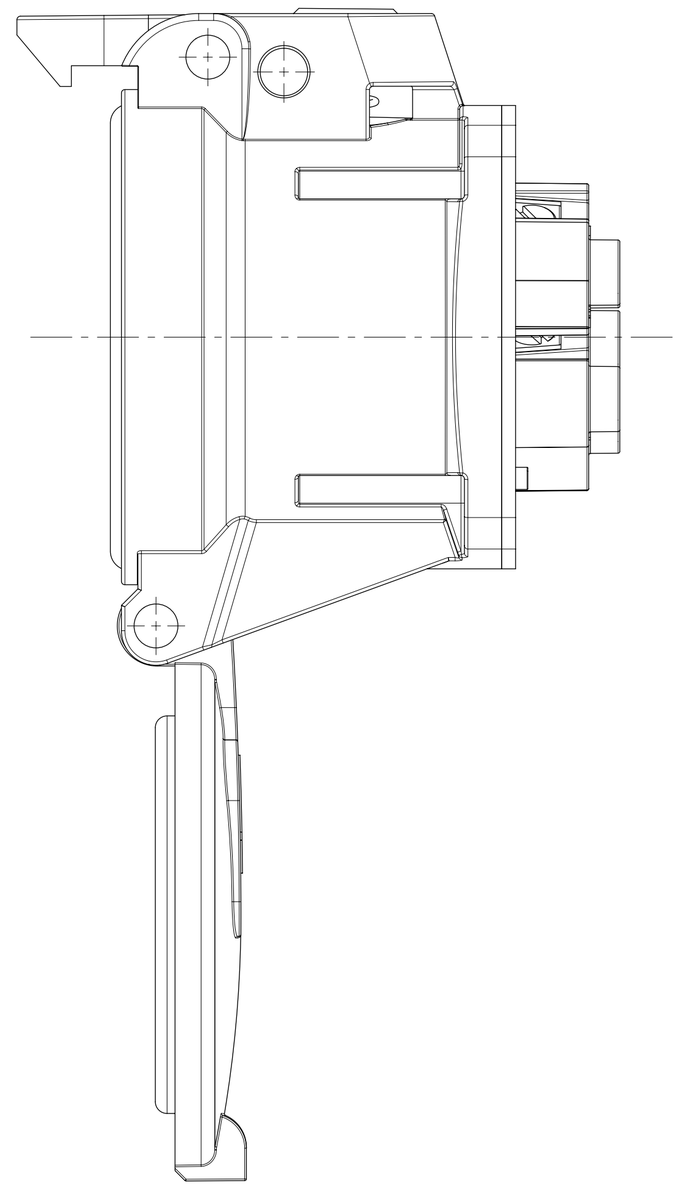

ARC30FE03 SHOWN

SYMBOLS	THIS DRAWING CONTAINS INFORMATION THAT IS PROPRIETARY TO MOLEX ELECTRONIC TECHNOLOGIES, LLC AND SHOULD NOT BE USED WITHOUT WRITTEN PERMISSION				
= 0	DIMENSION UNITS: INCH	SCALE: 1.5:1	CURRENT REV DESC: ADDED 10HP,NEW NOTES		molex
= 0	GENERAL TOLERANCES (UNLESS SPECIFIED)				
= 0	MM / INCH		EC NO: 604773		ARC 30A F 480VAC 3P+G
= 0	4 PLACES ± / ±		DRWN: MJANTELEZIO	2018/09/20	
= 0	3 PLACES ± / ±		CHK'D: JFMURPHY	2018/11/05	
= 0	2 PLACES ± / ±		APPR: JFMURPHY	2018/11/05	PRODUCT CUSTOMER DRAWING
= 0	1 PLACE ± / ±		INITIAL REVISION:		DOCUMENT NUMBER: 1122190010 / DOC TYPE: PSD / DOC PART: 000 / REVISION: B3
= 0	0 PLACES ± / ±		DRWN: DRWN BY	XXXX/XX/XX	
= 0	ANGULAR TOL ± °		APPR: APPR BY	XXXX/XX/XX	
= 0	DRAFT WHERE APPLICABLE MUST REMAIN WITHIN DIMENSIONS	THIRD ANGLE PROJECTION	DRAWING: C-SIZE	SERIES: 112219	MATERIAL NUMBER / CUSTOMER: GENERAL MARKET / SHEET NUMBER: 2 OF 2

DOCUMENT STATUS	P1	RELEASE DATE	2018/11/05 17:31:23

FORMAT: Eng-lega-master-tb-prod-C
REVISION: D
DATE: 2018/01/18