KOA SPEER ELECTRONICS, INC.

# CF

## carbon film leaded resistors

EU RoHS COMPLIANT

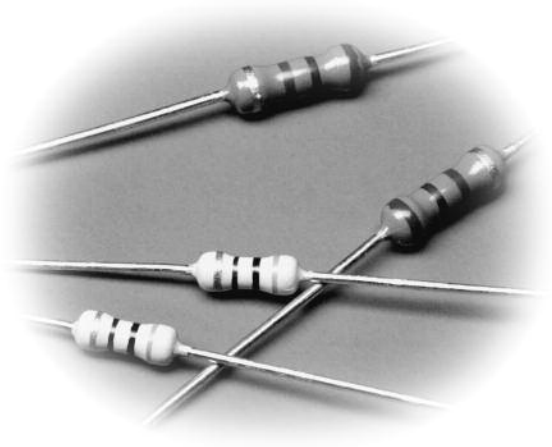

## features

- Flameproof coating is available (specify “CFP”)
- Reduced body size (specify “CFS/CFPS”)
- Suitable for automatic machine insertion
- Marking: Venetian red with color-coded bands on CF
  Green body color with color-coded bands on CFP
  Ivory body color with color-coded bands on CFS1/4
- Products with lead-free terminations meet EU RoHS and China RoHS requirements

## dimensions and construction

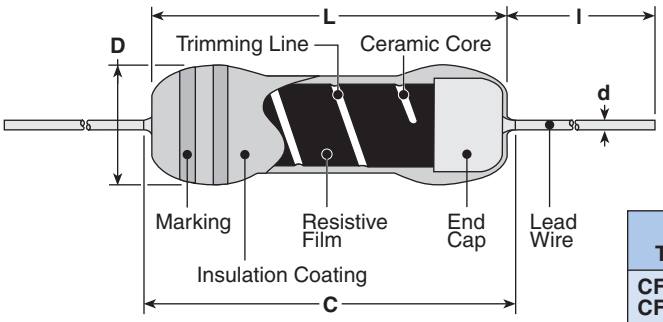


| Type | Dimensions inches (mm) L | C (max.) | D | d (nom.) | l** Standard | l** Long |
|---|---|---|---|---|---|---|
| CFS1/4 CFPS1/4 | .126±.008 (3.2±0.2) | .134 (3.4) | .067±.008 (1.7±0.2) | .018 (0.45) | .551 Min.* (14.0 Min.) | .787 Min.*** (20.0 Min.) |
| CF1/4 CFP1/4 | .240±0.2 (6.1±0.5) | .280 (7.1) | .092±.012 (2.3±0.3) | .024 (0.6) | | |
| CFS1/2 CFPS1/2 | .248±.02 (6.3±0.5) | .280 (7.1) | .112±.012 (2.85±0.3) | .024 (0.6) | .787 Min. (20.0 Min.) | — |
| CFB1/2 CFPB1/2 | .354±.039 (9.0±1.0) | .433 (11.0) | .138±.02 (3.5±0.5) | .028 (0.7) | | |

* Forming code S is applied for bulk type.
** Lead length changes depending on taping and forming type.
*** Long type is custom-made

## ordering information

New Part #

| CF | 1/4 | C | T52 | R | 103 | J |
|---|---|---|---|---|---|---|
| **Type** | **Power Rating** | **Termination Material** | **Taping and Forming** | **Packaging** | **Nominal Resistance** | **Tolerance** |
| CF<br>CFP | S1/4: 0.25W<br>1/4: 0.25W<br>S1/2: 0.5W<br>B1/2: 0.5W | C: SnCu | Axial: T26, T52, L52<br>Radial: VT, MT, MHT, VTP, VTE<br>U Forming: U, UCL<br>M Forming: M5, M10, M12.5<br>L Forming: L10, L12.5<br>S Forming: S | A: Ammo<br>R: Reel | 2 significant figures + 1 multiplier<br>“R” indicates decimal on value <10Ω | G: ±2%<br>J: ±5% |

For further information on packaging, please refer to Appendix C.

Specifications given herein may be changed at any time without prior notice. Please confirm technical specifications before you order and/or use. 12/23/13

## applications and ratings

| Part Designation | Power Rating @ 70°C | Minimum Dielectric Withstanding Voltage | T.C.R. (ppm/°C) +350 to -450 | 0 to -700 | 0 to -1000 | 0 to -1300 | Resistance Range E-24 (G±2%) | Resistance Range E-24 (J±5%) | Absolute Maximum Working Voltage | Absolute Maximum Overload Voltage |
|---|---|---|---|---|---|---|---|---|---|---|
| CFS1/4 | 0.25W | 300V | 2.2Ω - 47kΩ | 51kΩ - 100kΩ | 110kΩ - 330kΩ | 360kΩ - 1MΩ | 10Ω - 330kΩ | 2.2Ω - 1MΩ | 250V | 500V |
| CFPS1/4 | | | | | | | 10Ω - 100kΩ | 2.2Ω - 1MΩ | | |
| CF1/4 | | 500V | 2.2Ω - 100kΩ | 110kΩ - 330kΩ | 360kΩ - 1MΩ | 1.1MΩ - 5.1MΩ | 10Ω - 1MΩ | 2.2Ω - 5.1MΩ | 300V | 600V |
| CFP1/4 | | | | | | — | | 2.2Ω - 1MΩ | | |
| CFS1/2 | 0.50W | 700V | 1.0Ω - 91kΩ | 100kΩ - 1MΩ | 1.1MΩ - 2.2MΩ | 2.4MΩ - 5.1MΩ | | 1.0Ω - 5.1MΩ | 350V | 700V |
| CFPS1/2 | | | 2.2Ω - 91kΩ | | — | — | | 2.2Ω - 1MΩ | | |
| CFB1/2 | 0.50W | 700V | 2.2Ω - 100kΩ | 110kΩ - 1MΩ | 1.1MΩ - 2.2MΩ | 2.4MΩ - 5.1MΩ | | 2.2Ω - 5.1MΩ | 400V | 800V |

Operating temperature: -55°C ~ +155°C

## environmental applications

### Derating Curve

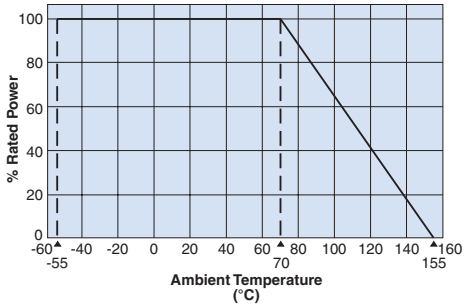


For resistors operated at an ambient temperature of 70°C or above, a power rating shall be derated in accordance with the above derating curve.

### Surface Temperature Rise

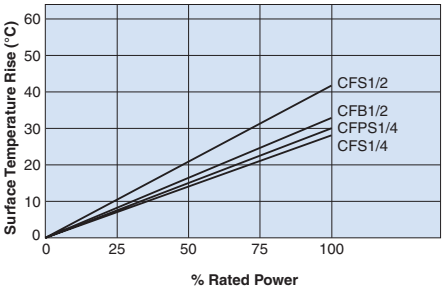


### Load Life @ 70°C, 1000 Hr

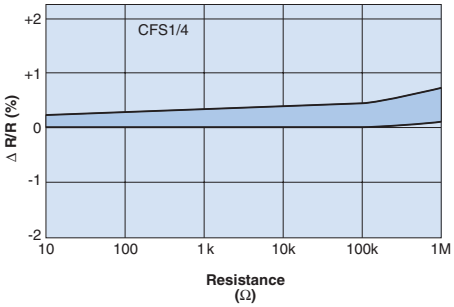


### Performance Characteristics

| Parameter | Requirement Δ R ±(% + 0.05Ω) Limit | Typical | Test Method |
|---|---|---|---|
| Resistance | Within specified tolerance | — | Measuring points are at 10mm ±1mm from the end cap. |
| T.C.R. | Within specified T.C.R. | — | Room temperature +100°C |
| Overload (Short time) | ±1% | ±0.5% | Rated voltage x 2.5 or max. overload voltage for 5 seconds, whichever is lower |
| Resistance to Solder Heat | ±1% | ±0.5% | 260°C ±5°C, 10 seconds ± 1 second |
| Terminal Strength | No lead-coming off and loose terminals | — | Twist 360°C, 5 times |
| Rapid Change of Temperature | ±1% | ±0.5% | -55°C (30 minutes), +125°C (30 minutes), 5 cycles |
| Moisture Resistance | ±5% | ±2.5% | 40°C ± 2°C, 90 - 95% RH, 1000 hours, 1.5 hr ON, 0.5 hr OFF cycle |
| Endurance at 70°C | ±3% | ±1.5% | 70°C ± 2°C, 1000 hours, 1.5 hr ON, 0.5 hr OFF cycle |
| Resistance to Solvent (CFS & CFPS only) | No abnormality in appearance. Marking shall be easily legible. | — | Ultrasonic washing with Isopropyl alcohol for 2 minutes. Power: 0.3W/cm², f: 28kHz, temp: 35°C±5°C |
| Flame Retardant (CFS & CFPS only) | No evidence of flaming or self-flaming | — | Flame test: The test flame shall be applied and removed for each 15 seconds respectively to repeat the cycle 5 times. Overload flame retardant: Power (AC) corresponding to 2, 4, 8, 16 and 32 times the power rating shall be applied for each 1 minute until disconnection occurs. However the applied voltage shall not exceed 4 times the maximum operating voltage. |

**Specifications given herein may be changed at any time without prior notice. Please confirm technical specifications before you order and/or use.** 12/24/13