KOA SPEER ELECTRONICS, INC.

CF

carbon film leaded resistors

EU RoHS COMPLIANT

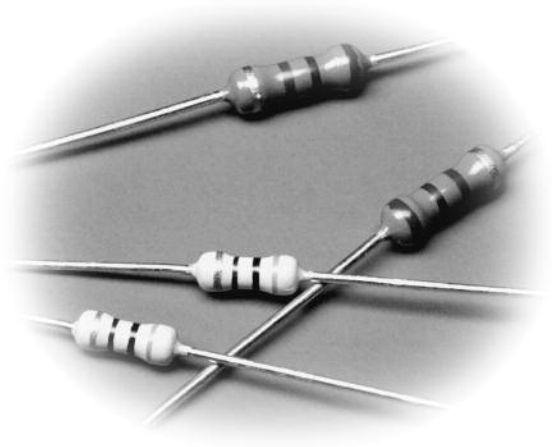

features

- Flameproof coating is available (specify “CFP”)
- Reduced body size (specify “CFS/CFPS”)
- Suitable for automatic machine insertion
- Marking: Venetian red with color-coded bands on CF
  Green body color with color-coded bands on CFP
  Ivory body color with color-coded bands on CFS1/4
- Products with lead-free terminations meet EU RoHS and China RoHS requirements

dimensions and construction

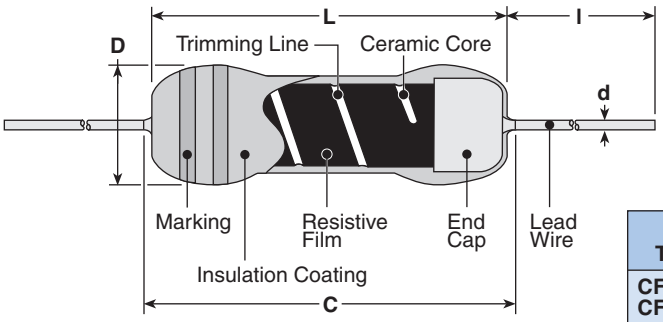

Type	Dimensions inches (mm) L	C (max.)	D	d (nom.)	l** Standard	l** Long
CFS1/4 CFPS1/4	.126±.008 (3.2±0.2)	.134 (3.4)	.067±.008 (1.7±0.2)	.018 (0.45)	.551 Min.* (14.0 Min.)	.787 Min.*** (20.0 Min.)
CF1/4 CFP1/4	.240±0.2 (6.1±0.5)	.280 (7.1)	.092±.012 (2.3±0.3)	.024 (0.6)		
CFS1/2 CFPS1/2	.248±.02 (6.3±0.5)	.280 (7.1)	.112±.012 (2.85±0.3)	.024 (0.6)	.787 Min. (20.0 Min.)	—
CFB1/2 CFPB1/2	.354±.039 (9.0±1.0)	.433 (11.0)	.138±.02 (3.5±0.5)	.028 (0.7)		

* Forming code S is applied for bulk type.
** Lead length changes depending on taping and forming type.
*** Long type is custom-made

ordering information

New Part #

CF	1/4	C	T52	R	103	J
Type	**Power Rating**	**Termination Material**	**Taping and Forming**	**Packaging**	**Nominal Resistance**	**Tolerance**
CF CFP	S1/4: 0.25W 1/4: 0.25W S1/2: 0.5W B1/2: 0.5W	C: SnCu	Axial: T26, T52, L52 Radial: VT, MT, MHT, VTP, VTE U Forming: U, UCL M Forming: M5, M10, M12.5 L Forming: L10, L12.5 S Forming: S	A: Ammo R: Reel	2 significant figures + 1 multiplier “R” indicates decimal on value <10Ω	G: ±2% J: ±5%

For further information on packaging, please refer to Appendix C.

Specifications given herein may be changed at any time without prior notice. Please confirm technical specifications before you order and/or use. 12/23/13

applications and ratings

Part Designation	Power Rating @ 70°C	Minimum Dielectric Withstanding Voltage	T.C.R. (ppm/°C) +350 to -450	0 to -700	0 to -1000	0 to -1300	Resistance Range E-24 (G±2%)	Resistance Range E-24 (J±5%)	Absolute Maximum Working Voltage	Absolute Maximum Overload Voltage
CFS1/4	0.25W	300V	2.2Ω - 47kΩ	51kΩ - 100kΩ	110kΩ - 330kΩ	360kΩ - 1MΩ	10Ω - 330kΩ	2.2Ω - 1MΩ	250V	500V
CFPS1/4							10Ω - 100kΩ	2.2Ω - 1MΩ		
CF1/4		500V	2.2Ω - 100kΩ	110kΩ - 330kΩ	360kΩ - 1MΩ	1.1MΩ - 5.1MΩ	10Ω - 1MΩ	2.2Ω - 5.1MΩ	300V	600V
CFP1/4						—		2.2Ω - 1MΩ		
CFS1/2	0.50W	700V	1.0Ω - 91kΩ	100kΩ - 1MΩ	1.1MΩ - 2.2MΩ	2.4MΩ - 5.1MΩ		1.0Ω - 5.1MΩ	350V	700V
CFPS1/2			2.2Ω - 91kΩ		—	—		2.2Ω - 1MΩ		
CFB1/2	0.50W	700V	2.2Ω - 100kΩ	110kΩ - 1MΩ	1.1MΩ - 2.2MΩ	2.4MΩ - 5.1MΩ		2.2Ω - 5.1MΩ	400V	800V

Operating temperature: -55°C ~ +155°C

environmental applications

Derating Curve

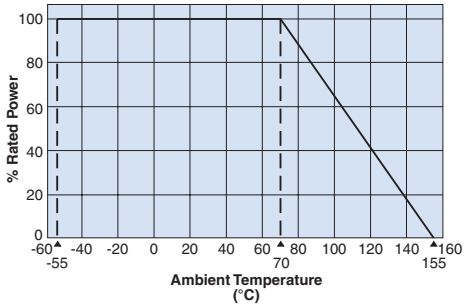

For resistors operated at an ambient temperature of 70°C or above, a power rating shall be derated in accordance with the above derating curve.

Surface Temperature Rise

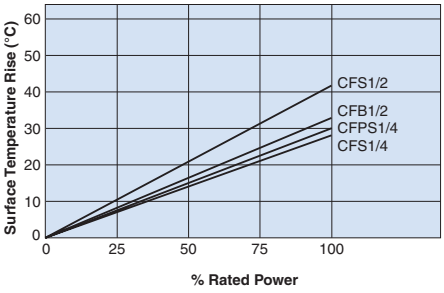

Load Life @ 70°C, 1000 Hr

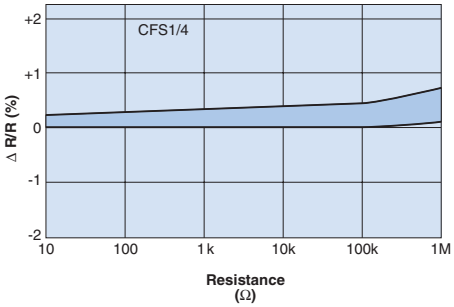

Performance Characteristics

Parameter	Requirement Δ R ±(% + 0.05Ω) Limit	Typical	Test Method
Resistance	Within specified tolerance	—	Measuring points are at 10mm ±1mm from the end cap.
T.C.R.	Within specified T.C.R.	—	Room temperature +100°C
Overload (Short time)	±1%	±0.5%	Rated voltage x 2.5 or max. overload voltage for 5 seconds, whichever is lower
Resistance to Solder Heat	±1%	±0.5%	260°C ±5°C, 10 seconds ± 1 second
Terminal Strength	No lead-coming off and loose terminals	—	Twist 360°C, 5 times
Rapid Change of Temperature	±1%	±0.5%	-55°C (30 minutes), +125°C (30 minutes), 5 cycles
Moisture Resistance	±5%	±2.5%	40°C ± 2°C, 90 - 95% RH, 1000 hours, 1.5 hr ON, 0.5 hr OFF cycle
Endurance at 70°C	±3%	±1.5%	70°C ± 2°C, 1000 hours, 1.5 hr ON, 0.5 hr OFF cycle
Resistance to Solvent (CFS & CFPS only)	No abnormality in appearance. Marking shall be easily legible.	—	Ultrasonic washing with Isopropyl alcohol for 2 minutes. Power: 0.3W/cm², f: 28kHz, temp: 35°C±5°C
Flame Retardant (CFS & CFPS only)	No evidence of flaming or self-flaming	—	Flame test: The test flame shall be applied and removed for each 15 seconds respectively to repeat the cycle 5 times. Overload flame retardant: Power (AC) corresponding to 2, 4, 8, 16 and 32 times the power rating shall be applied for each 1 minute until disconnection occurs. However the applied voltage shall not exceed 4 times the maximum operating voltage.

Specifications given herein may be changed at any time without prior notice. Please confirm technical specifications before you order and/or use. 12/24/13