THIS DRAWING IS UNPUBLISHED. RELEASED FOR PUBLICATION 20
© COPYRIGHT 20 BY - ALL RIGHTS RESERVED.

| LOC | DIST |
|---|---|
| - | - |

REVISIONS

| P | LTR | DESCRIPTION | DATE | DWN | APVD |
|---|---|---|---|---|---|
| | B | REV PER ECO 12-010940 | 7-31-12 | CT | DH |

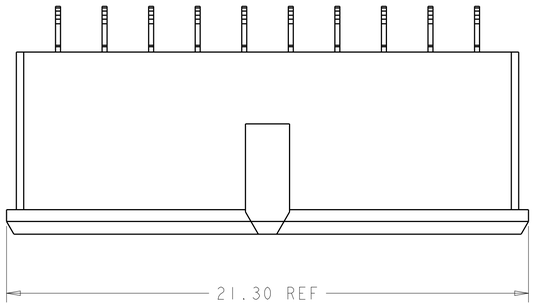


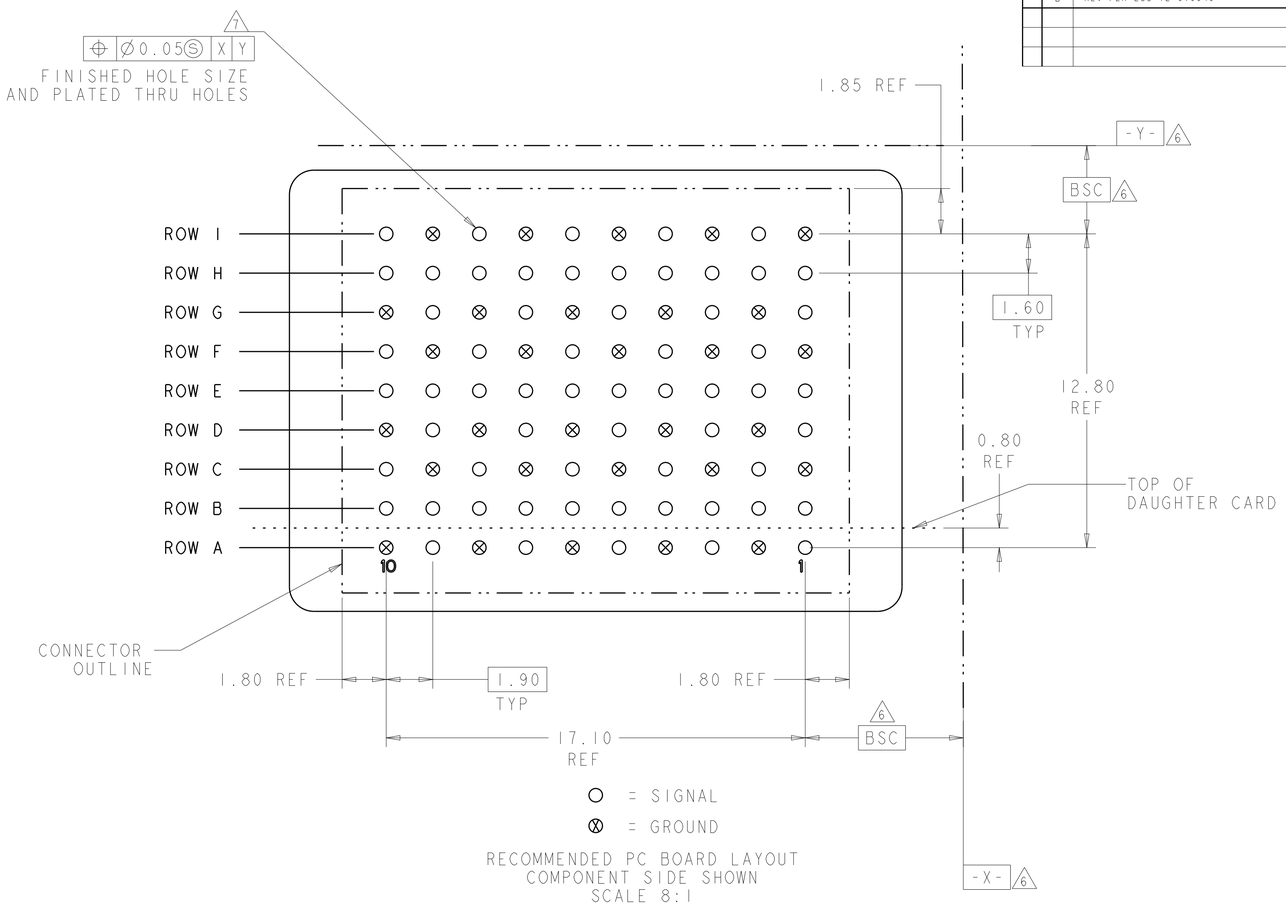


○ = SIGNAL

⊗ = GROUND

RECOMMENDED PC BOARD LAYOUT
COMPONENT SIDE SHOWN
SCALE 8:1

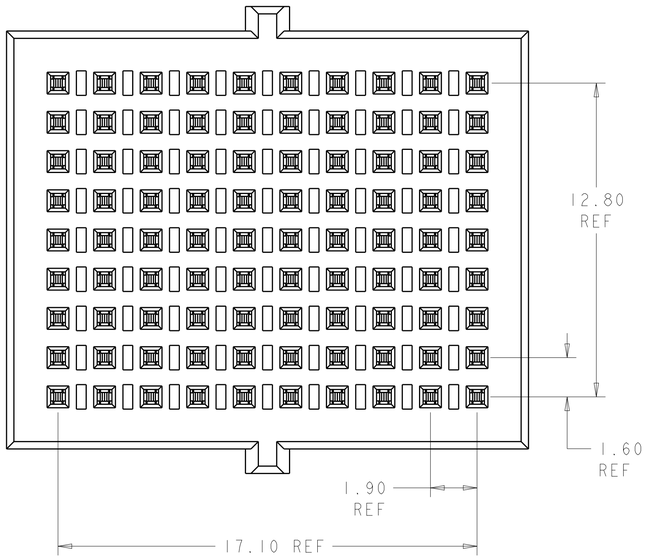


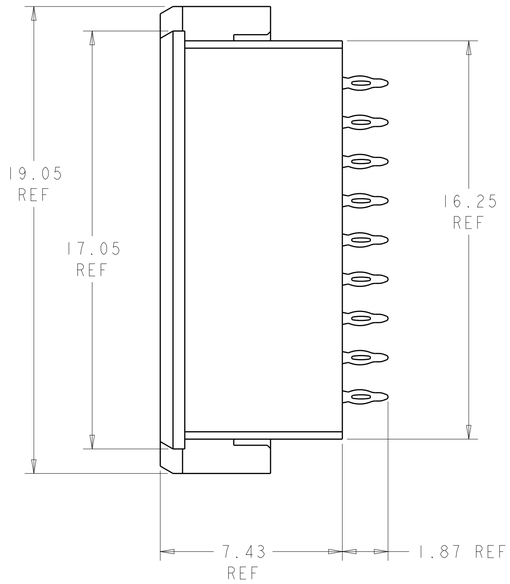


1. MATERIAL:
   CONTACT - COPPER ALLOY
   HOUSING - LCP, COLOR - BLACK
2. FINISH:
   MATING AREA: 1.27µm MIN GOLD OVER
   1.27µm MIN NICKEL
3. FINISH:
   COMPLIANT PIN AREA: 0.38µm MIN BRIGHT TIN LEAD
   OVER 1.27µm MIN NICKEL
4. FINISH:
   COMPLIANT PIN AREA: 0.38µm MIN MATTE TIN
   OVER 1.27µm MIN NICKEL
5. FINISH:
   COMPLIANT PIN AREA: 0.38µm MIN GOLD
   OVER 1.27µm MIN NICKEL
6. DATUMS AND BASIC DIMENSIONS ESTABLISHED BY CUSTOMER.
7. REFERENCE APPLICATION SPEC 114-13267 FOR RECOMMENDED PLATING THRU HOLE DIAMETER AND PLATING THICKNESS.

| 2 5 | 2102157-3 |
|---|---|
| 2 4 | 2102157-2 |
| 2 3 | 2102157-1 |
| FINISH | PART NUMBER |

THIS DRAWING IS A CONTROLLED DOCUMENT.

DIMENSIONS: mm

TOLERANCES UNLESS OTHERWISE SPECIFIED:
0 PLC ±-
1 PLC ±0.13
2 PLC ±0.05
3 PLC ±-
4 PLC ±-
ANGLES ±2°

MATERIAL - 1
FINISH - -

DWN 24JUN2009 D. BELACK
CHK 6-24-2009 A. TSANG
APVD 6-24-2009 M. McALONIS

PRODUCT SPEC 108-2409
APPLICATION SPEC 114-13267
WEIGHT ~3.83g

TE Connectivity

NAME Fortis Zd, 3-PAIR, 10-COLUMN, VERTICAL, SINGLE MODULE ASSEMBLY
-

| SIZE | CAGE CODE | DRAWING NO | RESTRICTED TO |
|---|---|---|---|
| A1 | 00779 | C-2102157 | - |

CUSTOMER DRAWING SCALE 8:1 SHEET 1 OF 1 REV B

4805 (3/11)