TANK-870e-H110

- *High-Performance 6th/7th Generation Intel® Core™ Processor*
- *Fanless Embedded Computer*

New

Features

- 6th/7th Gen Intel® Core™ processor platform with Intel® H110 chipset and DDR4 memory
- Support dual display VGA+HDMI
- On-board internal power connector for providing power to add-on cards
- Great flexibility for hardware expansion

Fanless | DDR4 2133 | Gigabit Ethernet Dual GbE | PCI/PCIe Expansion

Specifications

Model Name		TANK-870e-H110
Chassis	Color	Dark silver purple + Silver
	Dimensions (WxDxH) (mm)	132.6 x 255.2 x 190
	System Fan	Fanless
	Chassis Construction	Extruded aluminum alloys
Motherboard	CPU	Intel 7th Gen Core CPU & Intel® Core™ i7-6700TE (2.4 GHz, quad-core, TDP=35W) Intel® Core™ i5-6500TE (2.3 GHz, quad-core, TDP=35W)
	Chipset	Intel® H110
	System Memory	2 x 260-pin DDR4 SO-DIMM, one 4 GB pre-installed (system max: 32GB)
Storage	Hard Drive	1 x 2.5" SATA 6Gb/s HDD/SSD bay
I/O Interfaces	USB 3.0	4
	Ethernet	2 x RJ-45 PCIe GbE by RTL8111G controller
	COM Port	2 x RS-232/422/485 (DB-9, w/ 2.5kV isolation protection)
	Display	1 x VGA, 1 x HDMI 1.4
	Resolution	VGA: Up to 1920 X 1200@60Hz HDMI 1.4: Up to 4096x2160@24Hz
	Audio	1 x Line-out ; 1 x Mic-in
	Wireless	1 x 802.11a/b/g/n/ac (optional)
Expansions	Backplane	3A: 1 x PCIe x16 , 2 x PCI 3B: 1 x PCIe x16 , 1 x PCIe x4, 1 x PCI 3C: 3 x PCI
	PCIe Mini	1 x Full-size PCIe Mini slot 1 x Full-size PCIe Mini slot (supports mSATA, colay with SATA)
Power	Power Input	DC Jack: 9 V~36 V DC Terminal Block: 9 V~36 V DC
	Power Consumption	19 V@3.44 A (Intel® Core™ i7-6700TE with 8 GB memory)
	Internal Power Connector	5V@3A or 12V@3A
Reliability	Mounting	Wall mount & DIN Rail
	Operating Temperature	i7-6700TE -20°C ~ 50°C with air flow (SSD), 10% ~ 95%, non-condensing i5-6500TE -20°C ~ 60°C with air flow (SSD), 10% ~ 95%, non-condensing
	Storage Temperature	-40ºC ~ 85ºC with air flow (SSD), 5% ~ 90%, non-condensing
	Operating Shock	Half-sine wave shock 5G, 11ms, 100 shocks per axis
	Non-Operating Shock	Half-sine wave shock 15G, 11ms, 100 shocks per axis
	Operating Vibration	MIL-STD-810G 514.6C-1 (with SSD)
	Non-Operation Vibration	Half-sind mode IEC-60068-2-06
	Weight (Net/Gross)	4.2 kg/6.3 kg
	Safety/EMC	CE/FCC
OS	Supported OS	Microsoft® Windows® 8 Embedded, Microsoft® Windows® Embedded Standard 7 E, Microsoft® Windows® 10 IoT Enterprise

Versatile Expansion Interface

Backplane	3A HPE-3S6		3B HPE-3S7			3C HPE-3PCI
Slot	2 x PCI	1 x PCIe x16	1 x PCI	1 x PCIe x4	1 x PCIe x16	3 x PCI
Signal	PCI	PCIe x16	PCI	PCIe x1	PCIe x16	PCI

Fully Integrated I/O

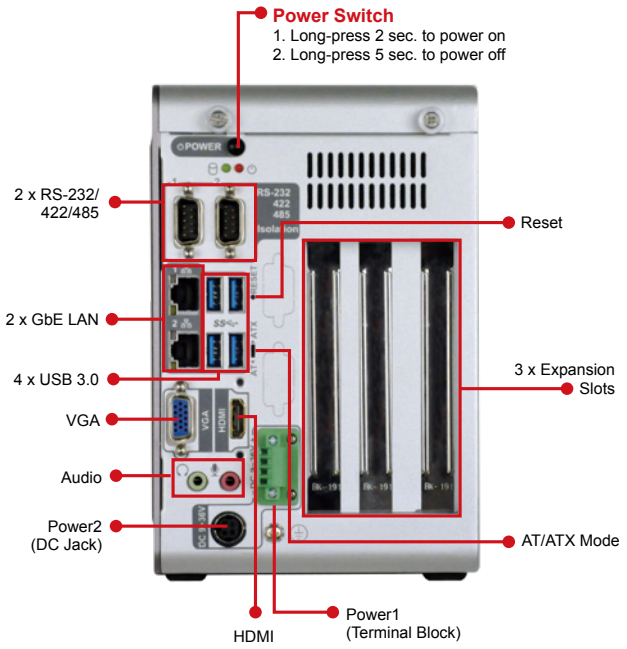

Dimensions (Unit: mm)

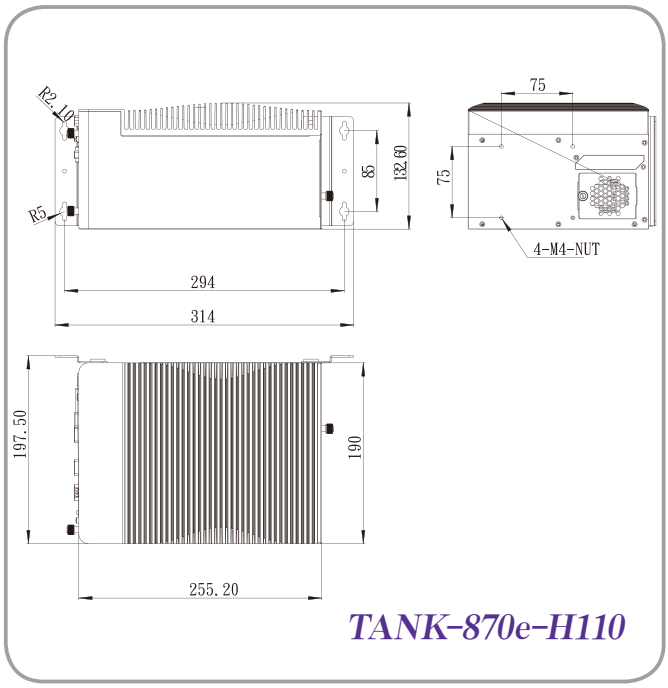

Ordering Information

Part No.	Description
TANK-870e-H110-i5/4G/3A-R10	Ruggedized Fanless embedded system with Intel® Core i5-6500TE 2.3GHz, (up to 3.3 GHz, Quad Core, TDP 35W), 4GB DDR4 pre-installed memory, 1 x PCIe by 16 & 2 x PCI expansion, VGA/HDMI, 9~36V DC, RoHS
TANK-870e-H110-i5/4G/3B-R10	Ruggedized Fanless embedded system with Intel® Core i5-6500TE 2.3GHz, (up to 3.3 GHz, Quad Core, TDP 35W), 4GB DDR4 pre-installed memory, 1 x PCIe by 16 & 1 x PCIe by 1 & 1 x PCI expansion, VGA/HDMI, 9~36V DC, RoHS
TANK-870e-H110-i5/4G/3C-R10	Ruggedized Fanless embedded system with Intel® Core™ i5-6500TE 2.3 GHz (up to 3.3 GHz, quad core, TDP 35W), 4GB DDR4 pre-installed memory, 3 x PCI expansion, VGA/HDMI, 9~36V DC, RoHS
TANK-870e-H110-i7/4G/3A-R10	Ruggedized Fanless embedded system with Intel® Core i7-6700TE 2.4GHz, (up to 3.4 GHz, Quad Core, TDP 35W), 4GB DDR4 pre-installed memory, 1 x PCIe by 16 & 2 x PCI expansion, VGA/HDMI, 9~36V DC, RoHS
TANK-870e-H110-i7/4G/3B-R10	Ruggedized Fanless embedded system with Intel® Core i7-6700TE 2.4GHz, (up to 3.4 GHz, Quad Core, TDP 35W), 4GB DDR4 pre-installed memory, 1 x PCIe by 16 & 1 x PCIe by 1 & 1 x PCI expansion, VGA/HDMI, 9~36V DC, RoHS
TANK-870e-H110-i7/4G/3C-R10	Ruggedized Fanless embedded system with Intel® Core™ i7-6700TE 2.4 GHz (up to 3.4 GHz, quad core, TDP 35W), 4GB DDR4 pre-installed memory, 3 x PCI expansion, VGA/HDMI, 9~36V DC, RoHS

Options

Part No.	Description
32702-000400-200-RS	European power cord
63040-010120-210-RS	Power adapter, FSP120-ABBN2, 9NA1205302, Active PFC, Vin:90~264VAC, 120W, plug=6.5mm, cable=1500mm, Erp (no load 0.15W), Vout:19VDC, 4-pin DIN with lock, CCL, RoHS
19Z00-000630-00-RS	Fan, +12V DC, 4-pin, 40 mm x 40 mm x10 mm, 6500RPM, RoHS
EMB-WIFI-KIT11-R20	1T1R wifi module kit for embedded system, IEEE802.11a/b/g/n/ac WiFi with Bluetooth 4.0/3.0+HS, 1 x wifi module, 2 x 400mm RF cable, 2 x Antenna, RoHS
DK-75-R10	DIN mount kit adapter for VESA-75
TANK-870e-H110-WES7E64-R10	OS Image with Windows® Embedded Standard 7 E 64-bit for TANK-870e-H110 Series, with DVD-ROM, RoHS
TANK-870e-H110-W10E64-H-R10	OS Image with Windows Embedded Standard 10 E High End 64-bit for TANK-870e-H110-i7 Series, with DVD-ROM, RoHS
TANK-870e-H110-W10E64-V-R10	OS Image with Windows Embedded Standard 10 E Value 64-bit for TANK-870e-H110-i5 Series, with DVD-ROM, RoHS

Packing List

1 x Chassis Screw	1 x Mounting Bracket