E.2: Validé

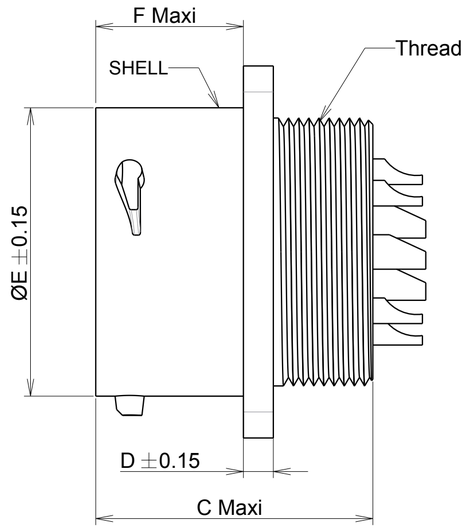

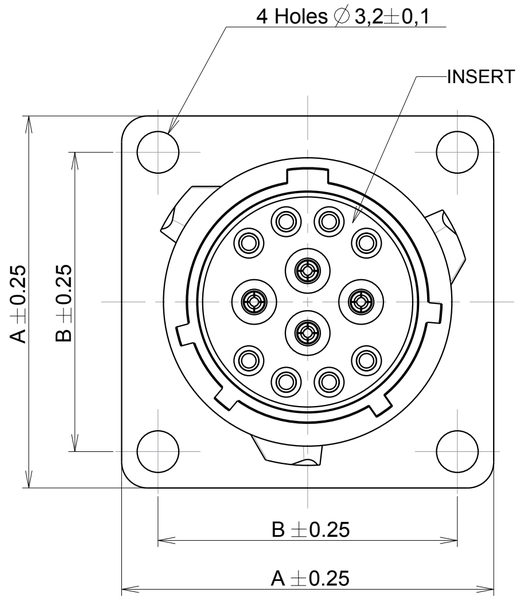

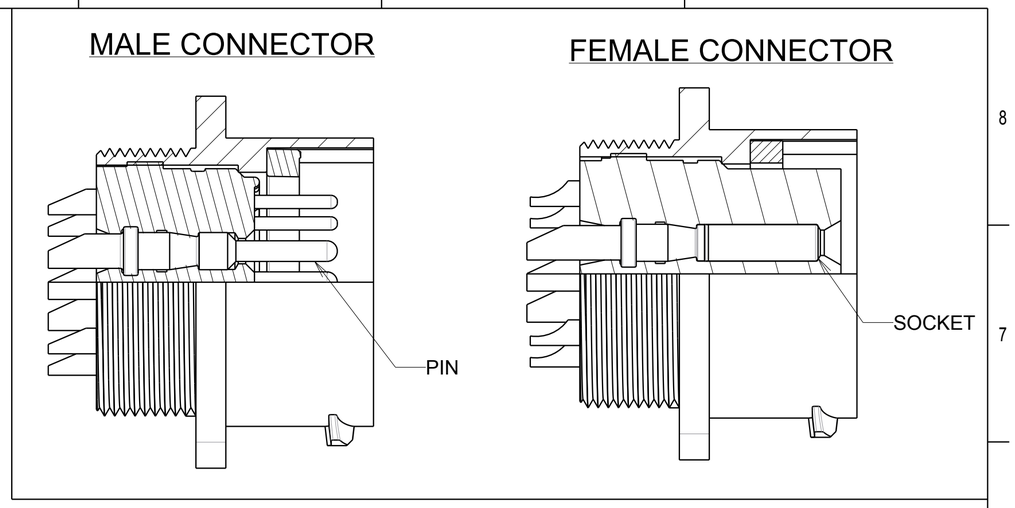

SHELL SIZE	A ±0.25	B ±0.25	C Maxi	D ±0.15	ØE ±0.15	F Maxi	G ±0.25	H ±0.10	Thread
8	21.00	15.10	21.50	2.30	11.90	11.70	15.10	12.50	7/16 28 UNEF Class 2A
10	23.80	18.30	21.50	2.30	14.90	11.70	18.30	15.10	9/16 24 UNEF Class 2A
12	26.20	20.60	21.50	2.30	18.95	11.70	20.60	18.20	11/16 24 UNEF Class 2A
14	28.60	23.00	21.50	2.30	22.15	11.70	23.00	21.40	13/16 20 UNEF Class 2A

UTS0 14 E 12 P . XX

- Square flange receptacle UTS
- Shell size
- E = Handsolder contacts
- Insert arrangement (See table)
- P = Male contact
  S = Female contact
- Orientations
  Normal (no digit), W, X, Y, Z = different orientations
- Specification

MATERIAL :

Shell:PBT UL94 V-0 Black color
Insert:Polychloroprene
Seal gasket :Sealing IP68/69K : Silicone
O'seal : Nitril
Contact: brass + gold plated

PERFORMANCE CHARACTERISTICS :

Operating temperature:-40° C up to 105° C
Insulation resistance:5000 MΩ min
Test potential:1500Vrms for #20 layout
Corrosion salt spray:500 hours
Durability:250 matings and unmatings
Sealing in mated and unmated conditions:
-IP68 1 bar during 1 week : immersion under 10 m of water. (IEC 60529)
-IP69K : exposure to high pressure water of cleaning equipement(DIN 40050)

NOTE:

Insert arrangements : refer to C144-UTS1-A

PANEL CUT OUT

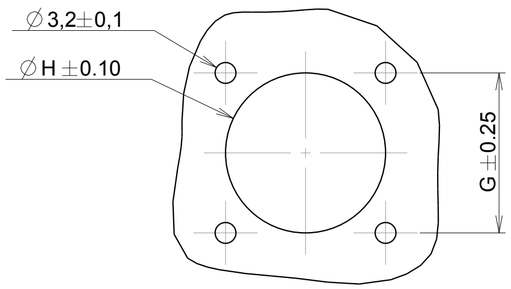

Country	Jurisdiction & Control List
FR	NOT LISTED

P/N : SEE TABLE

ISS	DATE	Latest modification - by:	COURTOIS L.	MOD N°
E	02/11/2017	Updating shell material		21774A

Designed by: SORIN V. Date: 26/10/07 — CUSTOMER DRAWING

TITLE: SQUARE FLANGE RECEPTACLE
UTS HI SEAL

Scale 3/1 — General linear Tolerances: ± 0.1 — NPRDS / PROJECT UTS

SOURIAU — WWW.SOURIAU.COM

This document is the property of SOURIAU
It must not be reproduced or communicated without permission

SOURIAU shall not be liable for any non-conformity or damage due to a use of the Products which does not comply with the Specifications issued by either of the Parties or by a third party (professional recommendation, technical notice.)

FORMAT A2 — SOURIAU DRG N° C044-UTS1-A — SHEET 1 / 1