Quad, 12-Bit DAC Voltage Output with Readback

Data Sheet

DAC8412/DAC8413

FEATURES

+5 V to ±15 V operation
Unipolar or bipolar operation
True voltage output
Double-buffered inputs
Reset to minimum (DAC8413) or center scale (DAC8412)
Fast bus access time
Readback

APPLICATIONS

Automatic test equipment
Digitally controlled calibration
Servo controls
Process control equipment

FUNCTIONAL BLOCK DIAGRAM

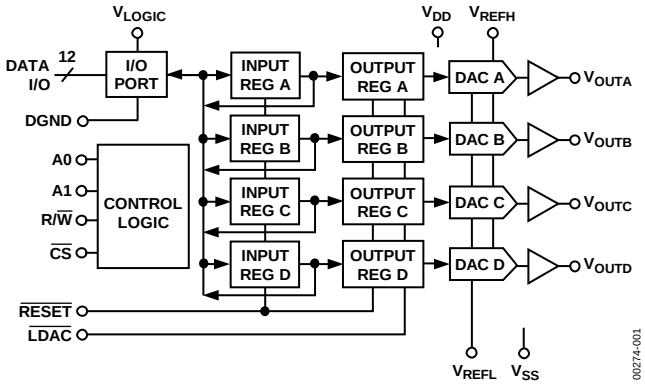

Figure 1.

GENERAL DESCRIPTION

The DAC8412/DAC8413 are quad, 12-bit voltage output DACs with readback capability. Built using a complementary BiCMOS process, these monolithic DACs offer the user very high package density.

Output voltage swing is set by the two reference inputs V_{REFH} and V_{REFL}. By setting the V_{REFL} input to 0 V and V_{REFH} to a positive voltage, the DAC provides a unipolar positive output range. A similar configuration with V_{REFH} at 0 V and V_{REFL} at a negative voltage provides a unipolar negative output range. Bipolar outputs are configured by connecting both V_{REFH} and V_{REFL} to nonzero voltages. This method of setting output voltage range has advantages over other bipolar offsetting methods because it is not dependent on internal and external resistors with different temperature coefficients.

Digital controls allow the user to load or read back data from any DAC, load any DAC, and transfer data to all DACs at one time.

An active low $\overline{\text{RESET}}$ loads all DAC output registers to midscale for the DAC8412 and zero scale for the DAC8413.

The DAC8412/DAC8413 are available in 28-lead plastic DIP, 28-lead ceramic DIP, 28-lead PLCC, and 28-lead LCC packages.

They can be operated from a wide variety of supply and reference voltages with supplies ranging from single +5 V to ±15 V, and references from +2.5 V to ±10 V. Power dissipation is less than 330 mW with ±15 V supplies and only 60 mW with a +5 V supply.

For MIL-STD-883 applications, contact your local Analog Devices, Inc. sales office for the DAC8412/DAC8413/883 data sheet, which specifies operation over the −55°C to +125°C temperature range. All 883 parts are also available on Standard Military Drawings 5962-91 76401MXA through 76404M3A.

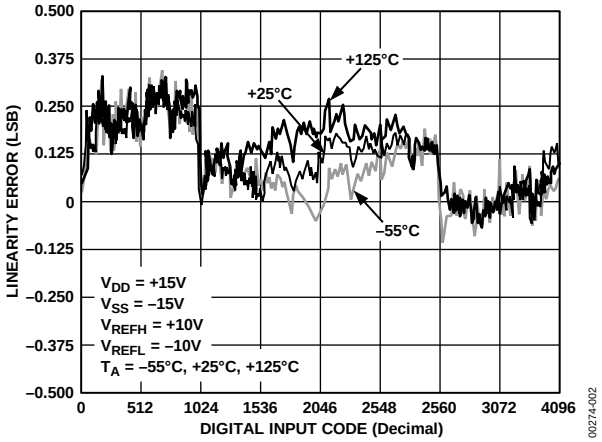

Figure 2. INL vs. Code Over Temperature

Information furnished by Analog Devices is believed to be accurate and reliable. However, no responsibility is assumed by Analog Devices for its use, nor for any infringements of patents or other rights of third parties that may result from its use. Specifications subject to change without notice. No license is granted by implication or otherwise under any patent or patent rights of Analog Devices. Trademarks and registered trademarks are the property of their respective owners.

One Technology Way, P.O. Box 9106, Norwood, MA 02062-9106, U.S.A.
Tel: 781.329.4700

©2000–2013 Analog Devices, Inc. All rights reserved.

TABLE OF CONTENTS

Features ... 1
Applications ... 1
Functional Block Diagram ... 1
General Description ... 1
aRevision History ... 2
Specifications ... 3
Electrical Characteristics ... 3
Absolute Maximum Ratings ... 7
Thermal Resistance ... 7
ESD Caution ... 7
Pin Configuration and Function Descriptions ... 8
Typical Performance Characteristics ... 9
Theory of Operation ... 14
Introduction ... 14
DACs ... 14
Glitch ... 14
Reference Inputs ... 14
Digital I/O ... 14
Coding ... 14
Supplies ... 15
Amplifiers ... 15
Reference Configurations ... 16
Single +5 V Supply Operation ... 17
Outline Dimensions ... 18
Ordering Guide ... 20

REVISION HISTORY

4/13—Rev. F to Rev. G

Changed Reference Low Input Current from 0 mA (min), 2 mA (typ), 2.75 mA (max) to −2.75 mA (min), −2 mA (typ), 0 mA (max); Table 1 ... 3
Changes to Reference Configurations Section ... 17

9/09—Rev. E to Rev. F

Updated Figure Numbering ... Universal
Removed Figure 7 ... 6
Changes to Ordering Guide ... 20

6/07—Rev. D to Rev. E

Updated Format ... Universal
Added CERDIP Package ... Universal
Changes to Specifications Section ... 3
Changes to Absolute Maximum Ratings Section ... 7
Updated Outline Dimensions ... 18
Changes to Ordering Guide ... 20

3/00—Rev. C to Rev. D

SPECIFICATIONS

ELECTRICAL CHARACTERISTICS

V_{DD} = +15.0 V, V_{SS} = −15.0 V, V_{LOGIC} = +5.0 V, V_{REFH} = +10.0 V, V_{REFL} = −10.0 V,−40°C ≤ T_A ≤ +85°C, unless otherwise noted.[1]

Table 1.

Parameter	Symbol	Conditions	Min	Typ	Max	Unit
ACCURACY						
Integral Nonlinearity Error	INL	E grade		±0.25	±0.5	LSB
		F grade			±1	LSB
Differential Nonlinearity Error	DNL	Monotonic over temperature	−1			LSB
Min-Scale Error	V_{ZSE}	R_L = 2 kΩ			±2	LSB
Full-Scale Error	V_{FSE}	R_L = 2 kΩ			±2	LSB
Min-Scale Temperature Coefficient	TCV_{ZSE}	R_L = 2 kΩ		15		ppm/°C
Full-Scale Temperature Coefficient	TCV_{FSE}	R_L = 2 kΩ		20		ppm/°C
Linearity Matching		Adjacent DAC Matching		±1		LSB
REFERENCE						
Positive Reference Input Voltage Range[2]			V_{REFL} + 2.5		V_{DD} − 2.5	V
Negative Reference Input Voltage Range[2]			−10		V_{REFH} − 2.5	V
Reference High Input Current	I_{REFH}		−2.75	+1.5	+2.75	mA
Reference Low Input Current	I_{REFL}		−2.75	−2	0	mA
Large Signal Bandwidth	BW	−3 dB, V_{REFH} = 0 V to 10 V p-p		160		kHz
AMPLIFIER CHARACTERISTICS						
Output Current	I_{OUT}	R_L = 2 kΩ, C_L = 100 pF	−5		+5	mA
Settling Time	t_S	To 0.01%, 10 V step, R_L = 1 kΩ		10		µs
Slew Rate	SR	10% to 90%		2.2		V/µs
Analog Crosstalk				72		dB
LOGIC CHARACTERISTICS						
Logic Input High Voltage	V_{INH}	T_A = 25°C	2.4			V
Logic Input Low Voltage	V_{INL}	T_A = 25°C			0.8	V
Logic Output High Voltage	V_{OH}	I_{OH} = 0.4 mA	2.4			V
Logic Output Low Voltage	V_{OL}	I_{OL} = −1.6 mA			0.4	V
Logic Input Current	I_{IN}				1	µA
Input Capacitance	C_{IN}			8		pF
Digital Feedthrough[3]		V_{REFH} = 2.5 V, V_{REFL} = 0 V		5		nV-sec
LOGIC TIMING CHARACTERISTICS[3, 4]						
Chip Select Write Pulse Width	t_{WCS}		80			ns
Write Setup	t_{WS}	t_{WCS} = 80 ns	0			ns
Write Hold	t_{WH}	t_{WCS} = 80 ns	0			ns
Address Setup	t_{AS}		0			ns
Address Hold	t_{AH}		0			ns
Load Setup	t_{LS}		70			ns
Load Hold	t_{LH}		30			ns
Write Data Setup	t_{WDS}	t_{WCS} = 80 ns	20			ns
Write Data Hold	t_{WDH}	t_{WCS} = 80 ns	0			ns
Load Data Pulse Width	t_{LDW}		170			ns
Reset Pulse Width	t_{RESET}		140			ns
Chip Select Read Pulse Width	t_{RCS}		130			ns
Read Data Hold	t_{RDH}	t_{RCS} = 130 ns	0			ns
Read Data Setup	t_{RDS}	t_{RCS} = 130 ns	0			ns
Data to High-Z	t_{DZ}	C_L = 10 pF			200	ns
Chip Select to Data	t_{CSD}	C_L = 100 pF			160	ns

Parameter	Symbol	Conditions	Min	Typ	Max	Unit
SUPPLY CHARACTERISTICS						
Power Supply Sensitivity	PSS	14.25 V ≤ V_{DD} ≤ 15.75 V			150	ppm/V
Positive Supply Current	I_{DD}	V_{REFH} = 2.5 V		8.5	12	mA
Negative Supply Current	I_{SS}		−10	−6.5		mA
Power Dissipation	P_{DISS}				330	mW

[1] All supplies can be varied ±5%, and operation is guaranteed. Device is tested with nominal supplies.
[2] Operation is guaranteed over this reference range, but linearity is neither tested nor guaranteed.
[3] All parameters are guaranteed by design.
[4] All input control signals are specified with tr = tf = 5 ns (10% to 90% of 5 V) and timed from a voltage level of 1.6 V.

V_{DD} = V_{LOGIC} = +5.0 V ± 5%, V_{SS} = 0.0 V, V_{REFH} = +2.5 V, V_{REFL} = 0.0 V, V_{SS} = −5.0 V ± 5%, V_{REFL} = −2.5 V, −40°C ≤ T_A ≤ +85°C, unless otherwise noted.[1]

Table 2.

Parameter	Symbol	Conditions	Min	Typ	Max	Units
ACCURACY						
Integral Nonlinearity Error	INL	E grade		±0.5	±1	LSB
		F grade			±2	LSB
		V_{SS} = 0.0 V, E grade[2]			±2	LSB
		V_{SS} = 0.0 V, F grade[2]			±4	LSB
Differential Nonlinearity Error	DNL	Monotonic over temperature	−1			LSB
Min-Scale Error	V_{ZSE}	V_{SS} = −5.0 V			±4	LSB
Full-Scale Error	V_{FSE}	V_{SS} = −5.0 V			±4	LSB
Min-Scale Error	V_{ZSE}	V_{SS} = 0.0 V			±8	LSB
Full-Scale Error	V_{FSE}	V_{SS} = 0.0 V			±8	LSB
Min-Scale Temperature Coefficient	TCV_{ZSE}			100		ppm/°C
Full-Scale Temperature Coefficient	TCV_{FSE}			100		ppm/°C
Linearity Matching		Adjacent DAC matching		±1		LSB
REFERENCE						
Positive Reference Input Voltage Range[3]			V_{REFL} + 2.5		V_{DD} − 2.5	V
Negative Reference Input Voltage Range		V_{SS} = 0.0 V	0		V_{REFH} − 2.5	V
		V_{SS} = −5.0 V	−2.5		V_{REFH} − 2.5	V
Reference High Input Current	I_{REFH}	Code 0x000	−1.0		+1.0	mA
Large Signal Bandwidth	BW	−3 dB, V_{REFH} = 0 V to 2.5 V p-p		450		kHz
AMPLIFIER CHARACTERISTICS						
Output Current	I_{OUT}	R_L = 2 kΩ, C_L = 100 pF	−1.25		+1.25	mA
Settling Time	t_S	To 0.01%, 2.5 V step, R_L = 1 kΩ		7		µs
Slew Rate	SR	10% to 90%		2.2		V/µs
LOGIC CHARACTERISTICS						
Logic Input High Voltage	V_{INH}	T_A = 25°C	2.4			V
Logic Input Low Voltage	V_{INL}	T_A = 25°C			0.8	V
Logic Output High Voltage	V_{OH}	I_{OH} = 0.4 mA	2.4			V
Logic Output Low Voltage	V_{OL}	I_{OL} = −1.6 mA			0.45	V
Logic Input Current	I_{IN}				1	µA
Input Capacitance	C_{IN}			8		pF
LOGIC TIMING CHARACTERISTICS[4, 5]						
Chip Select Write Pulse Width	t_{WCS}		150			ns
Write Setup	t_{WS}	t_{WCS} = 150 ns	0			ns
Write Hold	t_{WH}	t_{WCS} = 150 ns	0			ns
Address Setup	t_{AS}		0			ns
Address Hold	t_{AH}		0			ns
Load Setup	t_{LS}		70			ns
Load Hold	t_{LH}		50			ns

Parameter	Symbol	Conditions	Min	Typ	Max	Units
Write Data Setup	t_{WDS}	t_{WCS} = 150 ns	20			ns
Write Data Hold	t_{WDH}	t_{WCS} = 150 ns	0			ns
Load Data Pulse Width	t_{LDW}		180			ns
Reset Pulse Width	t_{RESET}		150			ns
Chip Select Read Pulse Width	t_{RCS}		170			ns
Read Data Hold	t_{RDH}	t_{RCS} = 170 ns	20			ns
Read Data Setup	t_{RDS}	t_{RCS} = 170 ns	0			ns
Data to High-Z	t_{DZ}	C_L = 10 pF			200	ns
Chip Select to Data	t_{CSD}	C_L = 100 pF			320	ns
SUPPLY CHARACTERISTICS						
Power Supply Sensitivity	PSS			100		ppm/V
Positive Supply Current	I_{DD}			7	12	mA
Negative Supply Current	I_{SS}	V_{SS} = −5.0 V	−10			mA
Power Dissipation	P_{DISS}	V_{SS} = 0 V		60		mW
		V_{SS} = −5.0 V		110		mW

[1] All supplies can be varied ±5%, and operation is guaranteed. Device is tested with V_{DD} = 4.75 V.
[2] For single-supply operation only (V_{REFL} = 0.0 V, V_{SS} = 0.0 V). Due to internal offset errors, INL and DNL are measured beginning at 0x005.
[3] Operation is guaranteed over this reference range, but linearity is neither tested nor guaranteed.
[4] All parameters are guaranteed by design.
[5] All input control signals are specified with tr = tf = 5 ns (10% to 90% of 5 V) and timed from a voltage level of 1.6 V.

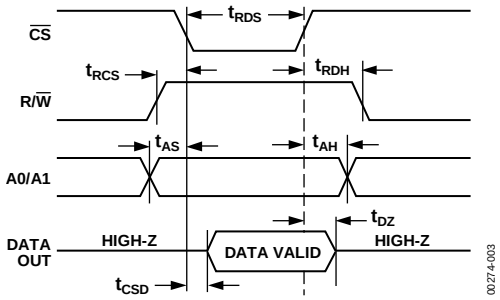

Figure 3. Data Output (Read Timing)

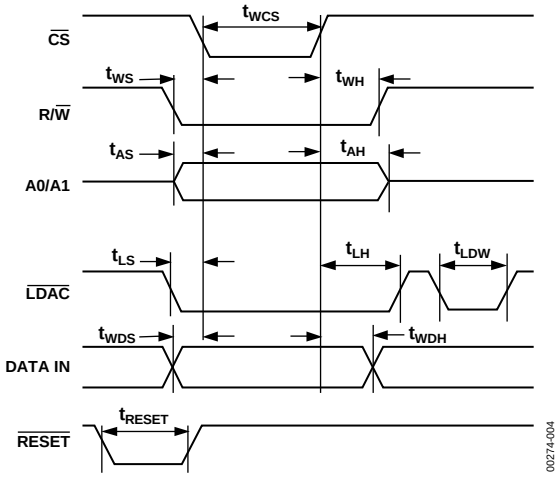

Figure 4. Data Write (Input and Output Registers) Timing

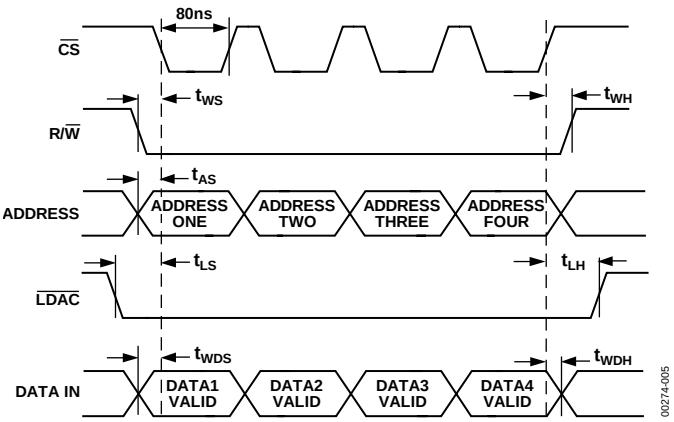

Figure 5. Single-Buffer Mode

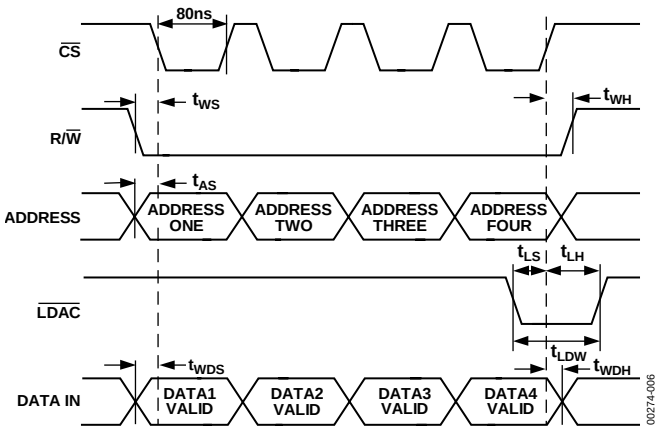

Figure 6. Double-Buffer Mode

ABSOLUTE MAXIMUM RATINGS

T_A = +25°C, unless otherwise noted.

Table 3.

Parameter	Rating
V_{SS} to V_{DD}	−0.3 V, +33.0 V
V_{SS} to V_{LOGIC}	−0.3 V, +33.0 V
V_{LOGIC} to DGND	−0.3 V, +7.0 V
V_{SS} to V_{REFL}	−0.3 V, +V_{SS} − 2.0 V
V_{REFH} to V_{DD}	+2.0 V, +33.0 V
V_{REFH} to V_{REFL}	+2.0 V, V_{SS} − V_{DD}
Current into Any V_{SS} pin	±15 mA
Digital Input Voltage to DGND	−0.3 V, V_{LOGIC} + 0.3 V
Digital Output Voltage to DGND	−0.3 V, +7.0 V
Operating Temperature Range	
EP, FP, FPC	−40°C to +85°C
AT, BT, BTC	−55°C to +125°C
Junction Temperature	150°C
Storage Temperature Range	−65°C to +150°C
Power Dissipation Package	1000 mW
Lead Temperature	JEDEC Industry Standard
Soldering	J-STD-020

Stresses above those listed under Absolute Maximum Ratings may cause permanent damage to the device. This is a stress rating only; functional operation of the device at these or any other conditions above those indicated in the operational section of this specification is not implied. Exposure to absolute maximum rating conditions for extended periods may affect device reliability.

THERMAL RESISTANCE

θ_{JA} is specified for the worst-case mounting conditions, that is, a device in socket.

Table 4. Thermal Resistance

Package Type	θ_{JA}	θ_{JC}	Unit
28-Lead Plastic DIP (PDIP)	48	22	°C/W
28-Terminal Ceramic Leadless Chip Carrier (LLC)	70	28	°C/W
28-Lead Plastic Leaded Chip Carrier (PLLC)	63	25	°C/W
28-Lead Ceramic Dual In-Line Package (CERDIP)	51	9	°C/W

ESD CAUTION

ESD (electrostatic discharge) sensitive device. Charged devices and circuit boards can discharge without detection. Although this product features patented or proprietary protection circuitry, damage may occur on devices subjected to high energy ESD. Therefore, proper ESD precautions should be taken to avoid performance degradation or loss of functionality.

PIN CONFIGURATION AND FUNCTION DESCRIPTIONS

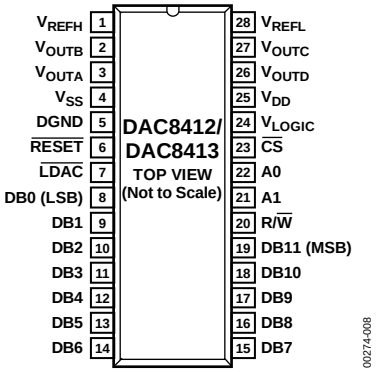

Figure 7. PDIP/CERDIP

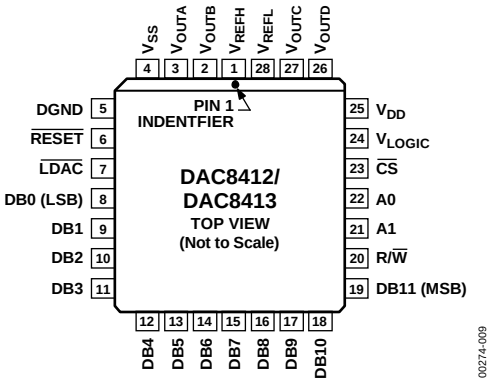

Figure 8. PLCC

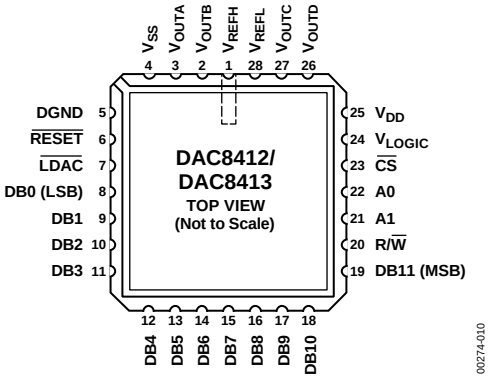

Figure 9. LCC

Table 5. Pin Function Descriptions

Pin Number	Mnemonic	Description
1	V_{REFH}	High-Side DAC Reference Input.
2	V_{OUTB}	DAC B Output.
3	V_{OUTA}	DAC A Output.
4	V_{SS}	Lower Rail Power Supply.
5	DGND	Digital Ground.
6	$\overline{RESET}$	Reset Input and Output Registers to all 0s, Enabled at Active Low.
7	$\overline{LDAC}$	Load Data to DAC, Enabled at Active Low.
8	DB0	Data Bit 0, LSB.
9	DB1	Data Bit 1.
10	DB2	Data Bit 2.
11	DB3	Data Bit 3.
12	DB4	Data Bit 4.
13	DB5	Data Bit 5.
14	DB6	Data Bit 6.
15	DB7	Data Bit 7.
16	DB8	Data Bit 8.
17	DB9	Data Bit 9.
18	DB10	Data Bit 10.
19	DB11	Data Bit 11, MSB.
20	$R/\overline{W}$	Active Low to Write Data to DAC. Active high to readback previous data at data bit pins with V_{LOGIC} connected to 5 V.
21	A1	Address Bit 1.
22	A0	Address Bit 0.
23	$\overline{CS}$	Chip Select, Enabled at Active Low.
24	V_{LOGIC}	Voltage Supply for Readback Function. Can be open circuit if not used.
25	V_{DD}	Upper Rail Power Supply.
26	V_{OUTD}	DAC D Output.
27	V_{OUTC}	DAC C Output.
28	V_{REFL}	Low-Side DAC Reference Input.

TYPICAL PERFORMANCE CHARACTERISTICS

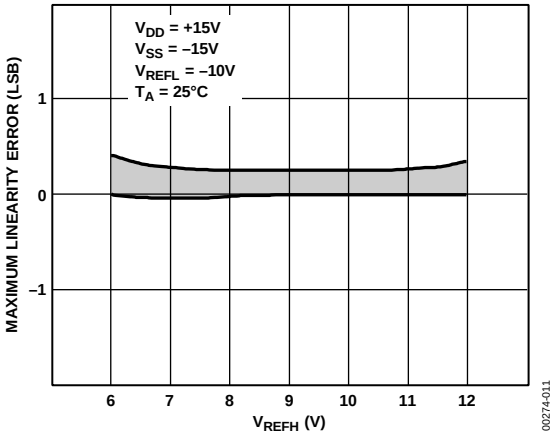

Figure 10. DNL vs. V_{REFH}

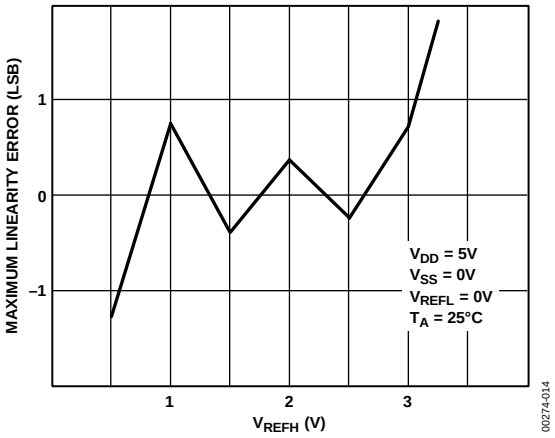

Figure 11. INL vs. V_{REFH}

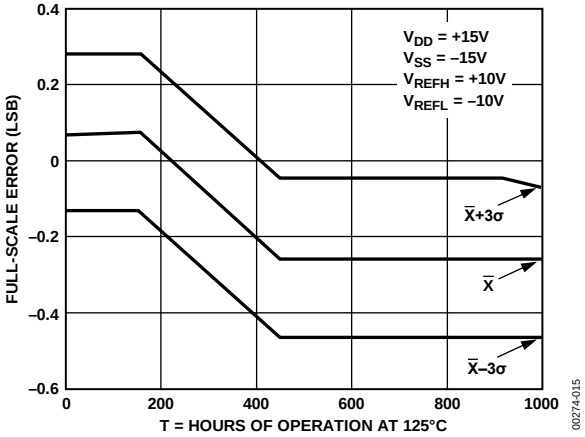

Figure 12. Full-Scale Error vs. Time Accelerated by Burn-in

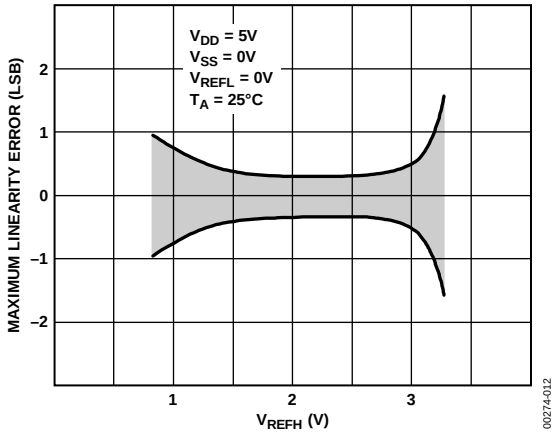

Figure 13. DNL vs. V_{REFH}

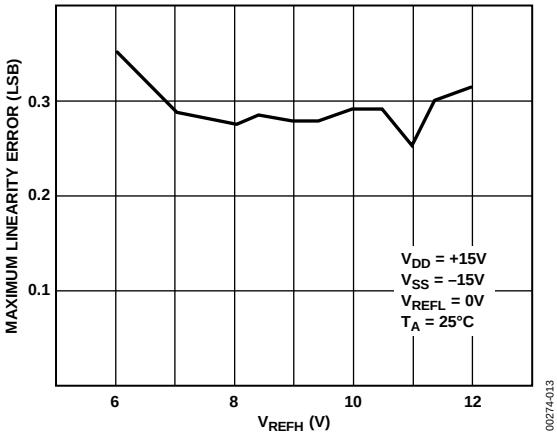

Figure 14. INL vs.V_{REFH}

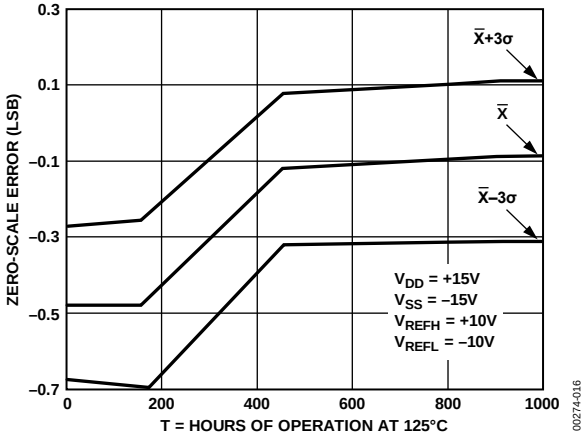

Figure 15. Zero-Scale Error vs. Time Accelerated by Burn-In

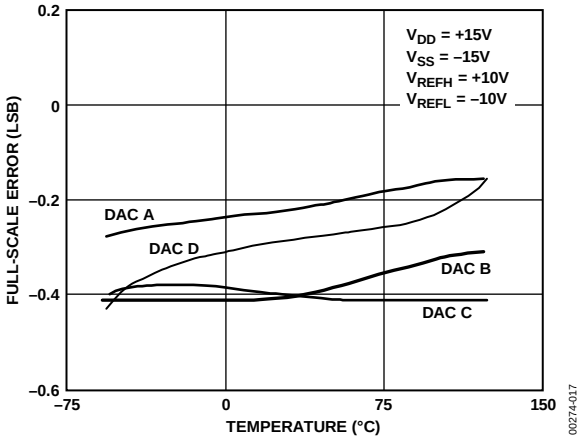

Figure 16. Full-Scale Error vs. Temperature

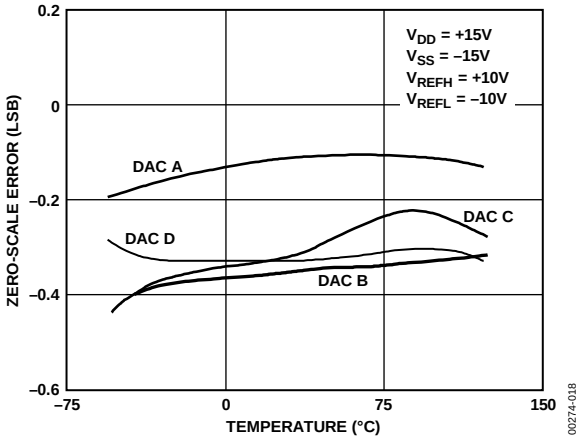

Figure 17. Zero-Scale Error vs. Temperature

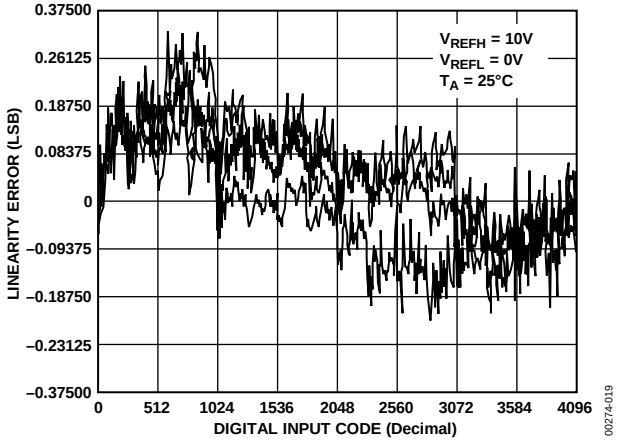

Figure 18. Channel-to-Channel Matching (V_{SUPPLY} = ±15 V)

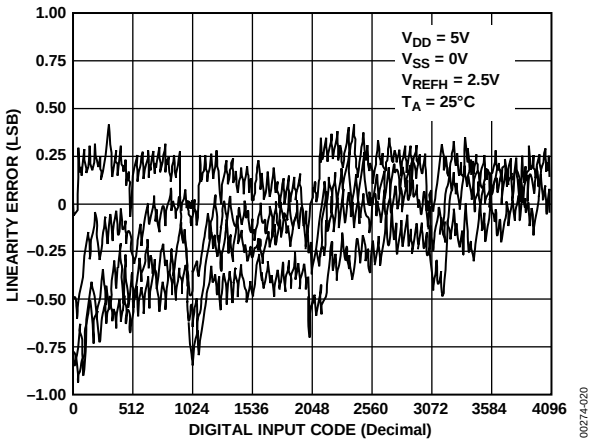

Figure 19. Channel-to-Channel Matching (V_{SUPPLY} = +5 V/GND)

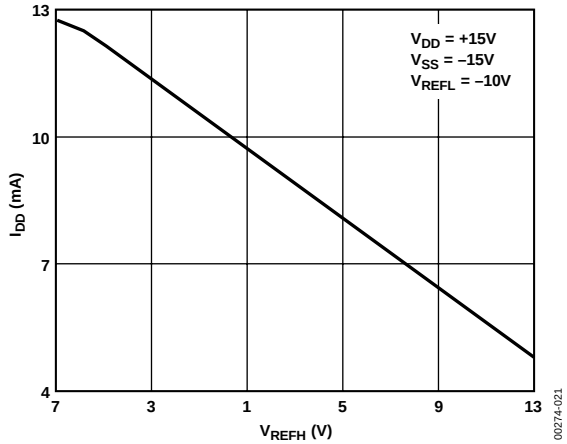

Figure 20. I_{DD} vs. V_{REFH} (All DACs High)

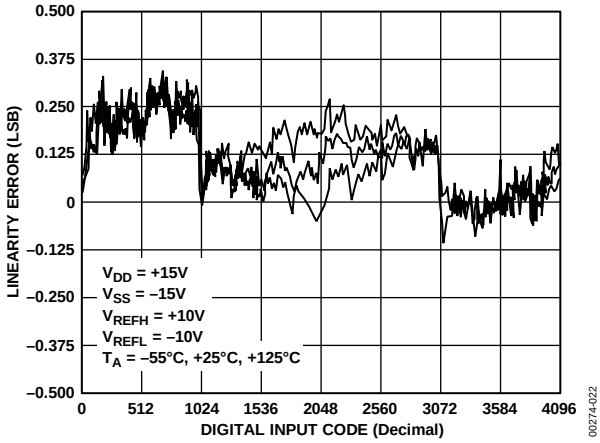

Figure 21. INL vs. Code

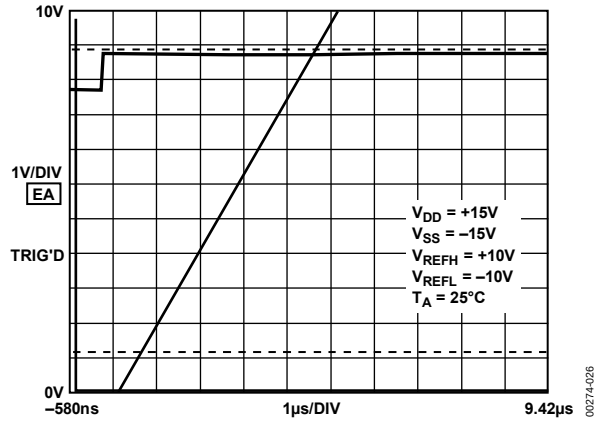

Figure 22. Positive Slew Rate

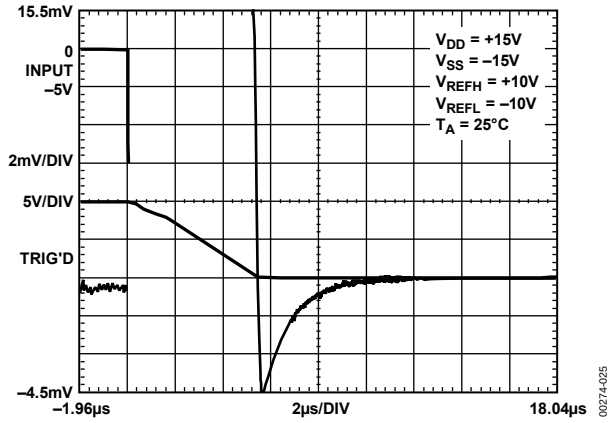

Figure 23. Settling Time (Negative)

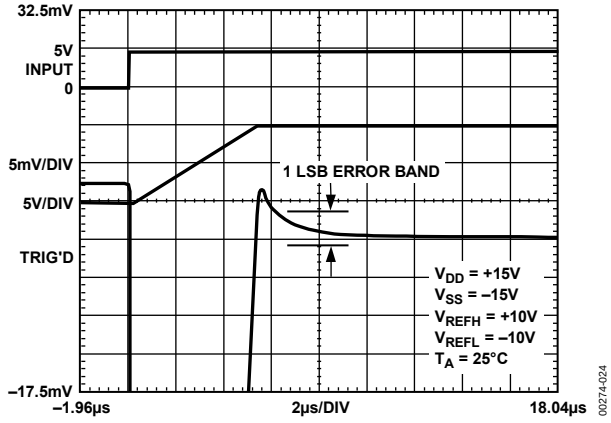

Figure 24. Settling Time (Positive)

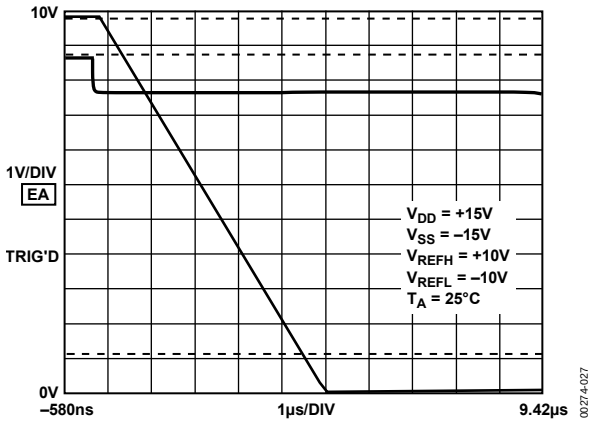

Figure 25. Negative Slew Rate

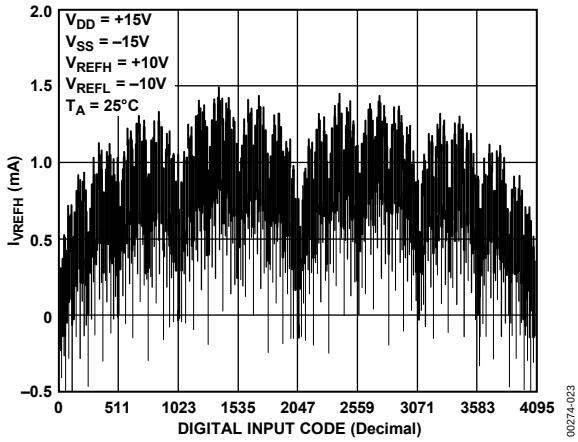

Figure 26. I_{VREFH} vs. Code

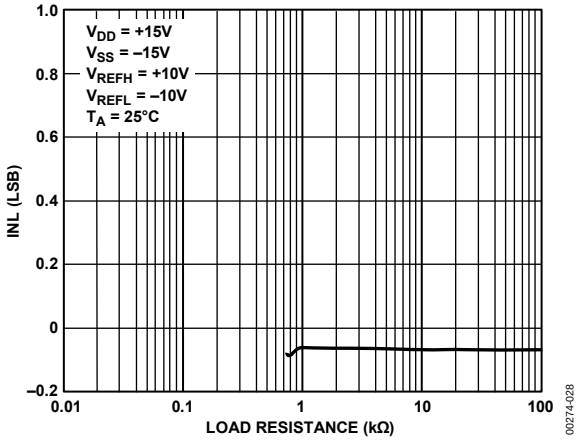

Figure 27. INL vs. Load Resistance

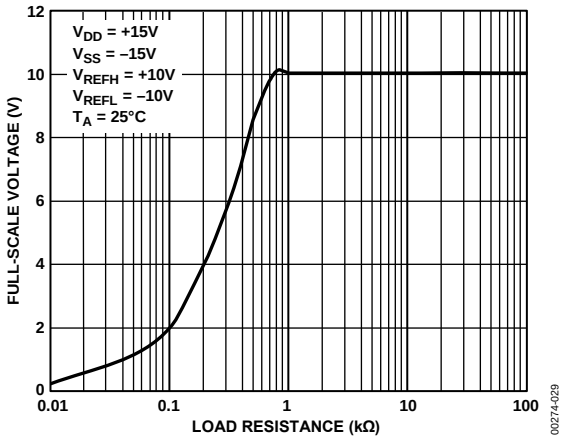

Figure 28. Output Swing vs. Load Resistance

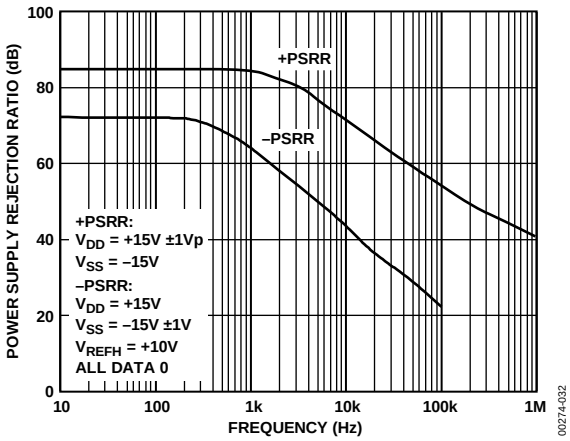

Figure 31. PSRR vs. Frequency

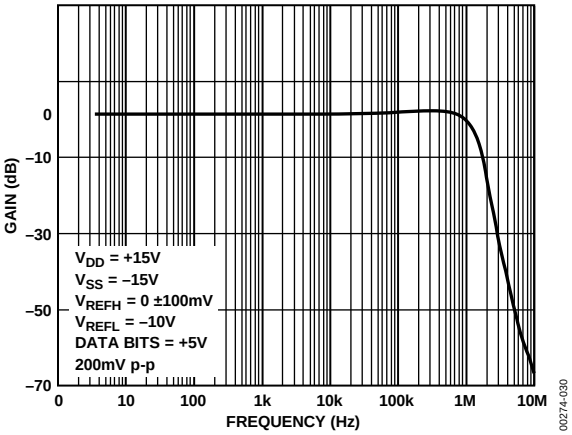

Figure 29. Small Signal Response

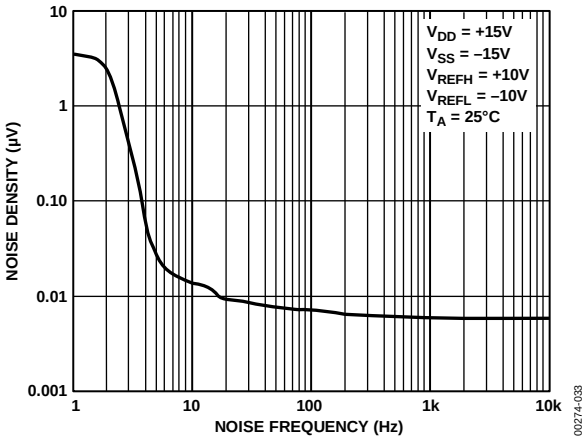

Figure 32. Noise Density vs. Noise Frequency

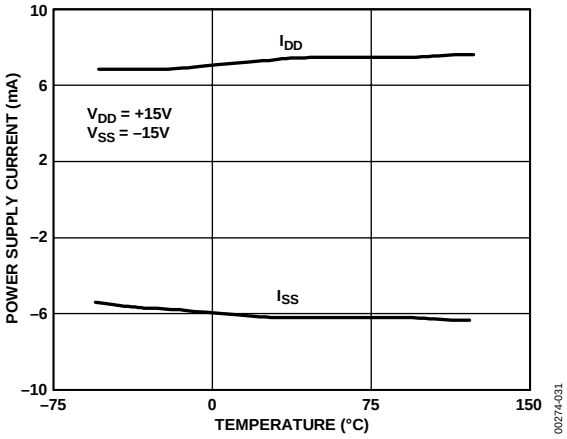

Figure 30. Power Supply Current vs. Temperature

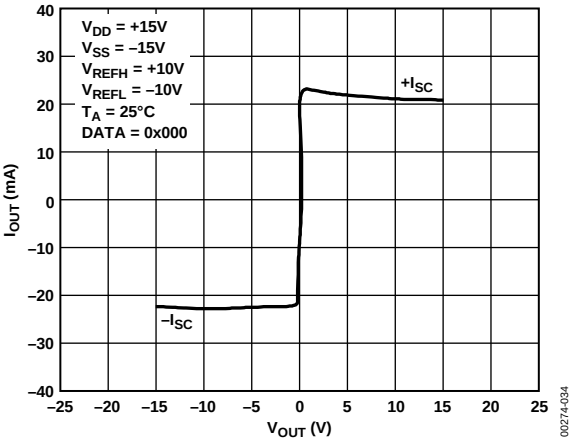

Figure 33. I_{OUT} vs. V_{OUT}

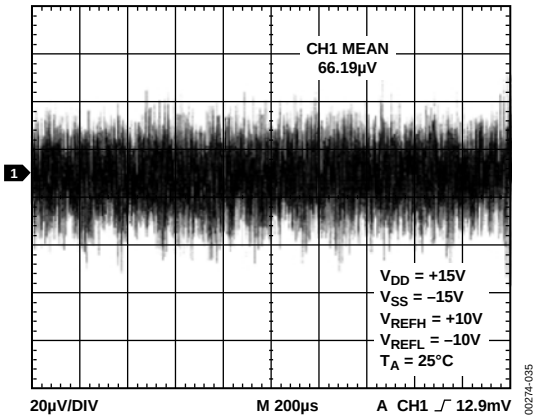

Figure 34. Broadband Noise

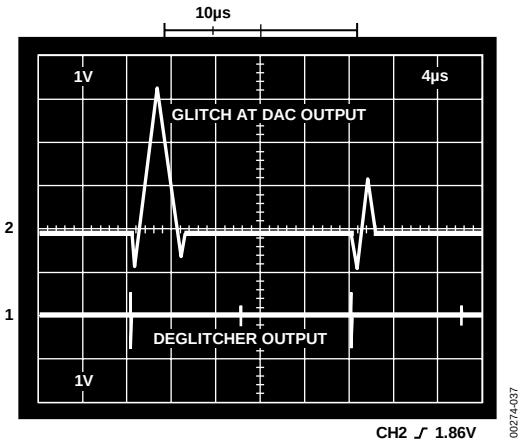

Figure 36. Glitch and Deglitched Results

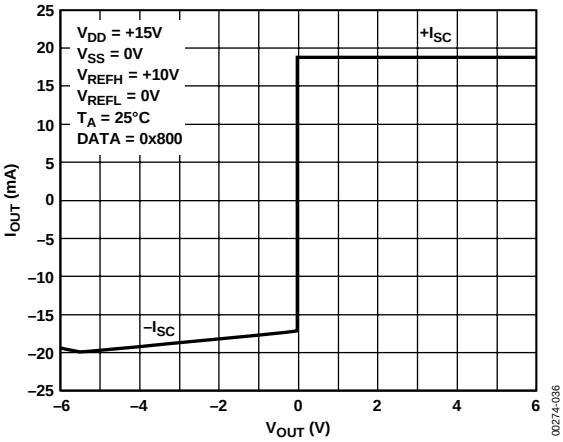

Figure 35. I_{OUT} vs. V_{OUT}

THEORY OF OPERATION

INTRODUCTION

The DAC8412/DAC8413 are quad, voltage output, 12-bit parallel input DACs featuring a 12-bit data bus with readback capability. The only differences between the DAC8412/DAC8413 are the reset functions. The DAC8412 resets to midscale (Code 0x800), and the DAC8413 resets to minimum scale (Code 0x000).

The ability to operate from a single 5 V supply is a unique feature of these DACs.

Operation of the DAC8412/DAC8413 can be viewed by dividing the system into three separate functional groups: the digital I/O and logic, the digital-to-analog converters, and the output amplifiers.

DACS

Each DAC is a voltage switched, high impedance (R = 50 kΩ), R-2R ladder configuration. Each 2R resistor is driven by a pair of switches that connect the resistor to either V_{REFH} or V_{REFL}.

GLITCH

Worst-case glitch occurs at the transition between Half-Scale Digital Code 1000 0000 0000 to half-scale minus 1 LSB, 0111 1111 1111. It can be measured at about 2 V µs (see Figure 36). For demanding applications such as waveform generation or precision instrumentation control, a deglitcher circuit can be implemented with a standard sample-and-hold circuit (see Figure 37). When $\overline{CS}$ is enabled by synchronizing the hold period to be longer than the glitch tradition, the output voltage can be smoothed with minimum disturbance. A quad sample-and-hold amplifier, SMP04, has been used to illustrate the deglitching result (see Figure 36).

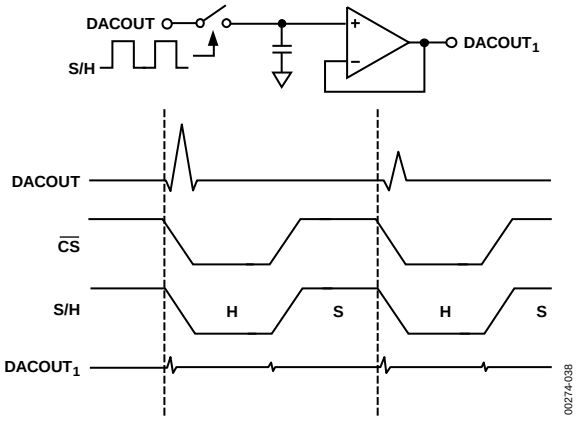

Figure 37. Data Output (Read Timing)

REFERENCE INPUTS

All four DACs share common reference high (V_{REFH}) and reference low (V_{REFL}) inputs. The voltages applied to these reference inputs set the output high and low voltage limits of all four of the DACs. Each reference input has voltage restrictions with respect to the other reference and to the power supplies. The V_{REFL} can be set at any voltage between V_{SS} and V_{REFH} − 2.5 V, and V_{REFH} can be set to any value between $+V_{DD}$ − 2.5 V and V_{REFL} + 2.5 V. Note that because of these restrictions, the DAC8412 references cannot be inverted (that is, V_{REFL} cannot be greater than V_{REFH}).

It is important to note that the DAC8412 V_{REFH} input both sinks and sources current. In addition, the input current of both V_{REFH} and V_{REFL} are code-dependent. Many references have limited current-sinking capability and must be buffered with an amplifier to drive V_{REFH}. The V_{REFL} has no such special requirements.

It is recommended that the reference inputs be bypassed with 0.2 µF capacitors when operating with ±10 V references. This limits the reference bandwidth.

DIGITAL I/O

See Table 6 for the digital control logic truth table. Digital I/O consists of a 12-bit bidirectional data bus, two registers select inputs, A0 and A1, a R/$\overline{W}$ input, a $\overline{RESET}$ input, a chip select ($\overline{CS}$), and a load DAC ($\overline{LDAC}$) input. Control of the DACs and bus direction is determined by these inputs as shown in Table 6. Digital data bits are labeled with the MSB defined as Data Bit 11 and the LSB as Data Bit 0. All digital pins are TTL/CMOS compatible.

See Figure 38 for a simplified I/O logic diagram. The register select inputs A0 and A1 select individual DAC registers A (Binary Code 00) through D (Binary Code 11). Decoding of the registers is enabled by the $\overline{CS}$ input. When $\overline{CS}$ is high, no decoding takes place, and neither the writing nor the reading of the input registers is enabled. The loading of the second bank of registers is controlled by the asynchronous $\overline{LDAC}$ input. By taking $\overline{LDAC}$ low while $\overline{CS}$ is enabled, all output registers can be updated simultaneously. Note that the t_{LDW} required pulse width for updating all DACs is a minimum of 170 ns.

The R/$\overline{W}$ input, when enabled by $\overline{CS}$, controls the writing to and reading from the input register.

CODING

Both DAC8412/DAC8413 use binary coding. The output voltage can be calculated by

$$V_{OUT} = V_{REFL} + \frac{(V_{REFH} - V_{REFL}) \times N}{4096}$$

where *N* is the digital code in decimal.

$\overline{\text{RESET}}$

The $\overline{\text{RESET}}$ function can be used either at power-up or at any time during DAC operation. The $\overline{\text{RESET}}$ function is independent of $\overline{\text{CS}}$. This pin is active low and sets the DAC output registers to either center code for the DAC8412, or zero code for the DAC8413. The reset-to-center code is most useful when the DAC is configured for bipolar references and an output of 0 V after reset is desired.

SUPPLIES

Supplies required are V_{SS}, V_{DD}, and V_{LOGIC}. The V_{SS} supply can be set between −15 V and 0 V. V_{DD} is the positive supply; its operating range is between 5 V and 15 V.

V_{LOGIC} is the digital output supply voltage for the readback function. It is normally connected to +5 V. This pin is a logic reference input only. It does not supply current to the device. If the readback function is not being used, V_{LOGIC} can be left open-circuit. While V_{LOGIC} does not supply current to the DAC8412, it does supply currents to the digital outputs when readback is used.

AMPLIFIERS

Unlike many voltage output DACs, the DAC8412 features buffered voltage outputs. Each output is capable of both sourcing and sinking 5 mA at ±10 V, eliminating the need for external amplifiers when driving 500 pF or smaller capacitive load in most applications. These amplifiers are short-circuit protected.

Table 6. DAC8412/DAC8413 Logic Table

A1	A0	R/$\overline{\text{W}}$	$\overline{\text{CS}}$	$\overline{\text{RS}}$	$\overline{\text{LDAC}}$	Input Register	Output Register	Mode	DAC
L	L	L	L	H	L	Write	Write	Transparent	A
L	H	L	L	H	L	Write	Write	Transparent	B
H	L	L	L	H	L	Write	Write	Transparent	C
H	H	L	L	H	L	Write	Write	Transparent	D
L	L	L	L	H	H	Write	Hold	Write input	A
L	H	L	L	H	H	Write	Hold	Write input	B
H	L	L	L	H	H	Write	Hold	Write input	C
H	H	L	L	H	H	Write	Hold	Write input	D
L	L	H	L	H	H	Read	Hold	Read input	A
L	H	H	L	H	H	Read	Hold	Read input	B
H	L	H	L	H	H	Read	Hold	Read input	C
H	H	H	L	H	H	Read	Hold	Read input	D
X	X	X	H	H	L	Hold	Update all output registers		All
X	X	X	H	H	H	Hold	Hold	Hold	All
X	X	X	X	L	X	All registers reset to midscale/zero-scale[1]			All
X	X	X	H	↑	X	All registers latched to midscale/zero-scale[1]			All

[1] DAC8412 resets to midscale, and DAC8413 resets to zero scale. L = logic low; H = logic high; X = don't care. Input and output registers are transparent when asserted.

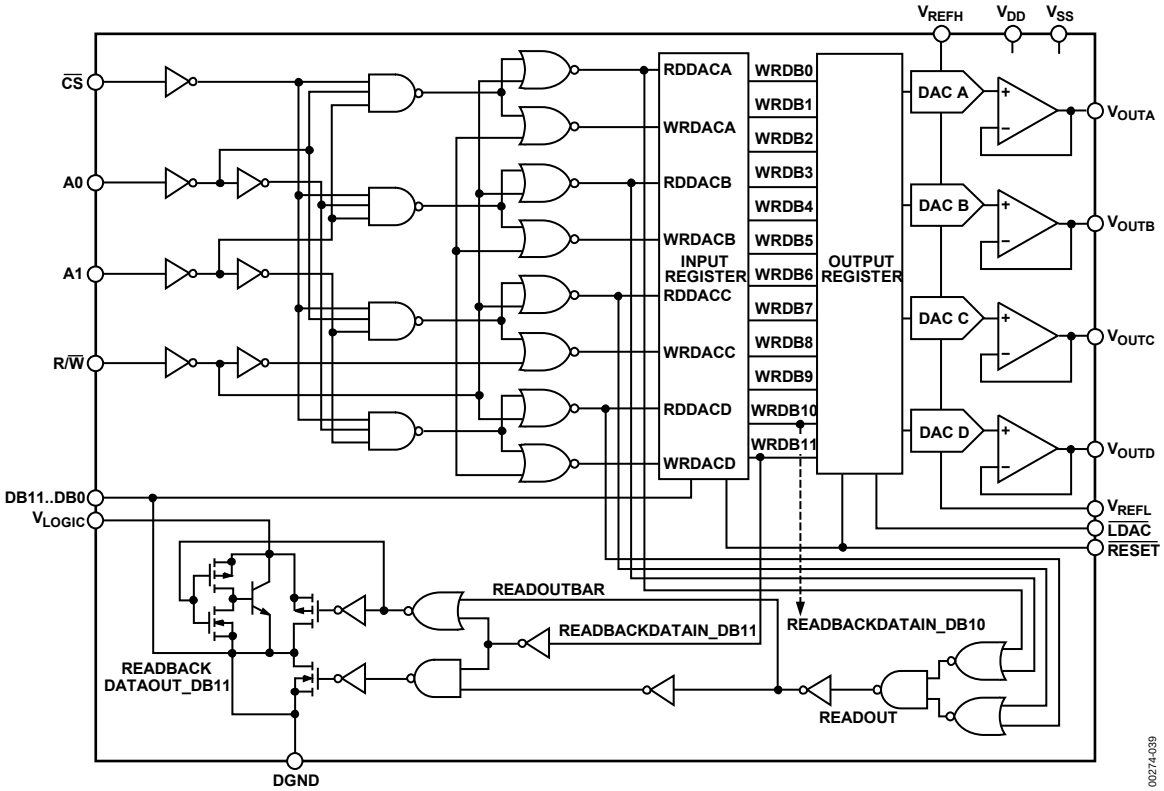

Figure 38. Simplified I/O Logic Diagram

Careful attention to grounding is important for accurate operation of the DAC8412. This is not because the DAC8412 is more sensitive than other 12-bit DACs, but because with four outputs and two references, there is greater potential for ground loops. Because the DAC8412 has no analog ground, the ground must be specified with respect to the reference.

REFERENCE CONFIGURATIONS

Output voltage ranges can be configured as either unipolar or bipolar, and within these choices, a wide variety of options exists. The unipolar configuration can be either positive or negative voltage output, and the bipolar configuration can be either symmetrical or nonsymmetrical.

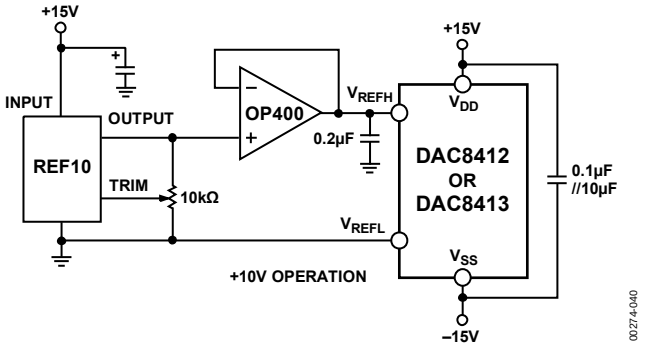

Figure 39. Unipolar +10 V Operation

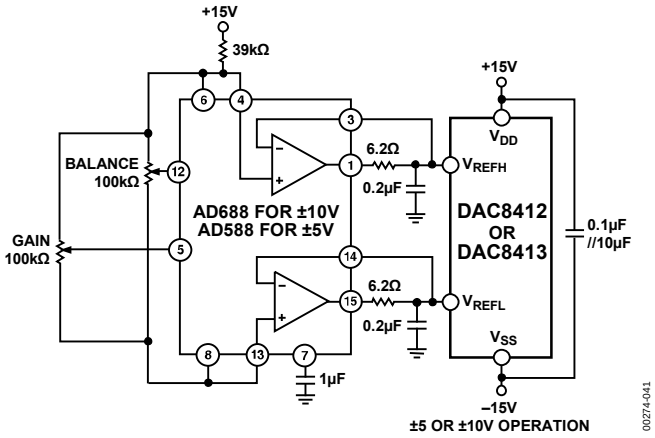

Figure 40. Symmetrical Bipolar Operation

Figure 40 (symmetrical bipolar operation) shows the DAC8412 configured for ±10 V operation. See the AD688 data sheet for a full explanation of reference operation. Adjustments may not be required for many applications since the AD688 is a very high accuracy reference. However, if additional adjustments are required, adjust the DAC8412 full scale first. Begin by loading the digital full-scale code (0xFFF), and then adjust the gain adjust potentiometer to attain a DAC output voltage of 9.9976 V. Then, adjust the balance adjust to set the center-scale output voltage to 0.000 V.

The 0.2 µF bypass capacitors shown at the reference inputs in Figure 40 should be used whenever ±10 V references are used. Applications with single references or references to ±5 V may not require the 0.2 µF bypassing. The 6.2 Ω resistor in series with the output of the reference amplifier keeps the amplifier from oscillating with the capacitive load. This 6.2 Ω resistor has been found to be large enough to stabilize this circuit. Larger resistor values are acceptable, provided that the drop across the resistor does not exceed V_{BE}. Assuming a minimum V_{BE} of 0.6 V and a maximum current of 2.75 mA, then the resistor should be under 200 Ω for the loading of a single DAC8412.

Using two separate references is not recommended. Having two references can cause different drifts with time and temperature; whereas with a single reference, most drifts track.

Unipolar positive full-scale operation can usually be set with a reference with the correct output voltage. This is preferable to using a reference and dividing down to the required value. For a 10 V full-scale output, the circuit can be configured as shown in Figure 41. In this configuration, the full-scale value is set first by adjusting the 10 kΩ resistor for a full-scale output of 9.9976 V.

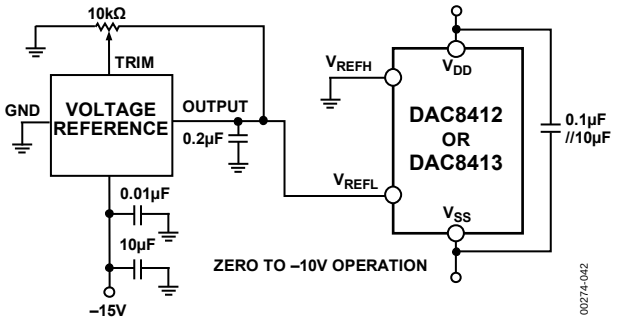

Figure 41. Unipolar –10 V Operation

Figure 41 shows the DAC8412 configured for –10 V to 0 V operation. A –10 V full-scale output voltage reference is connected directly to V_{REFL} for the reference voltage.

SINGLE +5 V SUPPLY OPERATION

For operation with a 5 V supply, the reference voltage should be set between 1.0 V and 2.5 V for optimum linearity. Figure 42 shows a REF43 used to supply a 2.5 V reference voltage. The headroom of the reference and DAC are both sufficient to support a 5 V supply with ±5% tolerance. V_{DD} and V_{LOGIC} should be connected to the same supply. Separate bypassing to each pin should also be used.

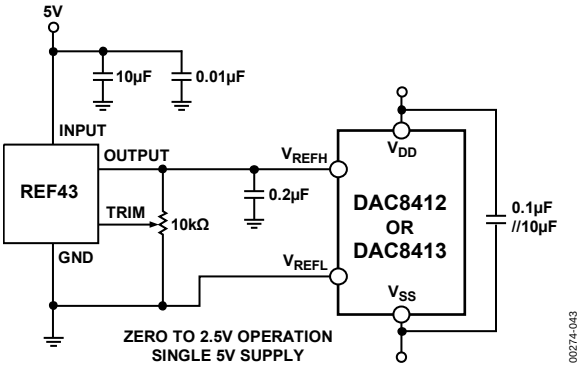

Figure 42. +5 V Single-Supply Operation

OUTLINE DIMENSIONS

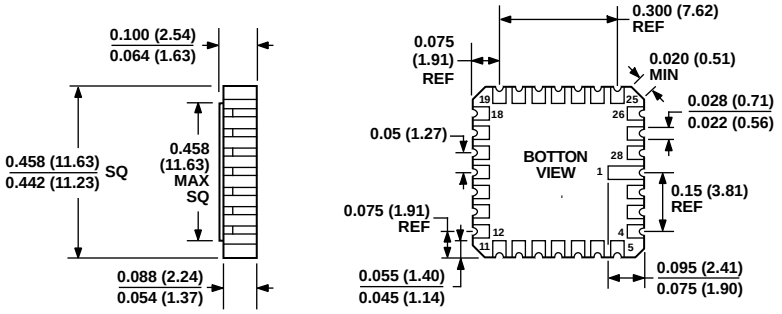

CONTROLLING DIMENSIONS ARE IN INCHES; MILLIMETER DIMENSIONS (IN PARENTHESES) ARE ROUNDED-OFF INCH EQUIVALENTS FOR REFERENCE ONLY AND ARE NOT APPROPRIATE FOR USE IN DESIGN

022106-A

Figure 43. 28-Terminal Ceramic Leadless Chip Carrier [LCC]
(E-28-1)
Dimensions shown in inches and (millimeters)

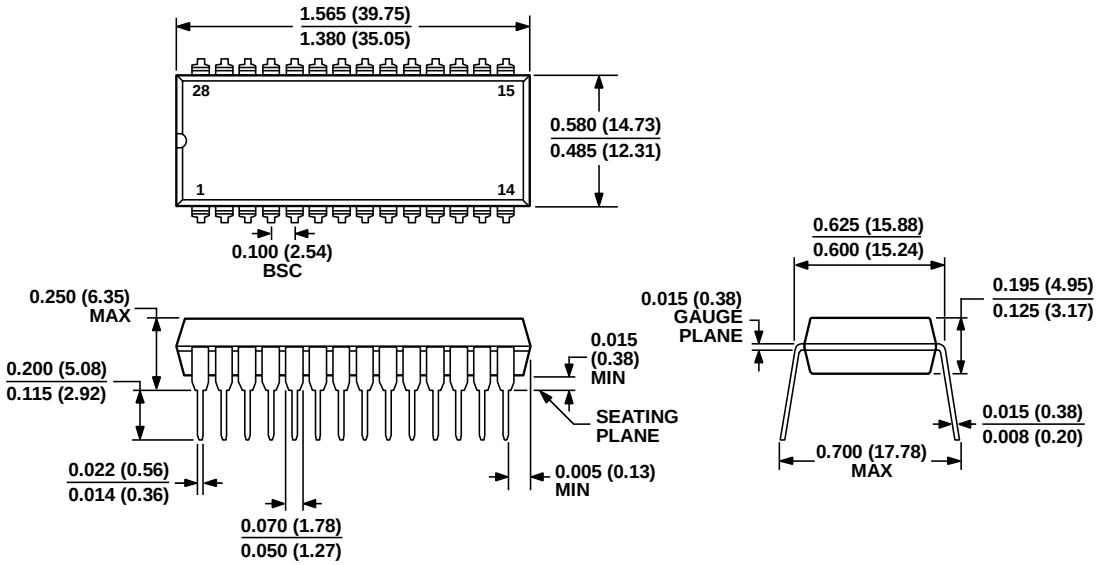

COMPLIANT TO JEDEC STANDARDS MS-011

CONTROLLING DIMENSIONS ARE IN INCHES; MILLIMETER DIMENSIONS (IN PARENTHESES) ARE ROUNDED-OFF INCH EQUIVALENTS FOR REFERENCE ONLY AND ARE NOT APPROPRIATE FOR USE IN DESIGN. CORNER LEADS MAY BE CONFIGURED AS WHOLE LEADS.

071006-A

Figure 44. 28-Lead Plastic Dual In-Line Package [PDIP]
Wide Body
(N-28-2)
Dimensions shown in inches and (millimeters)

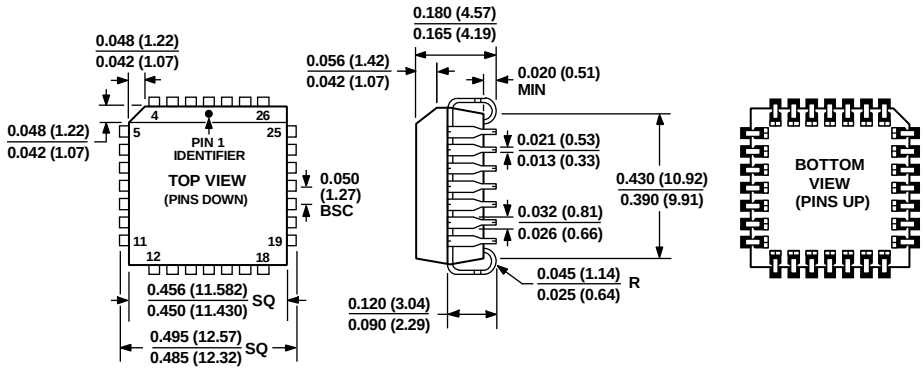

COMPLIANT TO JEDEC STANDARDS MO-047-AB
CONTROLLING DIMENSIONS ARE IN INCHES; MILLIMETER DIMENSIONS (IN PARENTHESES) ARE ROUNDED-OFF INCH EQUIVALENTS FOR REFERENCE ONLY AND ARE NOT APPROPRIATE FOR USE IN DESIGN.

042508-A

Figure 45. 28-Lead Plastic Leaded Chip Carrier [PLCC]
(P-28)
Dimensions shown in inches and (millimeters)

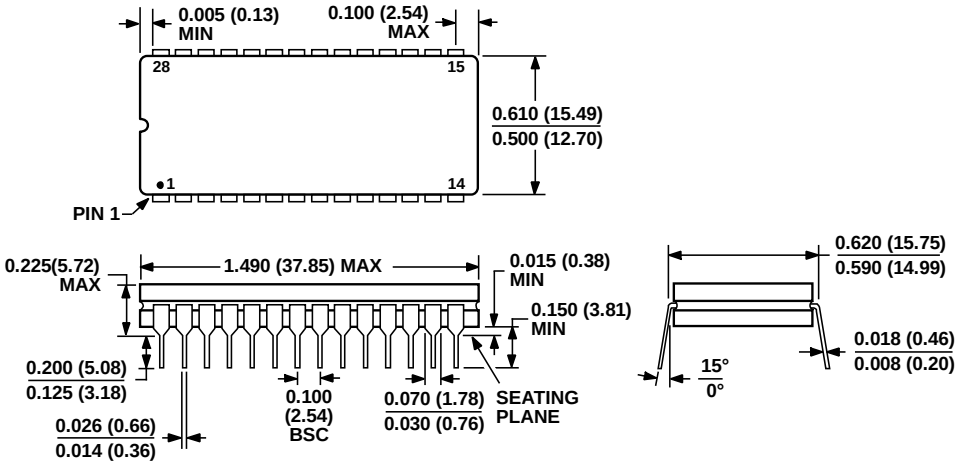

CONTROLLING DIMENSIONS ARE IN INCHES; MILLIMETER DIMENSIONS (IN PARENTHESES) ARE ROUNDED-OFF INCH EQUIVALENTS FOR REFERENCE ONLY AND ARE NOT APPROPRIATE FOR USE IN DESIGN.

030106-A

Figure 46. 28-Lead Ceramic Dual In-Line Package [CERDIP]
(Q-28-2)
Dimensions shown in inches and (millimeters)

ORDERING GUIDE

Model[1]	Notes	Temperature Range	INL	Package Description	Package Option
DAC8412AT/883C		−55°C to +125°C	±0.75	28-Lead Ceramic Dual In-Line Package [CERDIP]	Q-28-2
DAC8412BT/883C		−55°C to +125°C	±1.5	28-Lead Ceramic Dual In-Line Package [CERDIP]	Q-28-2
DAC8412BTC/883C		−55°C to +125°C	±1.5	28-Terminal Ceramic Leadless Chip Carrier [LCC]	E-28-1
DAC8412EP	2	−40°C to +85°C	±0.5	28-Lead Plastic Dual In-Line Package [PDIP]	N-28-2
DAC8412EPZ	2	−40°C to +85°C	±0.5	28-Lead Plastic Dual In-Line Package [PDIP]	N-28-2
DAC8412FP	2	−40°C to +85°C	±1	28-Lead Plastic Dual In-Line Package [PDIP]	N-28-2
DAC8412FPC	2	−40°C to +85°C	±1	28-Lead Plastic Leaded Chip Carrier [PLCC]	P-28
DAC8412FPC-REEL	2	−40°C to +85°C	±1	28-Lead Plastic Leaded Chip Carrier [PLCC]	P-28
DAC8412FPCZ	2	−40°C to +85°C	±1	28-Lead Plastic Leaded Chip Carrier [PLCC]	P-28
DAC8412FPCZ-REEL	2	−40°C to +85°C	±1	28-Lead Plastic Leaded Chip Carrier [PLCC]	P-28
DAC8412FPZ	2	−40°C to +85°C	±1	28-Lead Plastic Dual In-Line Package [PDIP]	N-28-2
DAC8413AT/883C		−55°C to +125°C	±0.75	28-Lead Ceramic Dual In-Line Package [CERDIP]	Q-28-2
DAC8413BT/883C		−55°C to +125°C	±1.5	28-Lead Ceramic Dual In-Line Package [CERDIP]	Q-28-2
DAC8413BTC/883C		−55°C to +125°C	±1.5	28-Terminal Ceramic Leadless Chip Carrier [LCC]	E-28-1
DAC8413EP	2	−40°C to +85°C	±0.5	28-Lead Plastic Dual In-Line Package [PDIP]	N-28-2
DAC8413EPZ	2	−40°C to +85°C	±0.5	28-Lead Plastic Dual In-Line Package [PDIP]	N-28-2
DAC8413FP	2	−40°C to +85°C	±1	28-Lead Plastic Dual In-Line Package [PDIP]	N-28-2
DAC8413FPC	2	−40°C to +85°C	±1	28-Lead Plastic Leaded Chip Carrier [PLCC]	P-28
DAC8413FPC-REEL	2	−40°C to +85°C	±1	28-Lead Plastic Leaded Chip Carrier [PLCC]	P-28
DAC8413FPCZ	2	−40°C to +85°C	±1	28-Lead Plastic Leaded Chip Carrier [PLCC]	P-28
DAC8413FPC-REEL	2	−40°C to +85°C	±1	28-Lead Plastic Dual In-Line Package [PDIP]	N-28-2
DAC8413FPZ	2	−40°C to +85°C	±1	28-Lead Plastic Dual In-Line Package [PDIP]	N-28-2

[1] Z = RoHS Compliant Part.
[2] If burn-in is required, these models are available in CERDIP. Contact sales.

©2000–2013 Analog Devices, Inc. All rights reserved. Trademarks and registered trademarks are the property of their respective owners.
D00274-0-4/13(G)