REV.	DATE	DESCRIPTION
NC	10/09/00	INITIAL RELEASE

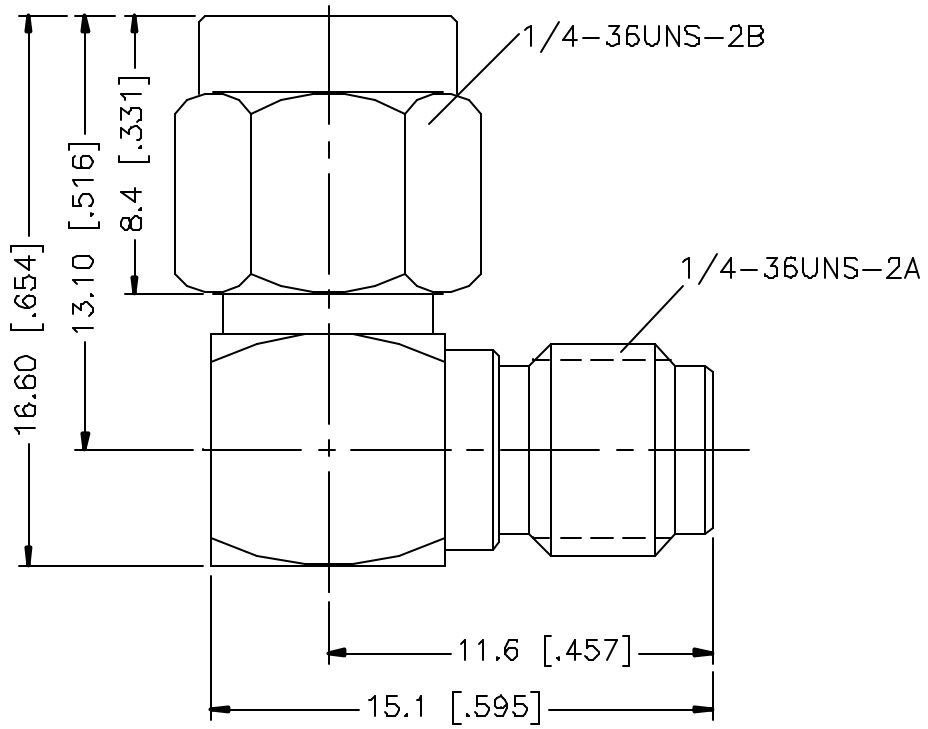

	DESCRIPTION	MATERIAL	FINISH
1	BODY	BRASS	GOLD
2	INSULATOR	TEFLON	NATURAL
3	CONTACT PIN	BER. COPPER	GOLD
4			
5			
6			
7			
8			

UNLESS OTHERWISE SPECIFIED DIMENSIONS ARE IN MILLIMETERS

DIMENSIONS IN [ ] ARE IN INCHES FOR CUSTOMER REFERANCE ONLY

UNLESS OTHERWISE SPECIFIED TOLERANCES FOR MILLIMETERS ARE:

0.5-6 = ± 0.2
6-30 = ± 0.4
30-120 = ± 0.6
120-315 = ± 1
315-1000 = ± 1.5
1000-2000 = ± 2.4

DO NOT SCALE DRAWING

APPROVALS		DATE
DRAWN	G.R.S.	10/09/00
CHECKED		
ISSUED		

Connector Corporation

TITLE
SMA PLUG TO SMA REVERSE POLARIZED JACK ADAPTER

SIZE	FSCM NO.	DWG. NO.	REV.
A	99001	132172RP.DWG	NC

SCALE	NA	PART NO.	132172RP	SHEET	1 OF 1