ROHS COMPLIANT

PRODUCT DATA DRAWING

REVISION HISTORY			
REV	DESCRIPTION	DATE	APPROVED
01	PRELIMINARY	05/15	STW

MATERIAL:

BODY, CAP, SLEEVE & COUPLING NUT:	STAINLESS STEEL PER AMS-5640, ALLOY UNS S30300, TYPE 1
LOCK RING:	BERYLLIUM COPPER PER ASTM B196, ALLOY No. UNS C17300, TD04
SLEEVE (CHIP) & CONTACTS:	BRASS PER ASTM B16, ALLOY UNS No. C36000
BELLOWS SPRING:	ELECTRO DEPOSITED NICKEL: GOLD PLATED
INSULATOR:	KEL-F PER ASTM D1430
GASKET:	SILICONE RUBBER PER A-A-59588, CLASS 2B, GRADE 50/60
RESISTOR ELEMENT:	ALUMINUM NITRIDE SUBSTRATE WITH TANTALUM NITRIDE RESISTOR: GOLD PLATED TERMINATIONS

FINISH:

BODY, CAP, COUPLING NUT & SLEEVE (BODY):	PASSIVATED PER AMS-2700, TYPE II.
CONTACTS:	GOLD PER ASTM B488, TYPE I, CODE C, CLASS .5, OVER NICKEL PER AMS-QQ-N-290, CLASS 1, .00005" MIN.
SLEEVE (CHIP):	GOLD PER ASTM B488, TYPE II, CODE C, CLASS 1.52, OVER NICKEL PER AMS-QQ-N-290, CLASS 1, .00010" MIN

PERFORMANCE:

IMPEDANCE:	50 OHMS
FREQ. RANGE:	DC TO 50.0 GHz
VSWR:	1.30:1 DC TO 50.0 GHz
OPERATING TEMP.:	-65°C TO +125°C
AVG. POWER:	1 WATT (POWER INPUT DERATED LINEARLY FROM 25°C TO 10% OF AVERAGE AT 125°C)
PEAK POWER:	100 WATTS (PEAK POWER FOR A DUTY CYCLE OF 5X10-4 MAXIMUM PULSE DURATION OF 5 MICROSECONDS)
ENGAGEMENT/ DISENGAGEMENT:	2 IN-LBS

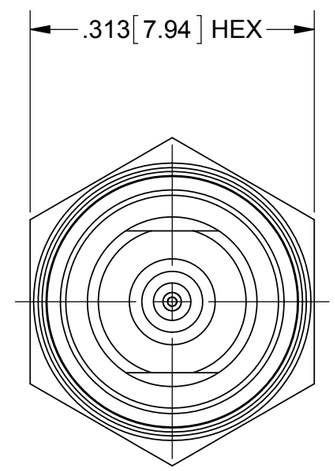

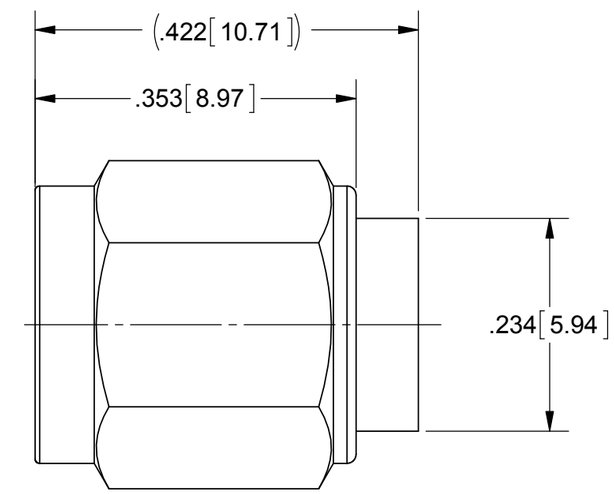

MATERIAL: SEE NOTES	DIMENSIONS ARE IN INCHES TOLERANCES: FRACTIONAL: ±1/64 ANGULAR: X° ±1°0' X°X' ±15' DECIMAL: .X ±.030 .XX ±.010 .XXX ±.005 INTERPRET DIMENSIONS AND TOLERANCES PER ASME Y14.5M - 1994	UNLESS OTHERWISE SPECIFIED 1) ALL DIMENSIONS ARE IN INCHES [MILLIMETERS] 2) ALL DIMENSIONS ARE AFTER PLATING. 3) BREAK CORNERS & EDGES .005 R. MAX. 4) CHAM. 1ST & LAST THREADS. 5) SURFACE ROUGHNESS 63 MIL-STD-10. 6) DIA.'S ON COMMON CENTERS TO BE CONCENTRIC WITHIN .005 T.I.R. 7) REMOVE ALL BURRS	**SV Microwave, Inc.** 2400 Centrepark West Drive, Suite 100 West Palm Beach, FL 33409	
FINISH: SEE NOTES			TITLE: 2.4mm, 50 OHM PLUG TERMINATION DC TO 50 GHz	
SURFACE AREA: N/A				
PROPRIETARY THE INFORMATION CONTAINED IN THIS DRAWING IS THE SOLE PROPERTY OF SV MICROWAVE, INC. ANY REPRODUCTION IN PART OR AS A WHOLE WITHOUT THE WRITTEN PERMISSION OF SV MICROWAVE, INC IS PROHIBITED.	THIRD ANGLE PROJECTION	DRAWN: BNK 05/26/15	SIZE B / CAGE CODE 95077	DWG. NO. SF8016-6404
		CHECKED: STW 05/26/15		
		APPROVED: STW 05/26/15	SCALE: 6:1	SHEET 1 OF 1