UNCONTROLLED DOCUMENT

PART NUMBER	SSF-LXH409-59IGW	REV.	B
DATE	E.C.N. NUMBER AND REVISION COMMENTS		REV.
10.06.00	E.C.N. #10669.		A
02.23.12	E.C.N. #10BRDR. & REDRAWN.		B

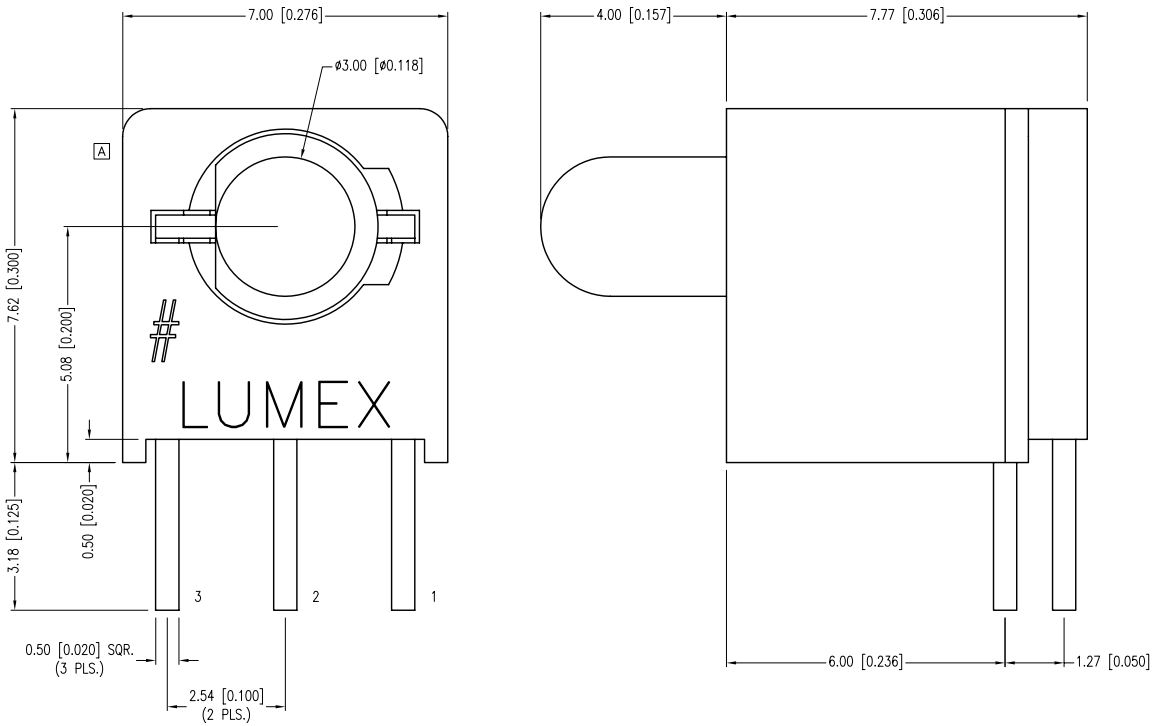

ELECTRO-OPTICAL CHARACTERISTICS Ta=25°C If=20mA

PARAMETER	MIN	TYP	MAX	UNITS	TEST COND
PEAK WAVELENGTH	(R/G)	635/565		nm	
FORWARD VOLTAGE	(R/G)	2.0/2.2	2.5/2.6	Vf	
REVERSE VOLTAGE	5.0			Vr	Ir=100µA
AXIAL INTENSITY		25		mcd	If=20mA
VIEWING ANGLE		60		2x theta	
EMITTED COLOR:	RED/GREEN				
LENS FINISH:	MILKY WHITE DIFFUSED				

LIMITS OF SAFE OPERATION AT 25°C

PARAMETER	MAX	UNITS
PEAK FORWARD CURRENT*	150	mA
STEADY CURRENT (R/G)	30/25	mA
POWER DISSIPATION	105	mW
DERATE FROM 25°C	-1.6	mW/°C
OPERATING TEMP.	-40 TO +85	°C
STORAGE TEMP.	-40 TO +85	°C
SOLDERING TEMP.	+260	°C
2.0mm FROM BODY	3	SEC.

* t<10µS

NOTES:

1. SSH-LXH409, BLACK HOLDER.
2. SSL-LX3059IGW, BICOLOR LED.

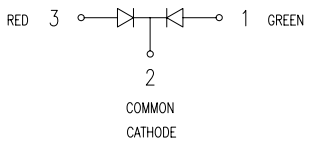

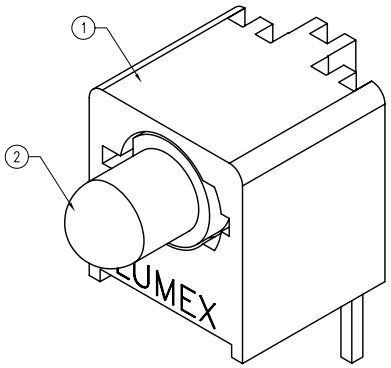

*UNLESS OTHERWISE SPECIFIED TOLERANCES PER DECIMAL PRECISION ARE: X=±1 (±0.039), X.X=±0.5 (±0.020), X.XX=±0.25 (±0.010), X.XXX=±0.127 (±0.005). LEAD SIZE=±0.05 (±0.002), LEAD LENGTH=±0.75 (±0.030). MIN= +DECIMAL PRECISION -0.00 MAX.= +0.00 -DECIMAL PRECISION

UNCONTROLLED DOCUMENT

LUMEX®
Creating LED and LCD Solutions Together™
290 E. HELEN ROAD
PALATINE, IL 60067-6976
PHONE: +1.847.359.2790
FAX: +1.847.359.6538
WEB: WWW.LUMEX.COM

T-4mm RIGHT ANGLE INDICATOR, 3 LEADS, COMMON CATHODE, RED/GREEN BICOLOR, MILKY WHITE DIFFUSED LENS.

THE SPECIFICATIONS MAY CHANGE AT ANY TIME WITHOUT NOTICE DUE TO NEW MATERIALS OR PRODUCT IMPROVEMENT.

CONFIDENTIAL INFORMATION
THE INFORMATION CONTAINED IN THIS DOCUMENT IS THE PROPERTY OF LUMEX INC. EXCEPT AS SPECIFICALLY AUTHORIZED IN WRITING BY LUMEX INC., THE HOLDER OF THIS DOCUMENT SHALL KEEP ALL INFORMATION CONTAINED HEREIN CONFIDENTIAL AND SHALL PROTECT SAME IN WHOLE OR IN PART FROM DISCLOSURE AND DISSEMINATION TO ALL THIRD PARTIES.

DATE:	02.23.12	DRAWN BY:	AB
PAGE:	1 OF 1	CHKD BY:	SS
SCALE:	NTS	APRVD BY:	SS
UNIT:	mm [INCH]	Pb	