TDK

June 2015

MLCC with Dipped Radial Lead

(Halogen-free, Commercial Grade)

FG Series

Type:

Lead pitch 5.0 mm
FG28 [4.0x5.5mm]
FG24 [4.5x5.5mm]
FG26 [5.5x6.0mm]
FG20 [5.5x7.0mm]
FG22 [7.5x8.5mm]

Lead pitch 2.5 mm
FG18 [4.0x5.5mm]
FG14 [4.5x5.5mm]
FG16 [5.5x6.0mm]
FG11 [5.5x7.0mm]

REMINDERS FOR USING THESE PRODUCTS

Before using these products, be sure to request the delivery specifications.

SAFETY REMINDERS

Please pay sufficient attention to the warnings for safe designing when using these products.

⚠ REMINDERS

- Do not use or store in locations where there are conditions such as gas corrosion (salt, acid, alkali, etc.).
- Before soldering, be sure to preheat components.
  The preheating temperature should be set so that the temperature difference between the solder temperature and product temperature does not exceed 150°C.
- Soldering corrections after mounting should be within the range of the conditions determined in the specifications.
  If overheated, a short circuit, performance deterioration, or lifespan shortening may occur.
- Self heating (temperature increase) occurs when the power is turned ON, so the tolerance should be sufficient for the set thermal design.
- Do not use for a purpose outside of the contents regulated in the delivery specifications.
- The products listed on this catalog are intended for use in general electronic equipment (AV equipment, telecommunications equipment, home appliances, amusement equipment, computer equipment, personal equipment, office equipment, measurement equipment, industrial robots) under a normal operation and use condition.
  The products are not designed or warranted to meet the requirements of the applications listed below, whose performance and/or quality require a more stringent level of safety or reliability, or whose FGilure, malfunction or trouble could cause serious damage to society, person or property.
  If you intend to use the products in the applications listed below or if you have special requirements exceeding the range or conditions set forth in the each catalog, please contact us.

(1) Aerospace/Aviation equipment
(2) Transportation equipment (cars, electric trains, ships, etc.)
(3) Medical equipment
(4) Power-generation control equipment
(5) Atomic energy-related equipment
(6) Seabed equipment
(7) Transportation control equipment
(8) Public information-processing equipment
(9) Military equipment
(10) Electric heating apparatus, burning equipment
(11) Disaster prevention/crime prevention equipment
(12) Safety equipment
(13) Other applications that are not considered general-purpose applications

When designing your equipment even for general-purpose applications, you are kindly requested to take into consideration securing protection circuit/device or providing backup circuits in your equipment.

MLCC with Dipped Radial Lead

Halogen-free, Commercial Grade

Product compatible with RoHS directive
Halogen-free

Overview of the FG Series

FEATURES

- A complete lineup with a rated voltage of 6.3V to 630V.
- Compatible with a wide capacitance range of 1pF to 100μF.

APPLICATION

- Noise reduction measures for various motors
- Bypass capacitors such as for switching power sources, smoothing capacitors, etc.
- Snubber circuits
- PFC input filters

PART NUMBER CONSTRUCTION

FG	2	8	C0G	1H	010	C	□□□	□
Series name	Lead pitch (mm)	LxWxT Dimensions (mm)	Capacitance temperature characteristics	Rated voltage (V)	Nominal capacitance (pF)	Capacitance tolerance*	Internal code	Packaging Style**

Lead pitch (mm)	
1	2.5
2	5.0

LxWxT Dimensions (mm)	
8	4.0x5.5x2.5
4	4.5x5.5x3.0
6	5.5x6.0x3.5
0	5.5x7.0x4.0
1	5.5x7.0x4.0
2	7.5x8.5x4.5

Capacitance temperature characteristics	
C0G	0±30ppm/°C
X5R	±15%
X7R	±15%
X7S	±22%
X7T	+22, –33%

Rated voltage (V)	
0J	6.3
1A	10
1C	16
1E	25
1H	50
2A	100
2E	250
2W	450
2J	630

Nominal capacitance (pF)	
010	1
100	10
101	100
102	1,000

Capacitance tolerance*	
C	±0.25pF
D	±0.5pF
J	±5%
K	±10%
M	±20%

Packaging Style**	
0	Bulk
6	Taping

* Applicable capacitance range: Max. 10 pF for C and D, over 10 pF for J, K, and M.
** Applied to the TDK's standard specification products.

OPERATING TEMPERATURE RANGE

Capacitance temperature characteristics	Temperature range	
	Operating temperature (°C)	Storage temperature* (°C)
C0G, X7R, X7S, X7T	–55 to +125	–55 to +125
X5R	–55 to +85	–55 to +85

* The Storage temperature range is for after the circuit board is mounted.

- RoHS Directive Compliant Product: See the following for more details related to RoHS Directive compliant products. http://product.tdk.com/en/environment/rohs/
- Halogen-free: Indicates that Cl content is less than 900ppm, Br content is less than 900ppm, and that the total Cl and Br content is less than 1500ppm.

⚠ Please be sure to request delivery specifications that provide further details on the features and specifications of the products for proper and safe use.
Please note that the contents may change without any prior notice due to reasons such as upgrading.

Overview of the FG Series

PACKAGE QUANTITY

Type	Package quantity	
	Taping (pieces / box)	Bulk (pieces / bag)
FG28	2000	500
FG24	2000	500
FG26	2000	500
FG20	1500	500
FG22	1000	500
FG18	2000	500
FG14	2000	500
FG16	2000	500
FG11	1500	500

⚠ Please be sure to request delivery specifications that provide further details on the features and specifications of the products for proper and safe use.
Please note that the contents may change without any prior notice due to reasons such as upgrading.

Overview of the FG Series

RECOMMENDED FLOW PROFILE

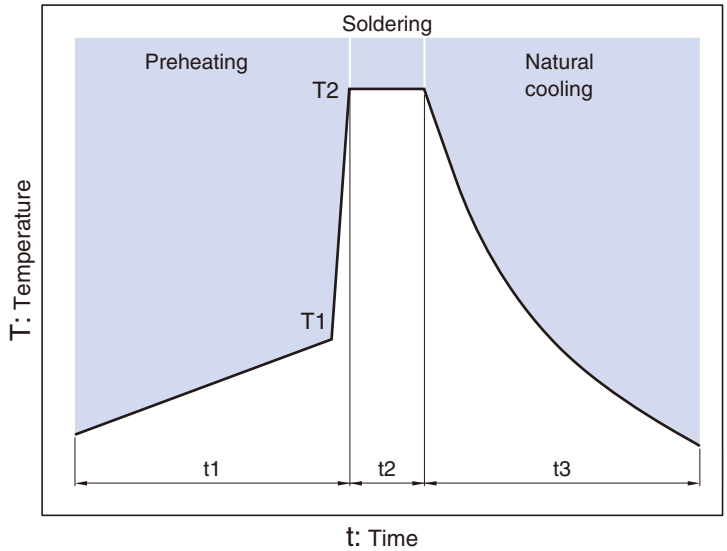

Preheating		Peak		Natural cooling
Temp.	**Time**	**Temp.**	**Time**	**Time**
T1	**t1**	**T2**	**t2**	**t3**
110°C min.	Over 60s.	260°C	Within 5s.	Over 60s.

⚠ Please be sure to request delivery specifications that provide further details on the features and specifications of the products for proper and safe use.
Please note that the contents may change without any prior notice due to reasons such as upgrading.

FG28 Type

SHAPE & DIMENSIONS

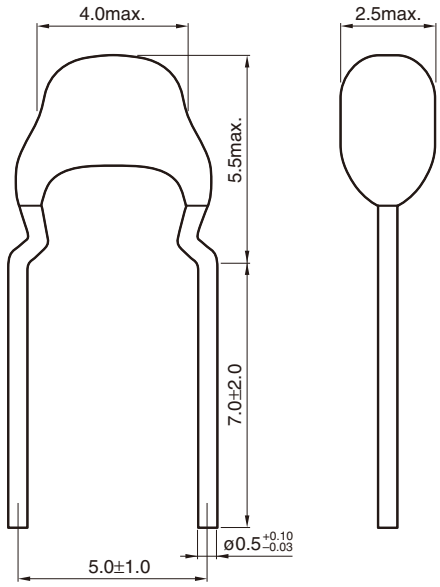

Dimensions in mm

⚠ Please be sure to request delivery specifications that provide further details on the features and specifications of the products for proper and safe use.
Please note that the contents may change without any prior notice due to reasons such as upgrading.

FG28 Type

■ELECTRICAL CHARACTERISTICS

□CHARACTERISTICS SPECIFICATION TABLE

CLASS 1 (TEMPERATURE COMPENSATION)

Temperature characteristics	Capacitance	Tolerance	Rated voltage Edc (V)	Part No.*
C0G	1.0pF	±0.25pF	50	FG28C0G1H010CNT0□**
C0G	1.5pF	±0.25pF	50	FG28C0G1H1R5CNT0□
C0G	2.0pF	±0.25pF	50	FG28C0G1H020CNT0□
C0G	2.2pF	±0.25pF	50	FG28C0G1H2R2CNT0□
C0G	3.0pF	±0.25pF	50	FG28C0G1H030CNT0□
C0G	3.3pF	±0.25pF	50	FG28C0G1H3R3CNT0□
C0G	4.0pF	±0.25pF	50	FG28C0G1H040CNT0□
C0G	4.7pF	±0.25pF	50	FG28C0G1H4R7CNT0□
C0G	5.0pF	±0.25pF	50	FG28C0G1H050CNT0□
C0G	6.0pF	±0.5pF	50	FG28C0G1H060DNT0□
C0G	6.8pF	±0.5pF	50	FG28C0G1H6R8DNT0□
C0G	7.0pF	±0.5pF	50	FG28C0G1H070DNT0□
C0G	8.0pF	±0.5pF	50	FG28C0G1H080DNT0□
C0G	9.0pF	±0.5pF	50	FG28C0G1H090DNT0□
C0G	10pF	±0.5pF	50	FG28C0G1H100DNT0□
C0G	12pF	±5%	50	FG28C0G1H120JNT0□
C0G	15pF	±5%	50	FG28C0G1H150JNT0□
C0G	18pF	±5%	50	FG28C0G1H180JNT0□
C0G	22pF	±5%	50	FG28C0G1H220JNT0□
C0G	27pF	±5%	50	FG28C0G1H270JNT0□
C0G	33pF	±5%	50	FG28C0G1H330JNT0□
C0G	39pF	±5%	50	FG28C0G1H390JNT0□
C0G	47pF	±5%	50	FG28C0G1H470JNT0□
C0G	56pF	±5%	50	FG28C0G1H560JNT0□
C0G	68pF	±5%	50	FG28C0G1H680JNT0□
C0G	82pF	±5%	50	FG28C0G1H820JNT0□
C0G	100pF	±5%	50	FG28C0G1H101JNT0□
C0G	120pF	±5%	50	FG28C0G1H121JNT0□
C0G	150pF	±5%	50	FG28C0G1H151JNT0□
C0G	180pF	±5%	50	FG28C0G1H181JNT0□
C0G	220pF	±5%	50	FG28C0G1H221JNT0□
C0G	270pF	±5%	50	FG28C0G1H271JNT0□
C0G	330pF	±5%	50	FG28C0G1H331JNT0□
C0G	390pF	±5%	50	FG28C0G1H391JNT0□
C0G	470pF	±5%	50	FG28C0G1H471JNT0□
C0G	560pF	±5%	50	FG28C0G1H561JNT0□
C0G	680pF	±5%	50	FG28C0G1H681JNT0□
C0G	820pF	±5%	50	FG28C0G1H821JNT0□
C0G	1nF	±5%	50	FG28C0G1H102JNT0□
C0G	1.2nF	±5%	50	FG28C0G1H122JNT0□
C0G	1.5nF	±5%	50	FG28C0G1H152JNT0□
C0G	1.8nF	±5%	50	FG28C0G1H182JNT0□
C0G	2.2nF	±5%	50	FG28C0G1H222JNT0□
C0G	2.7nF	±5%	50	FG28C0G1H272JNT0□
C0G	3.3nF	±5%	50	FG28C0G1H332JNT0□
C0G	3.9nF	±5%	50	FG28C0G1H392JNT0□
C0G	4.7nF	±5%	50	FG28C0G1H472JNT0□
C0G	5.6nF	±5%	50	FG28C0G1H562JNT0□
C0G	6.8nF	±5%	50	FG28C0G1H682JNT0□
C0G	8.2nF	±5%	50	FG28C0G1H822JNT0□

* The part numbers are TDK's standard specification products.

** The " □ " of the Part Number contains the packaging symbol, 0 (Bulk packaging) or 6 (Taping packaging).

⚠ Please be sure to request delivery specifications that provide further details on the features and specifications of the products for proper and safe use.
Please note that the contents may change without any prior notice due to reasons such as upgrading.

FG28 Type

■ELECTRICAL CHARACTERISTICS

□CHARACTERISTICS SPECIFICATION TABLE

CLASS 1 (TEMPERATURE COMPENSATION)

Temperature characteristics	Capacitance	Tolerance	Rated voltage Edc (V)	Part No.*
C0G	10nF	±5%	50	FG28C0G1H103JNT0□**
C0G	1.0pF	±0.25pF	100	FG28C0G2A010CNT0□
C0G	1.5pF	±0.25pF	100	FG28C0G2A1R5CNT0□
C0G	2.0pF	±0.25pF	100	FG28C0G2A020CNT0□
C0G	2.2pF	±0.25pF	100	FG28C0G2A2R2CNT0□
C0G	3.0pF	±0.25pF	100	FG28C0G2A030CNT0□
C0G	3.3pF	±0.25pF	100	FG28C0G2A3R3CNT0□
C0G	4.0pF	±0.25pF	100	FG28C0G2A040CNT0□
C0G	4.7pF	±0.25pF	100	FG28C0G2A4R7CNT0□
C0G	5.0pF	±0.25pF	100	FG28C0G2A050CNT0□
C0G	6.0pF	±0.5pF	100	FG28C0G2A060DNT0□
C0G	6.8pF	±0.5pF	100	FG28C0G2A6R8DNT0□
C0G	7.0pF	±0.5pF	100	FG28C0G2A070DNT0□
C0G	8.0pF	±0.5pF	100	FG28C0G2A080DNT0□
C0G	9.0pF	±0.5pF	100	FG28C0G2A090DNT0□
C0G	10pF	±0.5pF	100	FG28C0G2A100DNT0□
C0G	12pF	±5%	100	FG28C0G2A120JNT0□
C0G	15pF	±5%	100	FG28C0G2A150JNT0□
C0G	18pF	±5%	100	FG28C0G2A180JNT0□
C0G	22pF	±5%	100	FG28C0G2A220JNT0□
C0G	27pF	±5%	100	FG28C0G2A270JNT0□
C0G	33pF	±5%	100	FG28C0G2A330JNT0□
C0G	39pF	±5%	100	FG28C0G2A390JNT0□
C0G	47pF	±5%	100	FG28C0G2A470JNT0□
C0G	56pF	±5%	100	FG28C0G2A560JNT0□
C0G	68pF	±5%	100	FG28C0G2A680JNT0□
C0G	82pF	±5%	100	FG28C0G2A820JNT0□
C0G	100pF	±5%	100	FG28C0G2A101JNT0□
C0G	120pF	±5%	100	FG28C0G2A121JNT0□
C0G	150pF	±5%	100	FG28C0G2A151JNT0□
C0G	180pF	±5%	100	FG28C0G2A181JNT0□
C0G	220pF	±5%	100	FG28C0G2A221JNT0□
C0G	270pF	±5%	100	FG28C0G2A271JNT0□
C0G	330pF	±5%	100	FG28C0G2A331JNT0□
C0G	390pF	±5%	100	FG28C0G2A391JNT0□
C0G	470pF	±5%	100	FG28C0G2A471JNT0□
C0G	560pF	±5%	100	FG28C0G2A561JNT0□
C0G	680pF	±5%	100	FG28C0G2A681JNT0□
C0G	820pF	±5%	100	FG28C0G2A821JNT0□
C0G	1nF	±5%	100	FG28C0G2A102JNT0□
C0G	1.2nF	±5%	100	FG28C0G2A122JNT0□
C0G	1.5nF	±5%	100	FG28C0G2A152JNT0□
C0G	1.8nF	±5%	100	FG28C0G2A182JNT0□
C0G	2.2nF	±5%	100	FG28C0G2A222JNT0□
C0G	2.7nF	±5%	100	FG28C0G2A272JNT0□
C0G	3.3nF	±5%	100	FG28C0G2A332JNT0□
C0G	100pF	±5%	250	FG28C0G2E101JNT0□
C0G	120pF	±5%	250	FG28C0G2E121JNT0□
C0G	150pF	±5%	250	FG28C0G2E151JNT0□
C0G	180pF	±5%	250	FG28C0G2E181JNT0□
C0G	220pF	±5%	250	FG28C0G2E221JNT0□

* The part numbers are TDK's standard specification products.

** The " □ " of the Part Number contains the packaging symbol, 0 (Bulk packaging) or 6 (Taping packaging).

⚠ Please be sure to request delivery specifications that provide further details on the features and specifications of the products for proper and safe use.
Please note that the contents may change without any prior notice due to reasons such as upgrading.

FG28 Type

■ELECTRICAL CHARACTERISTICS

□CHARACTERISTICS SPECIFICATION TABLE

CLASS 1 (TEMPERATURE COMPENSATION)

Temperature characteristics	Capacitance	Tolerance	Rated voltage Edc (V)	Part No.*
C0G	270pF	±5%	250	FG28C0G2E271JNT0□**
C0G	330pF	±5%	250	FG28C0G2E331JNT0□
C0G	390pF	±5%	250	FG28C0G2E391JNT0□
C0G	470pF	±5%	250	FG28C0G2E471JNT0□
C0G	560pF	±5%	250	FG28C0G2E561JNT0□
C0G	680pF	±5%	250	FG28C0G2E681JNT0□
C0G	820pF	±5%	250	FG28C0G2E821JNT0□
C0G	1nF	±5%	250	FG28C0G2E102JNT0□
C0G	1.2nF	±5%	250	FG28C0G2E122JNT0□
C0G	1.5nF	±5%	250	FG28C0G2E152JNT0□
C0G	1.8nF	±5%	250	FG28C0G2E182JNT0□
C0G	2.2nF	±5%	250	FG28C0G2E222JNT0□

* The part numbers are TDK's standard specification products.

** The " □ " of the Part Number contains the packaging symbol, 0 (Bulk packaging) or 6 (Taping packaging).

⚠ Please be sure to request delivery specifications that provide further details on the features and specifications of the products for proper and safe use.
Please note that the contents may change without any prior notice due to reasons such as upgrading.

FG28 Type

■ELECTRICAL CHARACTERISTICS

□CHARACTERISTICS SPECIFICATION TABLE

CLASS 2 (TEMPERATURE STABLE)

Temperature characteristics	Capacitance	Tolerance	Rated voltage Edc (V)	Part No.*
X5R	1.5uF	±10%	25	FG28X5R1E155KRT0□**
X5R	2.2uF	±10%	25	FG28X5R1E225KRT0□
X5R	3.3uF	±10%	25	FG28X5R1E335KRT0□
X5R	4.7uF	±10%	25	FG28X5R1E475KRT0□
X5R	6.8uF	±10%	25	FG28X5R1E685KRT0□
X5R	10uF	±10%	25	FG28X5R1E106KRT0□
X5R	680nF	±10%	50	FG28X5R1H684KRT0□
X5R	1uF	±10%	50	FG28X5R1H105KRT0□
X7R	1.5uF	±10%	10	FG28X7R1A155KRT0□
X7R	2.2uF	±10%	10	FG28X7R1A225KRT0□
X7R	150nF	±10%	25	FG28X7R1E154KNT0□
X7R	680nF	±10%	25	FG28X7R1E684KRT0□
X7R	1uF	±10%	25	FG28X7R1E105KRT0□
X7R	1nF	±10%	50	FG28X7R1H102KNT0□
X7R	1.5nF	±10%	50	FG28X7R1H152KNT0□
X7R	2.2nF	±10%	50	FG28X7R1H222KNT0□
X7R	3.3nF	±10%	50	FG28X7R1H332KNT0□
X7R	4.7nF	±10%	50	FG28X7R1H472KNT0□
X7R	6.8nF	±10%	50	FG28X7R1H682KNT0□
X7R	10nF	±10%	50	FG28X7R1H103KNT0□
X7R	15nF	±10%	50	FG28X7R1H153KNT0□
X7R	22nF	±10%	50	FG28X7R1H223KNT0□
X7R	33nF	±10%	50	FG28X7R1H333KNT0□
X7R	47nF	±10%	50	FG28X7R1H473KNT0□
X7R	68nF	±10%	50	FG28X7R1H683KNT0□
X7R	100nF	±10%	50	FG28X7R1H104KNT0□
X7R	150nF	±10%	50	FG28X7R1H154KRT0□
X7R	220nF	±10%	50	FG28X7R1H224KRT0□
X7R	330nF	±10%	50	FG28X7R1H334KRT0□
X7R	470nF	±10%	50	FG28X7R1H474KRT0□
X7R	1nF	±10%	100	FG28X7R2A102KNT0□
X7R	1.5nF	±10%	100	FG28X7R2A152KNT0□
X7R	2.2nF	±10%	100	FG28X7R2A222KNT0□
X7R	3.3nF	±10%	100	FG28X7R2A332KNT0□
X7R	4.7nF	±10%	100	FG28X7R2A472KNT0□
X7R	6.8nF	±10%	100	FG28X7R2A682KNT0□
X7R	10nF	±10%	100	FG28X7R2A103KNT0□
X7R	15nF	±10%	100	FG28X7R2A153KNT0□
X7R	22nF	±10%	100	FG28X7R2A223KNT0□
X7S	33nF	±10%	100	FG28X7S2A333KRT0□
X7S	47nF	±10%	100	FG28X7S2A473KRT0□
X7S	68nF	±10%	100	FG28X7S2A683KRT0□
X7S	100nF	±10%	100	FG28X7S2A104KRT0□

* The part numbers are TDK's standard specification products.

** The " □ " of the Part Number contains the packaging symbol, 0 (Bulk packaging) or 6 (Taping packaging).

⚠ Please be sure to request delivery specifications that provide further details on the features and specifications of the products for proper and safe use.
Please note that the contents may change without any prior notice due to reasons such as upgrading.

FG24 Type

SHAPE & DIMENSIONS

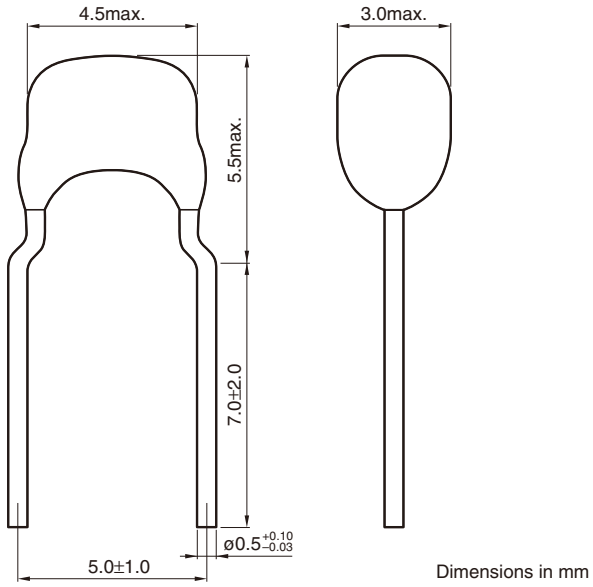

Dimensions in mm

⚠ Please be sure to request delivery specifications that provide further details on the features and specifications of the products for proper and safe use.
Please note that the contents may change without any prior notice due to reasons such as upgrading.

FG24 Type

■ELECTRICAL CHARACTERISTICS

□CHARACTERISTICS SPECIFICATION TABLE

CLASS 1 (TEMPERATURE COMPENSATION)

Temperature characteristics	Capacitance	Tolerance	Rated voltage Edc (V)	Part No.*
C0G	15nF	±5%	50	FG24C0G1H153JNT0□**
C0G	22nF	±5%	50	FG24C0G1H223JNT0□
C0G	33nF	±5%	50	FG24C0G1H333JNT0□
C0G	3.9nF	±5%	100	FG24C0G2A392JNT0□
C0G	4.7nF	±5%	100	FG24C0G2A472JNT0□
C0G	5.6nF	±5%	100	FG24C0G2A562JNT0□
C0G	6.8nF	±5%	100	FG24C0G2A682JNT0□
C0G	8.2nF	±5%	100	FG24C0G2A822JNT0□
C0G	10nF	±5%	100	FG24C0G2A103JNT0□
C0G	2.7nF	±5%	250	FG24C0G2E272JNT0□
C0G	3.3nF	±5%	250	FG24C0G2E332JNT0□
C0G	3.9nF	±5%	250	FG24C0G2E392JNT0□
C0G	4.7nF	±5%	250	FG24C0G2E472JNT0□
C0G	5.6nF	±5%	250	FG24C0G2E562JNT0□
C0G	6.8nF	±5%	250	FG24C0G2E682JNT0□
C0G	8.2nF	±5%	250	FG24C0G2E822JNT0□
C0G	10nF	±5%	250	FG24C0G2E103JNT0□
C0G	100pF	±5%	450	FG24C0G2W101JNT0□
C0G	120pF	±5%	450	FG24C0G2W121JNT0□
C0G	150pF	±5%	450	FG24C0G2W151JNT0□
C0G	180pF	±5%	450	FG24C0G2W181JNT0□
C0G	220pF	±5%	450	FG24C0G2W221JNT0□
C0G	270pF	±5%	450	FG24C0G2W271JNT0□
C0G	330pF	±5%	450	FG24C0G2W331JNT0□
C0G	390pF	±5%	450	FG24C0G2W391JNT0□
C0G	470pF	±5%	450	FG24C0G2W471JNT0□
C0G	560pF	±5%	450	FG24C0G2W561JNT0□
C0G	680pF	±5%	450	FG24C0G2W681JNT0□
C0G	820pF	±5%	450	FG24C0G2W821JNT0□
C0G	1nF	±5%	450	FG24C0G2W102JNT0□
C0G	1.2nF	±5%	450	FG24C0G2W122JNT0□
C0G	1.5nF	±5%	450	FG24C0G2W152JNT0□
C0G	1.8nF	±5%	450	FG24C0G2W182JNT0□
C0G	2.2nF	±5%	450	FG24C0G2W222JNT0□
C0G	2.7nF	±5%	450	FG24C0G2W272JNT0□
C0G	3.3nF	±5%	450	FG24C0G2W332JNT0□
C0G	3.9nF	±5%	450	FG24C0G2W392JNT0□
C0G	4.7nF	±5%	450	FG24C0G2W472JNT0□
C0G	5.6nF	±5%	450	FG24C0G2W562JNT0□

* The part numbers are TDK's standard specification products.

** The " □ " of the Part Number contains the packaging symbol, 0 (Bulk packaging) or 6 (Taping packaging).

⚠ Please be sure to request delivery specifications that provide further details on the features and specifications of the products for proper and safe use.
Please note that the contents may change without any prior notice due to reasons such as upgrading.

FG24 Type

■ELECTRICAL CHARACTERISTICS

□CHARACTERISTICS SPECIFICATION TABLE

CLASS 2 (TEMPERATURE STABLE)

Temperature characteristics	Capacitance	Tolerance	Rated voltage Edc (V)	Part No.*
X5R	15uF	±20%	25	FG24X5R1E156MRT0□**
X5R	22uF	±20%	25	FG24X5R1E226MRT0□
X5R	3.3uF	±10%	50	FG24X5R1H335KRT0□
X5R	4.7uF	±10%	50	FG24X5R1H475KRT0□
X7R	6.8uF	±10%	10	FG24X7R1A685KRT0□
X7R	10uF	±10%	10	FG24X7R1A106KRT0□
X7R	680nF	±10%	16	FG24X7R1C684KNT0□
X7R	470nF	±10%	25	FG24X7R1E474KNT0□
X7R	3.3uF	±10%	25	FG24X7R1E335KRT0□
X7R	4.7uF	±10%	25	FG24X7R1E475KRT0□
X7R	150nF	±10%	50	FG24X7R1H154KNT0□
X7R	220nF	±10%	50	FG24X7R1H224KNT0□
X7R	330nF	±10%	50	FG24X7R1H334KNT0□
X7R	680nF	±10%	50	FG24X7R1H684KRT0□
X7R	1uF	±10%	50	FG24X7R1H105KRT0□
X7R	1.5uF	±10%	50	FG24X7R1H155KRT0□
X7R	2.2uF	±10%	50	FG24X7R1H225KRT0□
X7R	33nF	±10%	100	FG24X7R2A333KNT0□
X7R	47nF	±10%	100	FG24X7R2A473KNT0□
X7R	68nF	±10%	100	FG24X7R2A683KNT0□
X7R	100nF	±10%	100	FG24X7R2A104KNT0□
X7R	1nF	±10%	250	FG24X7R2E102KNT0□
X7R	1.5nF	±10%	250	FG24X7R2E152KNT0□
X7R	2.2nF	±10%	250	FG24X7R2E222KNT0□
X7R	3.3nF	±10%	250	FG24X7R2E332KNT0□
X7R	4.7nF	±10%	250	FG24X7R2E472KNT0□
X7R	6.8nF	±10%	250	FG24X7R2E682KNT0□
X7R	10nF	±10%	250	FG24X7R2E103KNT0□
X7R	15nF	±10%	250	FG24X7R2E153KNT0□
X7R	22nF	±10%	250	FG24X7R2E223KNT0□
X7S	150nF	±10%	100	FG24X7S2A154KRT0□
X7S	220nF	±10%	100	FG24X7S2A224KRT0□
X7S	330nF	±10%	100	FG24X7S2A334KRT0□
X7S	470nF	±10%	100	FG24X7S2A474KRT0□
X7S	680nF	±10%	100	FG24X7S2A684KRT0□
X7S	1uF	±10%	100	FG24X7S2A105KRT0□
X7T	33nF	±10%	250	FG24X7T2E333KNT0□
X7T	47nF	±10%	250	FG24X7T2E473KNT0□
X7T	68nF	±10%	250	FG24X7T2E683KNT0□
X7T	100nF	±10%	250	FG24X7T2E104KNT0□

* The part numbers are TDK's standard specification products.

** The " □ " of the Part Number contains the packaging symbol, 0 (Bulk packaging) or 6 (Taping packaging).

⚠ Please be sure to request delivery specifications that provide further details on the features and specifications of the products for proper and safe use.
Please note that the contents may change without any prior notice due to reasons such as upgrading.

FG26 Type

SHAPE & DIMENSIONS

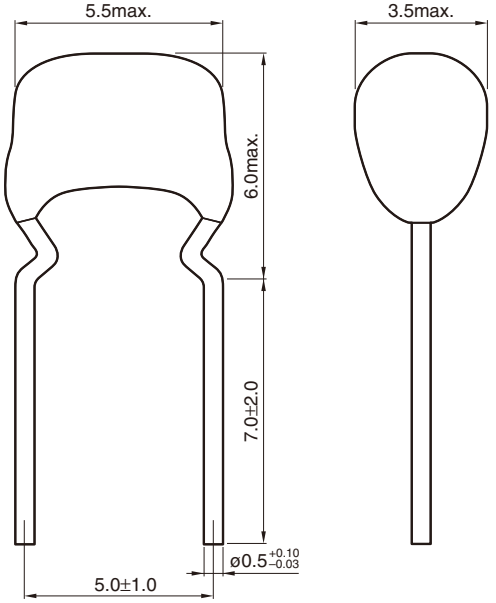

Dimensions in mm

⚠ Please be sure to request delivery specifications that provide further details on the features and specifications of the products for proper and safe use.
Please note that the contents may change without any prior notice due to reasons such as upgrading.

FG26 Type

■ELECTRICAL CHARACTERISTICS

□CHARACTERISTICS SPECIFICATION TABLE

CLASS 1 (TEMPERATURE COMPENSATION)

Temperature characteristics	Capacitance	Tolerance	Rated voltage Edc (V)	Part No.*
C0G	47nF	±5%	50	FG26C0G1H473JNT0□**
C0G	68nF	±5%	50	FG26C0G1H683JNT0□
C0G	100nF	±5%	50	FG26C0G1H104JNT0□
C0G	15nF	±5%	100	FG26C0G2A153JNT0□
C0G	22nF	±5%	100	FG26C0G2A223JNT0□
C0G	33nF	±5%	100	FG26C0G2A333JNT0□
C0G	15nF	±5%	250	FG26C0G2E153JNT0□
C0G	22nF	±5%	250	FG26C0G2E223JNT0□
C0G	6.8nF	±5%	450	FG26C0G2W682JNT0□
C0G	8.2nF	±5%	450	FG26C0G2W822JNT0□
C0G	10nF	±5%	450	FG26C0G2W103JNT0□
C0G	15nF	±5%	450	FG26C0G2W153JNT0□
C0G	100pF	±5%	630	FG26C0G2J101JNT0□
C0G	120pF	±5%	630	FG26C0G2J121JNT0□
C0G	150pF	±5%	630	FG26C0G2J151JNT0□
C0G	180pF	±5%	630	FG26C0G2J181JNT0□
C0G	220pF	±5%	630	FG26C0G2J221JNT0□
C0G	270pF	±5%	630	FG26C0G2J271JNT0□
C0G	330pF	±5%	630	FG26C0G2J331JNT0□
C0G	390pF	±5%	630	FG26C0G2J391JNT0□
C0G	470pF	±5%	630	FG26C0G2J471JNT0□
C0G	560pF	±5%	630	FG26C0G2J561JNT0□
C0G	680pF	±5%	630	FG26C0G2J681JNT0□
C0G	820pF	±5%	630	FG26C0G2J821JNT0□
C0G	1nF	±5%	630	FG26C0G2J102JNT0□
C0G	1.2nF	±5%	630	FG26C0G2J122JNT0□
C0G	1.5nF	±5%	630	FG26C0G2J152JNT0□
C0G	1.8nF	±5%	630	FG26C0G2J182JNT0□
C0G	2.2nF	±5%	630	FG26C0G2J222JNT0□
C0G	2.7nF	±5%	630	FG26C0G2J272JNT0□
C0G	3.3nF	±5%	630	FG26C0G2J332JNT0□
C0G	3.9nF	±5%	630	FG26C0G2J392JNT0□
C0G	4.7nF	±5%	630	FG26C0G2J472JNT0□
C0G	5.6nF	±5%	630	FG26C0G2J562JNT0□
C0G	6.8nF	±5%	630	FG26C0G2J682JNT0□
C0G	8.2nF	±5%	630	FG26C0G2J822JNT0□
C0G	10nF	±5%	630	FG26C0G2J103JNT0□

* The part numbers are TDK's standard specification products.

** The " □ " of the Part Number contains the packaging symbol, 0 (Bulk packaging) or 6 (Taping packaging).

⚠ Please be sure to request delivery specifications that provide further details on the features and specifications of the products for proper and safe use.
Please note that the contents may change without any prior notice due to reasons such as upgrading.

FG26 Type

■ELECTRICAL CHARACTERISTICS

□CHARACTERISTICS SPECIFICATION TABLE

CLASS 2 (TEMPERATURE STABLE)

Temperature characteristics	Capacitance	Tolerance	Rated voltage Edc (V)	Part No.*
X5R	33uF	±20%	25	FG26X5R1E336MRT0□**
X5R	47uF	±20%	25	FG26X5R1E476MRT0□
X5R	6.8uF	±10%	50	FG26X5R1H685KRT0□
X5R	10uF	±10%	50	FG26X5R1H106KRT0□
X7R	1uF	±10%	25	FG26X7R1E105KNT0□
X7R	1.5uF	±10%	25	FG26X7R1E155KNT0□
X7R	2.2uF	±10%	25	FG26X7R1E225KNT0□
X7R	6.8uF	±10%	25	FG26X7R1E685KRT0□
X7R	10uF	±10%	25	FG26X7R1E106KRT0□
X7R	470nF	±10%	50	FG26X7R1H474KNT0□
X7R	680nF	±10%	50	FG26X7R1H684KNT0□
X7R	3.3uF	±10%	50	FG26X7R1H335KRT0□
X7R	4.7uF	±10%	50	FG26X7R1H475KRT0□
X7R	150nF	±10%	100	FG26X7R2A154KNT0□
X7R	220nF	±10%	100	FG26X7R2A224KNT0□
X7R	330nF	±10%	100	FG26X7R2A334KNT0□
X7R	470nF	±10%	100	FG26X7R2A474KNT0□
X7R	680nF	±10%	100	FG26X7R2A684KNT0□
X7R	1uF	±10%	100	FG26X7R2A105KNT0□
X7R	33nF	±10%	250	FG26X7R2E333KNT0□
X7R	47nF	±10%	250	FG26X7R2E473KNT0□
X7R	68nF	±10%	250	FG26X7R2E683KNT0□
X7R	100nF	±10%	250	FG26X7R2E104KNT0□
X7R	1nF	±10%	630	FG26X7R2J102KNT0□
X7R	1.5nF	±10%	630	FG26X7R2J152KNT0□
X7R	2.2nF	±10%	630	FG26X7R2J222KNT0□
X7R	3.3nF	±10%	630	FG26X7R2J332KNT0□
X7R	4.7nF	±10%	630	FG26X7R2J472KNT0□
X7R	6.8nF	±10%	630	FG26X7R2J682KNT0□
X7R	10nF	±10%	630	FG26X7R2J103KNT0□
X7R	15nF	±10%	630	FG26X7R2J153KNT0□
X7R	22nF	±10%	630	FG26X7R2J223KNT0□
X7R	33nF	±10%	630	FG26X7R2J333KNT0□
X7S	1.5uF	±10%	100	FG26X7S2A155KRT0□
X7S	2.2uF	±10%	100	FG26X7S2A225KRT0□
X7S	3.3uF	±10%	100	FG26X7S2A335KRT0□
X7T	150nF	±10%	250	FG26X7T2E154KNT0□
X7T	220nF	±10%	250	FG26X7T2E224KNT0□

* The part numbers are TDK's standard specification products.

** The " □ " of the Part Number contains the packaging symbol, 0 (Bulk packaging) or 6 (Taping packaging).

⚠ Please be sure to request delivery specifications that provide further details on the features and specifications of the products for proper and safe use.
Please note that the contents may change without any prior notice due to reasons such as upgrading.

FG20 Type

SHAPE & DIMENSIONS

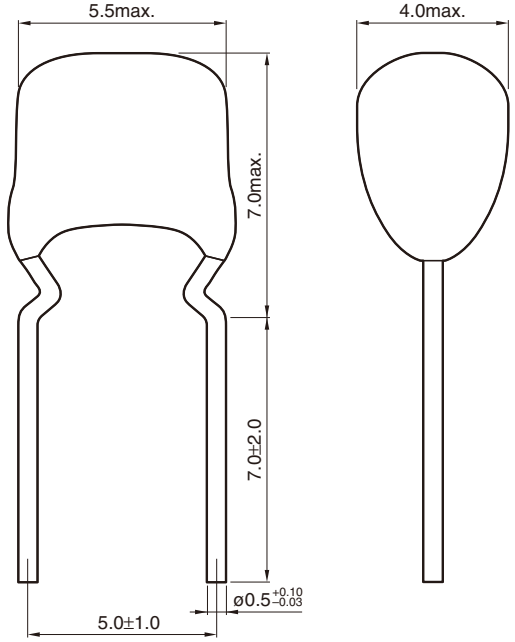

Dimensions in mm

FG20 Type

■ELECTRICAL CHARACTERISTICS

□CHARACTERISTICS SPECIFICATION TABLE

CLASS 1 (TEMPERATURE COMPENSATION)

Temperature characteristics	Capacitance	Tolerance	Rated voltage Edc (V)	Part No.*
C0G	47nF	±5%	100	FG20C0G2A473JNT0□**
C0G	68nF	±5%	100	FG20C0G2A683JNT0□
C0G	33nF	±5%	250	FG20C0G2E333JNT0□
C0G	47nF	±5%	250	FG20C0G2E473JNT0□
C0G	22nF	±5%	450	FG20C0G2W223JNT0□
C0G	33nF	±5%	450	FG20C0G2W333JNT0□
C0G	15nF	±5%	630	FG20C0G2J153JNT0□
C0G	22nF	±5%	630	FG20C0G2J223JNT0□
C0G	33nF	±5%	630	FG20C0G2J333JNT0□

* The part numbers are TDK's standard specification products.

** The " □ " of the Part Number contains the packaging symbol, 0 (Bulk packaging) or 6 (Taping packaging).

CLASS 2 (TEMPERATURE STABLE)

Temperature characteristics	Capacitance	Tolerance	Rated voltage Edc (V)	Part No.*
X5R	68uF	±20%	6.3	FG20X5R0J686MRT0□**
X5R	100uF	±20%	6.3	FG20X5R0J107MRT0□
X7R	15uF	±20%	16	FG20X7R1C156MRT0□
X7R	22uF	±20%	16	FG20X7R1C226MRT0□
X7R	3.3uF	±10%	25	FG20X7R1E335KNT0□
X7R	4.7uF	±10%	25	FG20X7R1E475KNT0□
X7R	1uF	±10%	50	FG20X7R1H105KNT0□
X7R	1.5uF	±10%	50	FG20X7R1H155KNT0□
X7R	10uF	±10%	50	FG20X7R1H106KRT0□
X7R	1.5uF	±10%	100	FG20X7R2A155KRT0□
X7R	2.2uF	±10%	100	FG20X7R2A225KRT0□
X7R	150nF	±10%	250	FG20X7R2E154KNT0□
X7R	220nF	±10%	250	FG20X7R2E224KNT0□
X7R	47nF	±10%	630	FG20X7R2J473KNT0□
X7R	68nF	±10%	630	FG20X7R2J683KNT0□
X7S	6.8uF	±10%	50	FG20X7S1H685KRT0□
X7S	10uF	±10%	50	FG20X7S1H106KRT0□
X7S	4.7uF	±10%	100	FG20X7S2A475KRT0□
X7T	330nF	±10%	250	FG20X7T2E334KNT0□

* The part numbers are TDK's standard specification products.

** The " □ " of the Part Number contains the packaging symbol, 0 (Bulk packaging) or 6 (Taping packaging).

⚠ Please be sure to request delivery specifications that provide further details on the features and specifications of the products for proper and safe use.
Please note that the contents may change without any prior notice due to reasons such as upgrading.

FG22 Type

SHAPE & DIMENSIONS

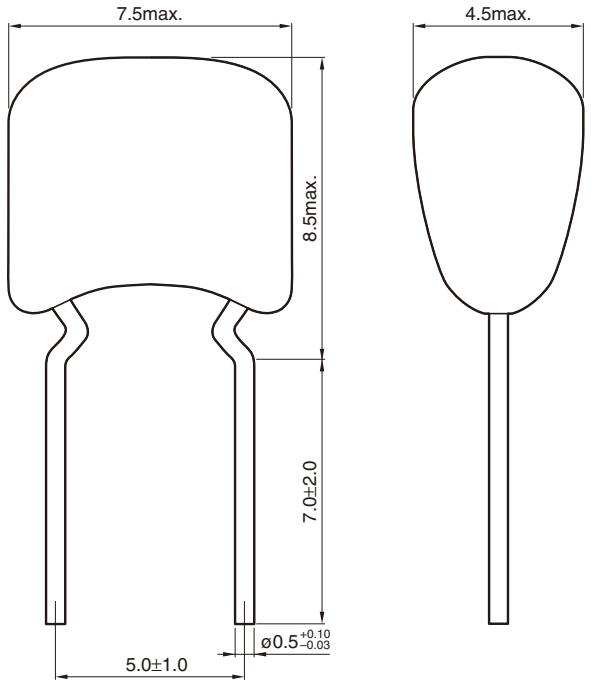

Dimensions in mm

⚠ Please be sure to request delivery specifications that provide further details on the features and specifications of the products for proper and safe use.
Please note that the contents may change without any prior notice due to reasons such as upgrading.

FG22 Type

■ELECTRICAL CHARACTERISTICS

□CHARACTERISTICS SPECIFICATION TABLE

CLASS 1 (TEMPERATURE COMPENSATION)

Temperature characteristics	Capacitance	Tolerance	Rated voltage Edc (V)	Part No.*
C0G	150nF	±5%	50	FG22C0G1H154JNT0□**
C0G	220nF	±5%	50	FG22C0G1H224JNT0□
C0G	100nF	±5%	100	FG22C0G2A104JNT0□
C0G	68nF	±5%	250	FG22C0G2E683JRT0□
C0G	100nF	±5%	250	FG22C0G2E104JRT0□
C0G	47nF	±5%	450	FG22C0G2W473JNT0□
C0G	68nF	±5%	450	FG22C0G2W683JNT0□
C0G	47nF	±5%	630	FG22C0G2J473JNT0□

* The part numbers are TDK's standard specification products.

** The " □ " of the Part Number contains the packaging symbol, 0 (Bulk packaging) or 6 (Taping packaging).

CLASS 2 (TEMPERATURE STABLE)

Temperature characteristics	Capacitance	Tolerance	Rated voltage Edc (V)	Part No.*
X5R	47uF	±20%	10	FG22X5R1A476MNT0□**
X5R	33uF	±20%	16	FG22X5R1C336MNT0□
X7R	33uF	±20%	16	FG22X7R1C336MRT0□
X7R	10uF	±10%	25	FG22X7R1E106KNT0□
X7R	15uF	±20%	25	FG22X7R1E156MRT0□
X7R	22uF	±20%	25	FG22X7R1E226MRT0□
X7R	2.2uF	±10%	50	FG22X7R1H225KNT0□
X7R	3.3uF	±10%	50	FG22X7R1H335KNT0□
X7R	6.8uF	±10%	50	FG22X7R1H685KRT0□
X7R	1.5uF	±10%	100	FG22X7R2A155KNT0□
X7R	2.2uF	±10%	100	FG22X7R2A225KNT0□
X7R	330nF	±10%	250	FG22X7R2E334KNT0□
X7R	470nF	±10%	250	FG22X7R2E474KNT0□
X7R	100nF	±10%	630	FG22X7R2J104KNT0□
X7T	680nF	±10%	250	FG22X7T2E684KNT0□
X7T	1uF	±10%	250	FG22X7T2E105KNT0□

* The part numbers are TDK's standard specification products.

** The " □ " of the Part Number contains the packaging symbol, 0 (Bulk packaging) or 6 (Taping packaging).

⚠ Please be sure to request delivery specifications that provide further details on the features and specifications of the products for proper and safe use.
Please note that the contents may change without any prior notice due to reasons such as upgrading.

FG18 Type

SHAPE & DIMENSIONS

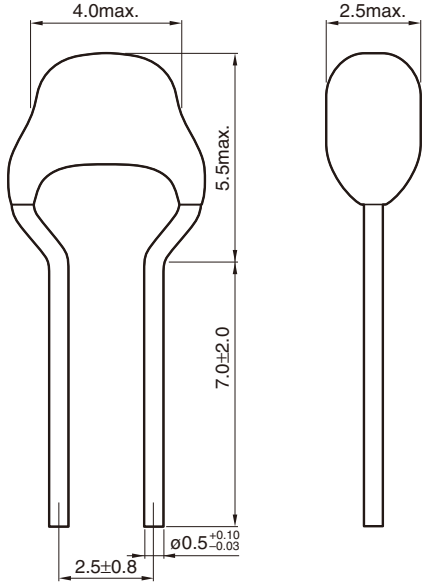

Dimensions in mm

⚠ Please be sure to request delivery specifications that provide further details on the features and specifications of the products for proper and safe use.
Please note that the contents may change without any prior notice due to reasons such as upgrading.

FG18 Type

■ELECTRICAL CHARACTERISTICS

□CHARACTERISTICS SPECIFICATION TABLE

CLASS 1 (TEMPERATURE COMPENSATION)

Temperature characteristics	Capacitance	Tolerance	Rated voltage Edc (V)	Part No.*
C0G	1.0pF	±0.25pF	50	FG18C0G1H010CNT0□**
C0G	1.5pF	±0.25pF	50	FG18C0G1H1R5CNT0□
C0G	2.0pF	±0.25pF	50	FG18C0G1H020CNT0□
C0G	2.2pF	±0.25pF	50	FG18C0G1H2R2CNT0□
C0G	3.0pF	±0.25pF	50	FG18C0G1H030CNT0□
C0G	3.3pF	±0.25pF	50	FG18C0G1H3R3CNT0□
C0G	4.0pF	±0.25pF	50	FG18C0G1H040CNT0□
C0G	4.7pF	±0.25pF	50	FG18C0G1H4R7CNT0□
C0G	5.0pF	±0.25pF	50	FG18C0G1H050CNT0□
C0G	6.0pF	±0.5pF	50	FG18C0G1H060DNT0□
C0G	6.8pF	±0.5pF	50	FG18C0G1H6R8DNT0□
C0G	7.0pF	±0.5pF	50	FG18C0G1H070DNT0□
C0G	8.0pF	±0.5pF	50	FG18C0G1H080DNT0□
C0G	9.0pF	±0.5pF	50	FG18C0G1H090DNT0□
C0G	10pF	±0.5pF	50	FG18C0G1H100DNT0□
C0G	12pF	±5%	50	FG18C0G1H120JNT0□
C0G	15pF	±5%	50	FG18C0G1H150JNT0□
C0G	18pF	±5%	50	FG18C0G1H180JNT0□
C0G	22pF	±5%	50	FG18C0G1H220JNT0□
C0G	27pF	±5%	50	FG18C0G1H270JNT0□
C0G	33pF	±5%	50	FG18C0G1H330JNT0□
C0G	39pF	±5%	50	FG18C0G1H390JNT0□
C0G	47pF	±5%	50	FG18C0G1H470JNT0□
C0G	56pF	±5%	50	FG18C0G1H560JNT0□
C0G	68pF	±5%	50	FG18C0G1H680JNT0□
C0G	82pF	±5%	50	FG18C0G1H820JNT0□
C0G	100pF	±5%	50	FG18C0G1H101JNT0□
C0G	120pF	±5%	50	FG18C0G1H121JNT0□
C0G	150pF	±5%	50	FG18C0G1H151JNT0□
C0G	180pF	±5%	50	FG18C0G1H181JNT0□
C0G	220pF	±5%	50	FG18C0G1H221JNT0□
C0G	270pF	±5%	50	FG18C0G1H271JNT0□
C0G	330pF	±5%	50	FG18C0G1H331JNT0□
C0G	390pF	±5%	50	FG18C0G1H391JNT0□
C0G	470pF	±5%	50	FG18C0G1H471JNT0□
C0G	560pF	±5%	50	FG18C0G1H561JNT0□
C0G	680pF	±5%	50	FG18C0G1H681JNT0□
C0G	820pF	±5%	50	FG18C0G1H821JNT0□
C0G	1nF	±5%	50	FG18C0G1H102JNT0□
C0G	1.2nF	±5%	50	FG18C0G1H122JNT0□
C0G	1.5nF	±5%	50	FG18C0G1H152JNT0□
C0G	1.8nF	±5%	50	FG18C0G1H182JNT0□
C0G	2.2nF	±5%	50	FG18C0G1H222JNT0□
C0G	2.7nF	±5%	50	FG18C0G1H272JNT0□
C0G	3.3nF	±5%	50	FG18C0G1H332JNT0□
C0G	3.9nF	±5%	50	FG18C0G1H392JNT0□
C0G	4.7nF	±5%	50	FG18C0G1H472JNT0□
C0G	5.6nF	±5%	50	FG18C0G1H562JNT0□
C0G	6.8nF	±5%	50	FG18C0G1H682JNT0□
C0G	8.2nF	±5%	50	FG18C0G1H822JNT0□

* The part numbers are TDK's standard specification products.

** The " □ " of the Part Number contains the packaging symbol, 0 (Bulk packaging) or 6 (Taping packaging).

⚠ Please be sure to request delivery specifications that provide further details on the features and specifications of the products for proper and safe use.
Please note that the contents may change without any prior notice due to reasons such as upgrading.

FG18 Type

■ELECTRICAL CHARACTERISTICS

□CHARACTERISTICS SPECIFICATION TABLE

CLASS 1 (TEMPERATURE COMPENSATION)

Temperature characteristics	Capacitance	Tolerance	Rated voltage Edc (V)	Part No.*
C0G	10nF	±5%	50	FG18C0G1H103JNT0□**
C0G	1.0pF	±0.25pF	100	FG18C0G2A010CNT0□
C0G	1.5pF	±0.25pF	100	FG18C0G2A1R5CNT0□
C0G	2.0pF	±0.25pF	100	FG18C0G2A020CNT0□
C0G	2.2pF	±0.25pF	100	FG18C0G2A2R2CNT0□
C0G	3.0pF	±0.25pF	100	FG18C0G2A030CNT0□
C0G	3.3pF	±0.25pF	100	FG18C0G2A3R3CNT0□
C0G	4.0pF	±0.25pF	100	FG18C0G2A040CNT0□
C0G	4.7pF	±0.25pF	100	FG18C0G2A4R7CNT0□
C0G	5.0pF	±0.25pF	100	FG18C0G2A050CNT0□
C0G	6.0pF	±0.5pF	100	FG18C0G2A060DNT0□
C0G	6.8pF	±0.5pF	100	FG18C0G2A6R8DNT0□
C0G	7.0pF	±0.5pF	100	FG18C0G2A070DNT0□
C0G	8.0pF	±0.5pF	100	FG18C0G2A080DNT0□
C0G	9.0pF	±0.5pF	100	FG18C0G2A090DNT0□
C0G	10pF	±0.5pF	100	FG18C0G2A100DNT0□
C0G	12pF	±5%	100	FG18C0G2A120JNT0□
C0G	15pF	±5%	100	FG18C0G2A150JNT0□
C0G	18pF	±5%	100	FG18C0G2A180JNT0□
C0G	22pF	±5%	100	FG18C0G2A220JNT0□
C0G	27pF	±5%	100	FG18C0G2A270JNT0□
C0G	33pF	±5%	100	FG18C0G2A330JNT0□
C0G	39pF	±5%	100	FG18C0G2A390JNT0□
C0G	47pF	±5%	100	FG18C0G2A470JNT0□
C0G	56pF	±5%	100	FG18C0G2A560JNT0□
C0G	68pF	±5%	100	FG18C0G2A680JNT0□
C0G	82pF	±5%	100	FG18C0G2A820JNT0□
C0G	100pF	±5%	100	FG18C0G2A101JNT0□
C0G	120pF	±5%	100	FG18C0G2A121JNT0□
C0G	150pF	±5%	100	FG18C0G2A151JNT0□
C0G	180pF	±5%	100	FG18C0G2A181JNT0□
C0G	220pF	±5%	100	FG18C0G2A221JNT0□
C0G	270pF	±5%	100	FG18C0G2A271JNT0□
C0G	330pF	±5%	100	FG18C0G2A331JNT0□
C0G	390pF	±5%	100	FG18C0G2A391JNT0□
C0G	470pF	±5%	100	FG18C0G2A471JNT0□
C0G	560pF	±5%	100	FG18C0G2A561JNT0□
C0G	680pF	±5%	100	FG18C0G2A681JNT0□
C0G	820pF	±5%	100	FG18C0G2A821JNT0□
C0G	1nF	±5%	100	FG18C0G2A102JNT0□
C0G	1.2nF	±5%	100	FG18C0G2A122JNT0□
C0G	1.5nF	±5%	100	FG18C0G2A152JNT0□
C0G	1.8nF	±5%	100	FG18C0G2A182JNT0□
C0G	2.2nF	±5%	100	FG18C0G2A222JNT0□
C0G	2.7nF	±5%	100	FG18C0G2A272JNT0□
C0G	3.3nF	±5%	100	FG18C0G2A332JNT0□

* The part numbers are TDK's standard specification products.

** The " □ " of the Part Number contains the packaging symbol, 0 (Bulk packaging) or 6 (Taping packaging).

⚠ Please be sure to request delivery specifications that provide further details on the features and specifications of the products for proper and safe use.
Please note that the contents may change without any prior notice due to reasons such as upgrading.

FG18 Type

■ELECTRICAL CHARACTERISTICS

□CHARACTERISTICS SPECIFICATION TABLE

CLASS 2 (TEMPERATURE STABLE)

Temperature characteristics	Capacitance	Tolerance	Rated voltage Edc (V)	Part No.*
X5R	1.5uF	±10%	25	FG18X5R1E155KRT0□**
X5R	2.2uF	±10%	25	FG18X5R1E225KRT0□
X5R	3.3uF	±10%	25	FG18X5R1E335KRT0□
X5R	4.7uF	±10%	25	FG18X5R1E475KRT0□
X5R	6.8uF	±10%	25	FG18X5R1E685KRT0□
X5R	10uF	±10%	25	FG18X5R1E106KRT0□
X5R	680nF	±10%	50	FG18X5R1H684KRT0□
X5R	1uF	±10%	50	FG18X5R1H105KRT0□
X7R	1.5uF	±10%	10	FG18X7R1A155KRT0□
X7R	2.2uF	±10%	10	FG18X7R1A225KRT0□
X7R	150nF	±10%	25	FG18X7R1E154KNT0□
X7R	680nF	±10%	25	FG18X7R1E684KRT0□
X7R	1uF	±10%	25	FG18X7R1E105KRT0□
X7R	1nF	±10%	50	FG18X7R1H102KNT0□
X7R	1.5nF	±10%	50	FG18X7R1H152KNT0□
X7R	2.2nF	±10%	50	FG18X7R1H222KNT0□
X7R	3.3nF	±10%	50	FG18X7R1H332KNT0□
X7R	4.7nF	±10%	50	FG18X7R1H472KNT0□
X7R	6.8nF	±10%	50	FG18X7R1H682KNT0□
X7R	10nF	±10%	50	FG18X7R1H103KNT0□
X7R	15nF	±10%	50	FG18X7R1H153KNT0□
X7R	22nF	±10%	50	FG18X7R1H223KNT0□
X7R	33nF	±10%	50	FG18X7R1H333KNT0□
X7R	47nF	±10%	50	FG18X7R1H473KNT0□
X7R	68nF	±10%	50	FG18X7R1H683KNT0□
X7R	100nF	±10%	50	FG18X7R1H104KNT0□
X7R	150nF	±10%	50	FG18X7R1H154KRT0□
X7R	220nF	±10%	50	FG18X7R1H224KRT0□
X7R	330nF	±10%	50	FG18X7R1H334KRT0□
X7R	470nF	±10%	50	FG18X7R1H474KRT0□
X7R	1nF	±10%	100	FG18X7R2A102KNT0□
X7R	1.5nF	±10%	100	FG18X7R2A152KNT0□
X7R	2.2nF	±10%	100	FG18X7R2A222KNT0□
X7R	3.3nF	±10%	100	FG18X7R2A332KNT0□
X7R	4.7nF	±10%	100	FG18X7R2A472KNT0□
X7R	6.8nF	±10%	100	FG18X7R2A682KNT0□
X7R	10nF	±10%	100	FG18X7R2A103KNT0□
X7R	15nF	±10%	100	FG18X7R2A153KNT0□
X7R	22nF	±10%	100	FG18X7R2A223KNT0□
X7S	33nF	±10%	100	FG18X7S2A333KRT0□
X7S	47nF	±10%	100	FG18X7S2A473KRT0□
X7S	68nF	±10%	100	FG18X7S2A683KRT0□
X7S	100nF	±10%	100	FG18X7S2A104KRT0□

* The part numbers are TDK's standard specification products.

** The " □ " of the Part Number contains the packaging symbol, 0 (Bulk packaging) or 6 (Taping packaging).

⚠ Please be sure to request delivery specifications that provide further details on the features and specifications of the products for proper and safe use.
Please note that the contents may change without any prior notice due to reasons such as upgrading.

FG14 Type

SHAPE & DIMENSIONS

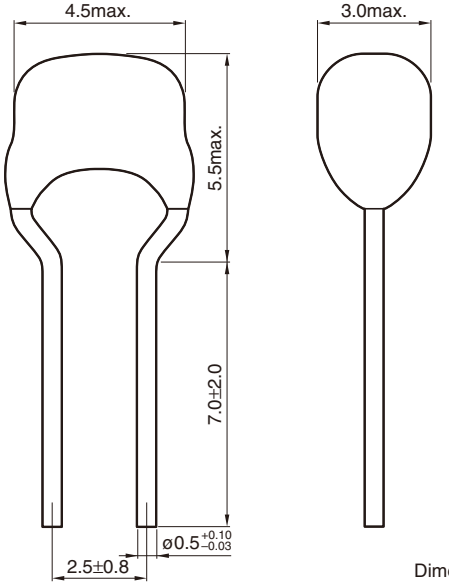

Dimensions in mm

⚠ Please be sure to request delivery specifications that provide further details on the features and specifications of the products for proper and safe use.
Please note that the contents may change without any prior notice due to reasons such as upgrading.

FG14 Type

■ELECTRICAL CHARACTERISTICS

□CHARACTERISTICS SPECIFICATION TABLE

CLASS 1 (TEMPERATURE COMPENSATION)

Temperature characteristics	Capacitance	Tolerance	Rated voltage Edc (V)	Part No.*
C0G	15nF	±5%	50	FG14C0G1H153JNT0□**
C0G	22nF	±5%	50	FG14C0G1H223JNT0□
C0G	33nF	±5%	50	FG14C0G1H333JNT0□
C0G	3.9nF	±5%	100	FG14C0G2A392JNT0□
C0G	4.7nF	±5%	100	FG14C0G2A472JNT0□
C0G	5.6nF	±5%	100	FG14C0G2A562JNT0□
C0G	6.8nF	±5%	100	FG14C0G2A682JNT0□
C0G	8.2nF	±5%	100	FG14C0G2A822JNT0□
C0G	10nF	±5%	100	FG14C0G2A103JNT0□

* The part numbers are TDK's standard specification products.

** The " □ " of the Part Number contains the packaging symbol, 0 (Bulk packaging) or 6 (Taping packaging).

CLASS 2 (TEMPERATURE STABLE)

Temperature characteristics	Capacitance	Tolerance	Rated voltage Edc (V)	Part No.*
X5R	15uF	±20%	25	FG14X5R1E156MRT0□**
X5R	22uF	±20%	25	FG14X5R1E226MRT0□
X5R	3.3uF	±10%	50	FG14X5R1H335KRT0□
X5R	4.7uF	±10%	50	FG14X5R1H475KRT0□
X7R	6.8uF	±10%	10	FG14X7R1A685KRT0□
X7R	10uF	±10%	10	FG14X7R1A106KRT0□
X7R	680nF	±10%	16	FG14X7R1C684KNT0□
X7R	470nF	±10%	25	FG14X7R1E474KNT0□
X7R	3.3uF	±10%	25	FG14X7R1E335KRT0□
X7R	4.7uF	±10%	25	FG14X7R1E475KRT0□
X7R	150nF	±10%	50	FG14X7R1H154KNT0□
X7R	220nF	±10%	50	FG14X7R1H224KNT0□
X7R	330nF	±10%	50	FG14X7R1H334KNT0□
X7R	680nF	±10%	50	FG14X7R1H684KRT0□
X7R	1uF	±10%	50	FG14X7R1H105KRT0□
X7R	1.5uF	±10%	50	FG14X7R1H155KRT0□
X7R	2.2uF	±10%	50	FG14X7R1H225KRT0□
X7R	33nF	±10%	100	FG14X7R2A333KNT0□
X7R	47nF	±10%	100	FG14X7R2A473KNT0□
X7R	68nF	±10%	100	FG14X7R2A683KNT0□
X7R	100nF	±10%	100	FG14X7R2A104KNT0□
X7S	150nF	±10%	100	FG14X7S2A154KRT0□
X7S	220nF	±10%	100	FG14X7S2A224KRT0□
X7S	330nF	±10%	100	FG14X7S2A334KRT0□
X7S	470nF	±10%	100	FG14X7S2A474KRT0□
X7S	680nF	±10%	100	FG14X7S2A684KRT0□
X7S	1uF	±10%	100	FG14X7S2A105KRT0□

* The part numbers are TDK's standard specification products.

** The " □ " of the Part Number contains the packaging symbol, 0 (Bulk packaging) or 6 (Taping packaging).

⚠ Please be sure to request delivery specifications that provide further details on the features and specifications of the products for proper and safe use.
Please note that the contents may change without any prior notice due to reasons such as upgrading.

FG16 Type

SHAPE & DIMENSIONS

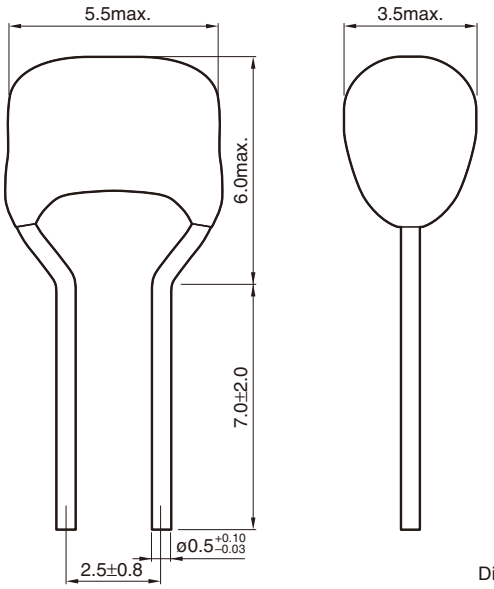

Dimensions in mm

⚠ Please be sure to request delivery specifications that provide further details on the features and specifications of the products for proper and safe use.
Please note that the contents may change without any prior notice due to reasons such as upgrading.

FG16 Type

■ELECTRICAL CHARACTERISTICS

□CHARACTERISTICS SPECIFICATION TABLE

CLASS 1 (TEMPERATURE COMPENSATION)

Temperature characteristics	Capacitance	Tolerance	Rated voltage Edc (V)	Part No.*
C0G	47nF	±5%	50	FG16C0G1H473JNT0□**
C0G	68nF	±5%	50	FG16C0G1H683JNT0□
C0G	100nF	±5%	50	FG16C0G1H104JNT0□
C0G	15nF	±5%	100	FG16C0G2A153JNT0□
C0G	22nF	±5%	100	FG16C0G2A223JNT0□
C0G	33nF	±5%	100	FG16C0G2A333JNT0□

* The part numbers are TDK's standard specification products.

** The " □ " of the Part Number contains the packaging symbol, 0 (Bulk packaging) or 6 (Taping packaging).

CLASS 2 (TEMPERATURE STABLE)

Temperature characteristics	Capacitance	Tolerance	Rated voltage Edc (V)	Part No.*
X5R	33uF	±20%	25	FG16X5R1E336MRT0□**
X5R	47uF	±20%	25	FG16X5R1E476MRT0□
X5R	6.8uF	±10%	50	FG16X5R1H685KRT0□
X5R	10uF	±10%	50	FG16X5R1H106KRT0□
X7R	1uF	±10%	25	FG16X7R1E105KNT0□
X7R	1.5uF	±10%	25	FG16X7R1E155KNT0□
X7R	2.2uF	±10%	25	FG16X7R1E225KNT0□
X7R	6.8uF	±10%	25	FG16X7R1E685KRT0□
X7R	10uF	±10%	25	FG16X7R1E106KRT0□
X7R	470nF	±10%	50	FG16X7R1H474KNT0□
X7R	680nF	±10%	50	FG16X7R1H684KNT0□
X7R	3.3uF	±10%	50	FG16X7R1H335KRT0□
X7R	4.7uF	±10%	50	FG16X7R1H475KRT0□
X7R	150nF	±10%	100	FG16X7R2A154KNT0□
X7R	220nF	±10%	100	FG16X7R2A224KNT0□
X7R	330nF	±10%	100	FG16X7R2A334KNT0□
X7R	470nF	±10%	100	FG16X7R2A474KNT0□
X7R	680nF	±10%	100	FG16X7R2A684KNT0□
X7R	1uF	±10%	100	FG16X7R2A105KNT0□
X7S	1.5uF	±10%	100	FG16X7S2A155KRT0□
X7S	2.2uF	±10%	100	FG16X7S2A225KRT0□
X7S	3.3uF	±10%	100	FG16X7S2A335KRT0□

* The part numbers are TDK's standard specification products.

** The " □ " of the Part Number contains the packaging symbol, 0 (Bulk packaging) or 6 (Taping packaging).

⚠ Please be sure to request delivery specifications that provide further details on the features and specifications of the products for proper and safe use.
Please note that the contents may change without any prior notice due to reasons such as upgrading.

FG11 Type

SHAPE & DIMENSIONS

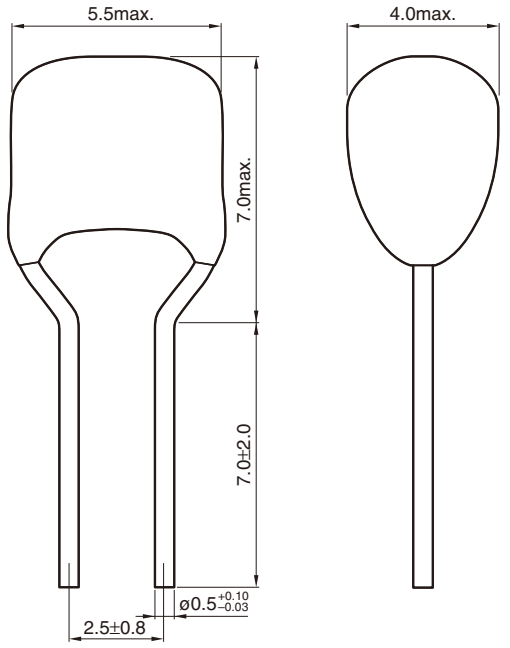

Dimensions in mm

⚠ Please be sure to request delivery specifications that provide further details on the features and specifications of the products for proper and safe use.
Please note that the contents may change without any prior notice due to reasons such as upgrading.

FG11 Type

■ELECTRICAL CHARACTERISTICS

□CHARACTERISTICS SPECIFICATION TABLE

CLASS 1 (TEMPERATURE COMPENSATION)

Temperature characteristics	Capacitance	Tolerance	Rated voltage Edc (V)	Part No.*
C0G	47nF	±5%	100	FG11C0G2A473JNT0□**
C0G	68nF	±5%	100	FG11C0G2A683JNT0□

* The part numbers are TDK's standard specification products.

** The " □ " of the Part Number contains the packaging symbol, 0 (Bulk packaging) or 6 (Taping packaging).

CLASS 2 (TEMPERATURE STABLE)

Temperature characteristics	Capacitance	Tolerance	Rated voltage Edc (V)	Part No.*
X5R	68uF	±20%	6.3	FG11X5R0J686MRT0□**
X5R	100uF	±20%	6.3	FG11X5R0J107MRT0□
X7R	15uF	±20%	16	FG11X7R1C156MRT0□
X7R	22uF	±20%	16	FG11X7R1C226MRT0□
X7R	3.3uF	±10%	25	FG11X7R1E335KNT0□
X7R	4.7uF	±10%	25	FG11X7R1E475KNT0□
X7R	1uF	±10%	50	FG11X7R1H105KNT0□
X7R	1.5uF	±10%	50	FG11X7R1H155KNT0□
X7R	10uF	±10%	50	FG11X7R1H106KRT0□
X7R	1.5uF	±10%	100	FG11X7R2A155KRT0□
X7R	2.2uF	±10%	100	FG11X7R2A225KRT0□
X7S	6.8uF	±10%	50	FG11X7S1H685KRT0□
X7S	10uF	±10%	50	FG11X7S1H106KRT0□
X7S	4.7uF	±10%	100	FG11X7S2A475KRT0□

* The part numbers are TDK's standard specification products.

** The " □ " of the Part Number contains the packaging symbol, 0 (Bulk packaging) or 6 (Taping packaging).

⚠ Please be sure to request delivery specifications that provide further details on the features and specifications of the products for proper and safe use.
Please note that the contents may change without any prior notice due to reasons such as upgrading.

Packaging Style

■TAPING DIMENSIONS

□Lead pitch 5.0 mm
(FG28, FG24, FG26, FG20, FG22 Type)

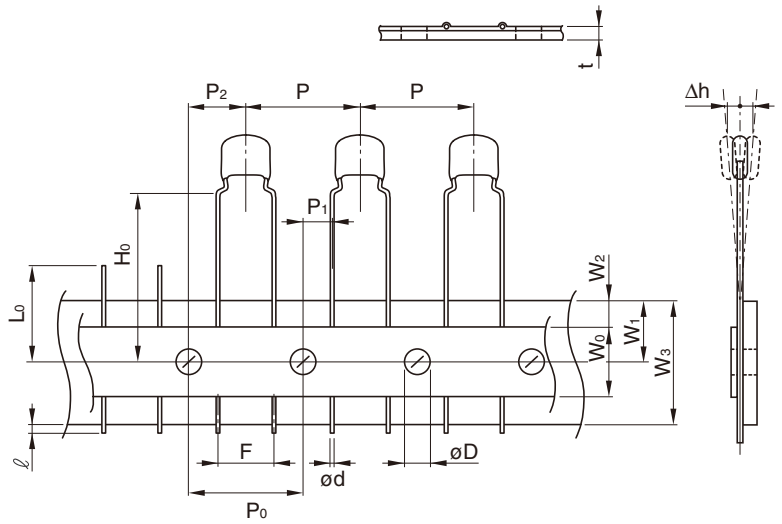

Symbol	Dimensions (mm)
P	12.7±1.0
P_0*1	12.7±0.3
P_1	3.85±0.7
P_2	6.35±1.3
W_0	12.0±1.0
W_1	9.0±0.5
W_2*2	3.0max.
W_3	18.0+1.0, –0.5
H_0	16.0±0.5
ℓ	1.0max.
t	0.6±0.2
L_0*3	11.0max.
F	5.0+0.8, –0.2
ød	ø0.5+0.1, –0.03
øD	ø4.0±0.2
Δh	0±2

*1 Accumulated pitch tolerance shall be ±2mm for 20 pitches.
*2 Adhesive tape shall not stick out from carrier tape.
*3 The number of consecutive gaps in the product shall be three or less.

□Lead pitch 2.5 mm
(FG18, FG14, FG16, FG11 Type)

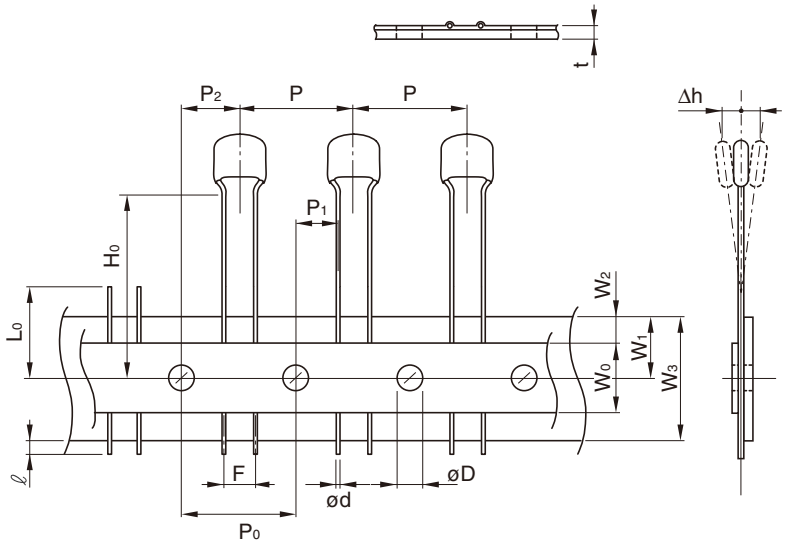

Symbol	Dimensions (mm)
P	12.7±1.0
P_0*1	12.7±0.3
P_1	5.1±0.7
P_2	6.35±1.3
W_0	12.0±1.0
W_1	9.0±0.5
W_2*2	3.0max.
W_3	18.0+1.0, –0.5
H_0	16.0±0.5
ℓ	1.0max.
t	0.6±0.2
L_0*3	11.0max.
F	2.5+0.5, –0.2
ød	ø0.5+0.1, –0.03
øD	ø4.0±0.2
Δh	0±2

*1 Accumulated pitch tolerance shall be ±2mm for 20 pitches.
*2 Adhesive tape shall not stick out from carrier tape.
*3 The number of consecutive gaps in the product shall be three or less.

■AMMO PACK INNER BOX SIZE

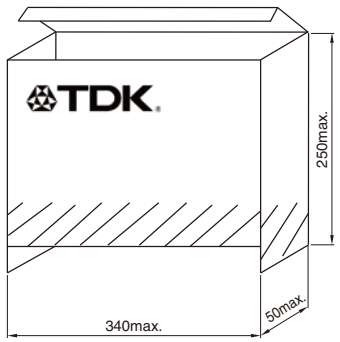

Dimensions in mm

⚠ Please be sure to request delivery specifications that provide further details on the features and specifications of the products for proper and safe use.
Please note that the contents may change without any prior notice due to reasons such as upgrading.