TDK

June 2015

# MLCC with Dipped Radial Lead

(Halogen-free, Commercial Grade)

# FG Series

**Type:**

**Lead pitch 5.0 mm**
**FG28 [4.0x5.5mm]**
**FG24 [4.5x5.5mm]**
**FG26 [5.5x6.0mm]**
**FG20 [5.5x7.0mm]**
**FG22 [7.5x8.5mm]**

**Lead pitch 2.5 mm**
**FG18 [4.0x5.5mm]**
**FG14 [4.5x5.5mm]**
**FG16 [5.5x6.0mm]**
**FG11 [5.5x7.0mm]**

# REMINDERS FOR USING THESE PRODUCTS

Before using these products, be sure to request the delivery specifications.

# SAFETY REMINDERS

Please pay sufficient attention to the warnings for safe designing when using these products.

## ⚠ REMINDERS

- Do not use or store in locations where there are conditions such as gas corrosion (salt, acid, alkali, etc.).
- Before soldering, be sure to preheat components.
  The preheating temperature should be set so that the temperature difference between the solder temperature and product temperature does not exceed 150°C.
- Soldering corrections after mounting should be within the range of the conditions determined in the specifications.
  If overheated, a short circuit, performance deterioration, or lifespan shortening may occur.
- Self heating (temperature increase) occurs when the power is turned ON, so the tolerance should be sufficient for the set thermal design.
- Do not use for a purpose outside of the contents regulated in the delivery specifications.
- The products listed on this catalog are intended for use in general electronic equipment (AV equipment, telecommunications equipment, home appliances, amusement equipment, computer equipment, personal equipment, office equipment, measurement equipment, industrial robots) under a normal operation and use condition.
  The products are not designed or warranted to meet the requirements of the applications listed below, whose performance and/or quality require a more stringent level of safety or reliability, or whose FGilure, malfunction or trouble could cause serious damage to society, person or property.
  If you intend to use the products in the applications listed below or if you have special requirements exceeding the range or conditions set forth in the each catalog, please contact us.

(1) Aerospace/Aviation equipment
(2) Transportation equipment (cars, electric trains, ships, etc.)
(3) Medical equipment
(4) Power-generation control equipment
(5) Atomic energy-related equipment
(6) Seabed equipment
(7) Transportation control equipment
(8) Public information-processing equipment
(9) Military equipment
(10) Electric heating apparatus, burning equipment
(11) Disaster prevention/crime prevention equipment
(12) Safety equipment
(13) Other applications that are not considered general-purpose applications

When designing your equipment even for general-purpose applications, you are kindly requested to take into consideration securing protection circuit/device or providing backup circuits in your equipment.

# MLCC with Dipped Radial Lead

## Halogen-free, Commercial Grade

**Product compatible with RoHS directive**
**Halogen-free**

# Overview of the FG Series

## FEATURES

- A complete lineup with a rated voltage of 6.3V to 630V.
- Compatible with a wide capacitance range of 1pF to 100μF.

## APPLICATION

- Noise reduction measures for various motors
- Bypass capacitors such as for switching power sources, smoothing capacitors, etc.
- Snubber circuits
- PFC input filters

## PART NUMBER CONSTRUCTION

| FG | 2 | 8 | C0G | 1H | 010 | C | □□□ | □ |
|---|---|---|---|---|---|---|---|---|
| Series name | Lead pitch (mm) | LxWxT Dimensions (mm) | Capacitance temperature characteristics | Rated voltage (V) | Nominal capacitance (pF) | Capacitance tolerance* | Internal code | Packaging Style** |

| Lead pitch (mm) | |
|---|---|
| 1 | 2.5 |
| 2 | 5.0 |

| LxWxT Dimensions (mm) | |
|---|---|
| 8 | 4.0x5.5x2.5 |
| 4 | 4.5x5.5x3.0 |
| 6 | 5.5x6.0x3.5 |
| 0 | 5.5x7.0x4.0 |
| 1 | 5.5x7.0x4.0 |
| 2 | 7.5x8.5x4.5 |

| Capacitance temperature characteristics | |
|---|---|
| C0G | 0±30ppm/°C |
| X5R | ±15% |
| X7R | ±15% |
| X7S | ±22% |
| X7T | +22, –33% |

| Rated voltage (V) | |
|---|---|
| 0J | 6.3 |
| 1A | 10 |
| 1C | 16 |
| 1E | 25 |
| 1H | 50 |
| 2A | 100 |
| 2E | 250 |
| 2W | 450 |
| 2J | 630 |

| Nominal capacitance (pF) | |
|---|---|
| 010 | 1 |
| 100 | 10 |
| 101 | 100 |
| 102 | 1,000 |

| Capacitance tolerance* | |
|---|---|
| C | ±0.25pF |
| D | ±0.5pF |
| J | ±5% |
| K | ±10% |
| M | ±20% |

| Packaging Style** | |
|---|---|
| 0 | Bulk |
| 6 | Taping |

* Applicable capacitance range: Max. 10 pF for C and D, over 10 pF for J, K, and M.
** Applied to the TDK's standard specification products.

## OPERATING TEMPERATURE RANGE

| Capacitance temperature characteristics | Temperature range | |
|---|---|---|
| | Operating temperature (°C) | Storage temperature* (°C) |
| C0G, X7R, X7S, X7T | –55 to +125 | –55 to +125 |
| X5R | –55 to +85 | –55 to +85 |

* The Storage temperature range is for after the circuit board is mounted.

- RoHS Directive Compliant Product: See the following for more details related to RoHS Directive compliant products. http://product.tdk.com/en/environment/rohs/
- Halogen-free: Indicates that Cl content is less than 900ppm, Br content is less than 900ppm, and that the total Cl and Br content is less than 1500ppm.

⚠ Please be sure to request delivery specifications that provide further details on the features and specifications of the products for proper and safe use.
Please note that the contents may change without any prior notice due to reasons such as upgrading.

# Overview of the FG Series

## PACKAGE QUANTITY

| Type | Package quantity | |
|---|---|---|
| | Taping (pieces / box) | Bulk (pieces / bag) |
| FG28 | 2000 | 500 |
| FG24 | 2000 | 500 |
| FG26 | 2000 | 500 |
| FG20 | 1500 | 500 |
| FG22 | 1000 | 500 |
| FG18 | 2000 | 500 |
| FG14 | 2000 | 500 |
| FG16 | 2000 | 500 |
| FG11 | 1500 | 500 |

⚠ Please be sure to request delivery specifications that provide further details on the features and specifications of the products for proper and safe use.
Please note that the contents may change without any prior notice due to reasons such as upgrading.

# Overview of the FG Series

## RECOMMENDED FLOW PROFILE

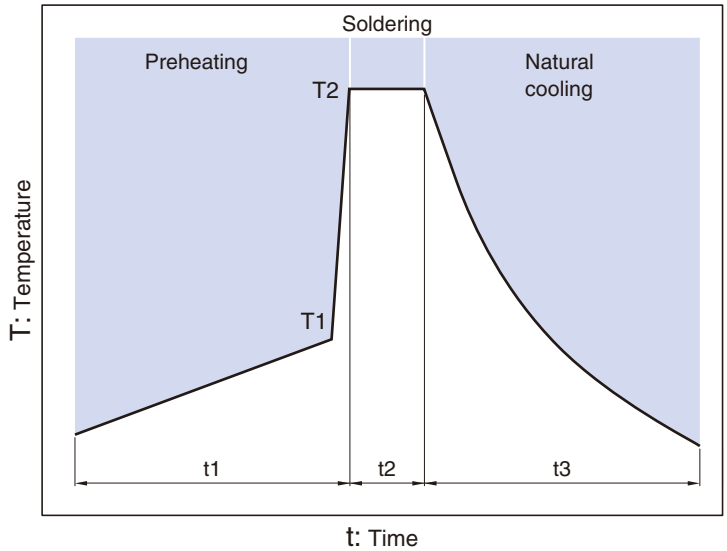


| Preheating | | Peak | | Natural cooling |
|---|---|---|---|---|
| **Temp.** | **Time** | **Temp.** | **Time** | **Time** |
| **T1** | **t1** | **T2** | **t2** | **t3** |
| 110°C min. | Over 60s. | 260°C | Within 5s. | Over 60s. |

⚠ Please be sure to request delivery specifications that provide further details on the features and specifications of the products for proper and safe use.
Please note that the contents may change without any prior notice due to reasons such as upgrading.

# FG28 Type

## SHAPE & DIMENSIONS

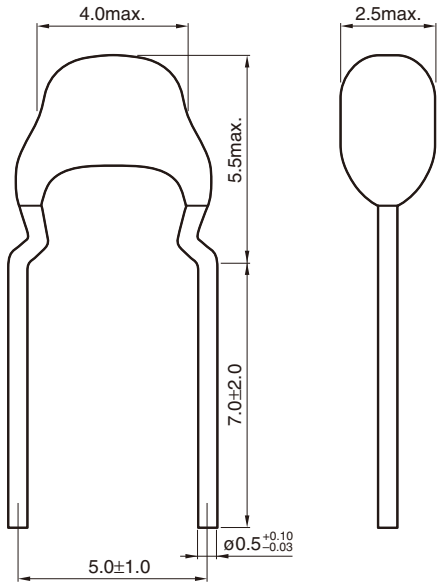


Dimensions in mm

⚠ Please be sure to request delivery specifications that provide further details on the features and specifications of the products for proper and safe use.
Please note that the contents may change without any prior notice due to reasons such as upgrading.

# FG28 Type

## ■ELECTRICAL CHARACTERISTICS

□CHARACTERISTICS SPECIFICATION TABLE

CLASS 1 (TEMPERATURE COMPENSATION)

| Temperature characteristics | Capacitance | Tolerance | Rated voltage Edc (V) | Part No.* |
|---|---|---|---|---|
| C0G | 1.0pF | ±0.25pF | 50 | FG28C0G1H010CNT0□** |
| C0G | 1.5pF | ±0.25pF | 50 | FG28C0G1H1R5CNT0□ |
| C0G | 2.0pF | ±0.25pF | 50 | FG28C0G1H020CNT0□ |
| C0G | 2.2pF | ±0.25pF | 50 | FG28C0G1H2R2CNT0□ |
| C0G | 3.0pF | ±0.25pF | 50 | FG28C0G1H030CNT0□ |
| C0G | 3.3pF | ±0.25pF | 50 | FG28C0G1H3R3CNT0□ |
| C0G | 4.0pF | ±0.25pF | 50 | FG28C0G1H040CNT0□ |
| C0G | 4.7pF | ±0.25pF | 50 | FG28C0G1H4R7CNT0□ |
| C0G | 5.0pF | ±0.25pF | 50 | FG28C0G1H050CNT0□ |
| C0G | 6.0pF | ±0.5pF | 50 | FG28C0G1H060DNT0□ |
| C0G | 6.8pF | ±0.5pF | 50 | FG28C0G1H6R8DNT0□ |
| C0G | 7.0pF | ±0.5pF | 50 | FG28C0G1H070DNT0□ |
| C0G | 8.0pF | ±0.5pF | 50 | FG28C0G1H080DNT0□ |
| C0G | 9.0pF | ±0.5pF | 50 | FG28C0G1H090DNT0□ |
| C0G | 10pF | ±0.5pF | 50 | FG28C0G1H100DNT0□ |
| C0G | 12pF | ±5% | 50 | FG28C0G1H120JNT0□ |
| C0G | 15pF | ±5% | 50 | FG28C0G1H150JNT0□ |
| C0G | 18pF | ±5% | 50 | FG28C0G1H180JNT0□ |
| C0G | 22pF | ±5% | 50 | FG28C0G1H220JNT0□ |
| C0G | 27pF | ±5% | 50 | FG28C0G1H270JNT0□ |
| C0G | 33pF | ±5% | 50 | FG28C0G1H330JNT0□ |
| C0G | 39pF | ±5% | 50 | FG28C0G1H390JNT0□ |
| C0G | 47pF | ±5% | 50 | FG28C0G1H470JNT0□ |
| C0G | 56pF | ±5% | 50 | FG28C0G1H560JNT0□ |
| C0G | 68pF | ±5% | 50 | FG28C0G1H680JNT0□ |
| C0G | 82pF | ±5% | 50 | FG28C0G1H820JNT0□ |
| C0G | 100pF | ±5% | 50 | FG28C0G1H101JNT0□ |
| C0G | 120pF | ±5% | 50 | FG28C0G1H121JNT0□ |
| C0G | 150pF | ±5% | 50 | FG28C0G1H151JNT0□ |
| C0G | 180pF | ±5% | 50 | FG28C0G1H181JNT0□ |
| C0G | 220pF | ±5% | 50 | FG28C0G1H221JNT0□ |
| C0G | 270pF | ±5% | 50 | FG28C0G1H271JNT0□ |
| C0G | 330pF | ±5% | 50 | FG28C0G1H331JNT0□ |
| C0G | 390pF | ±5% | 50 | FG28C0G1H391JNT0□ |
| C0G | 470pF | ±5% | 50 | FG28C0G1H471JNT0□ |
| C0G | 560pF | ±5% | 50 | FG28C0G1H561JNT0□ |
| C0G | 680pF | ±5% | 50 | FG28C0G1H681JNT0□ |
| C0G | 820pF | ±5% | 50 | FG28C0G1H821JNT0□ |
| C0G | 1nF | ±5% | 50 | FG28C0G1H102JNT0□ |
| C0G | 1.2nF | ±5% | 50 | FG28C0G1H122JNT0□ |
| C0G | 1.5nF | ±5% | 50 | FG28C0G1H152JNT0□ |
| C0G | 1.8nF | ±5% | 50 | FG28C0G1H182JNT0□ |
| C0G | 2.2nF | ±5% | 50 | FG28C0G1H222JNT0□ |
| C0G | 2.7nF | ±5% | 50 | FG28C0G1H272JNT0□ |
| C0G | 3.3nF | ±5% | 50 | FG28C0G1H332JNT0□ |
| C0G | 3.9nF | ±5% | 50 | FG28C0G1H392JNT0□ |
| C0G | 4.7nF | ±5% | 50 | FG28C0G1H472JNT0□ |
| C0G | 5.6nF | ±5% | 50 | FG28C0G1H562JNT0□ |
| C0G | 6.8nF | ±5% | 50 | FG28C0G1H682JNT0□ |
| C0G | 8.2nF | ±5% | 50 | FG28C0G1H822JNT0□ |

* The part numbers are TDK's standard specification products.

** The " □ " of the Part Number contains the packaging symbol, 0 (Bulk packaging) or 6 (Taping packaging).

⚠ Please be sure to request delivery specifications that provide further details on the features and specifications of the products for proper and safe use.
Please note that the contents may change without any prior notice due to reasons such as upgrading.

# FG28 Type

## ■ELECTRICAL CHARACTERISTICS

□CHARACTERISTICS SPECIFICATION TABLE

CLASS 1 (TEMPERATURE COMPENSATION)

| Temperature characteristics | Capacitance | Tolerance | Rated voltage Edc (V) | Part No.* |
|---|---|---|---|---|
| C0G | 10nF | ±5% | 50 | FG28C0G1H103JNT0□** |
| C0G | 1.0pF | ±0.25pF | 100 | FG28C0G2A010CNT0□ |
| C0G | 1.5pF | ±0.25pF | 100 | FG28C0G2A1R5CNT0□ |
| C0G | 2.0pF | ±0.25pF | 100 | FG28C0G2A020CNT0□ |
| C0G | 2.2pF | ±0.25pF | 100 | FG28C0G2A2R2CNT0□ |
| C0G | 3.0pF | ±0.25pF | 100 | FG28C0G2A030CNT0□ |
| C0G | 3.3pF | ±0.25pF | 100 | FG28C0G2A3R3CNT0□ |
| C0G | 4.0pF | ±0.25pF | 100 | FG28C0G2A040CNT0□ |
| C0G | 4.7pF | ±0.25pF | 100 | FG28C0G2A4R7CNT0□ |
| C0G | 5.0pF | ±0.25pF | 100 | FG28C0G2A050CNT0□ |
| C0G | 6.0pF | ±0.5pF | 100 | FG28C0G2A060DNT0□ |
| C0G | 6.8pF | ±0.5pF | 100 | FG28C0G2A6R8DNT0□ |
| C0G | 7.0pF | ±0.5pF | 100 | FG28C0G2A070DNT0□ |
| C0G | 8.0pF | ±0.5pF | 100 | FG28C0G2A080DNT0□ |
| C0G | 9.0pF | ±0.5pF | 100 | FG28C0G2A090DNT0□ |
| C0G | 10pF | ±0.5pF | 100 | FG28C0G2A100DNT0□ |
| C0G | 12pF | ±5% | 100 | FG28C0G2A120JNT0□ |
| C0G | 15pF | ±5% | 100 | FG28C0G2A150JNT0□ |
| C0G | 18pF | ±5% | 100 | FG28C0G2A180JNT0□ |
| C0G | 22pF | ±5% | 100 | FG28C0G2A220JNT0□ |
| C0G | 27pF | ±5% | 100 | FG28C0G2A270JNT0□ |
| C0G | 33pF | ±5% | 100 | FG28C0G2A330JNT0□ |
| C0G | 39pF | ±5% | 100 | FG28C0G2A390JNT0□ |
| C0G | 47pF | ±5% | 100 | FG28C0G2A470JNT0□ |
| C0G | 56pF | ±5% | 100 | FG28C0G2A560JNT0□ |
| C0G | 68pF | ±5% | 100 | FG28C0G2A680JNT0□ |
| C0G | 82pF | ±5% | 100 | FG28C0G2A820JNT0□ |
| C0G | 100pF | ±5% | 100 | FG28C0G2A101JNT0□ |
| C0G | 120pF | ±5% | 100 | FG28C0G2A121JNT0□ |
| C0G | 150pF | ±5% | 100 | FG28C0G2A151JNT0□ |
| C0G | 180pF | ±5% | 100 | FG28C0G2A181JNT0□ |
| C0G | 220pF | ±5% | 100 | FG28C0G2A221JNT0□ |
| C0G | 270pF | ±5% | 100 | FG28C0G2A271JNT0□ |
| C0G | 330pF | ±5% | 100 | FG28C0G2A331JNT0□ |
| C0G | 390pF | ±5% | 100 | FG28C0G2A391JNT0□ |
| C0G | 470pF | ±5% | 100 | FG28C0G2A471JNT0□ |
| C0G | 560pF | ±5% | 100 | FG28C0G2A561JNT0□ |
| C0G | 680pF | ±5% | 100 | FG28C0G2A681JNT0□ |
| C0G | 820pF | ±5% | 100 | FG28C0G2A821JNT0□ |
| C0G | 1nF | ±5% | 100 | FG28C0G2A102JNT0□ |
| C0G | 1.2nF | ±5% | 100 | FG28C0G2A122JNT0□ |
| C0G | 1.5nF | ±5% | 100 | FG28C0G2A152JNT0□ |
| C0G | 1.8nF | ±5% | 100 | FG28C0G2A182JNT0□ |
| C0G | 2.2nF | ±5% | 100 | FG28C0G2A222JNT0□ |
| C0G | 2.7nF | ±5% | 100 | FG28C0G2A272JNT0□ |
| C0G | 3.3nF | ±5% | 100 | FG28C0G2A332JNT0□ |
| C0G | 100pF | ±5% | 250 | FG28C0G2E101JNT0□ |
| C0G | 120pF | ±5% | 250 | FG28C0G2E121JNT0□ |
| C0G | 150pF | ±5% | 250 | FG28C0G2E151JNT0□ |
| C0G | 180pF | ±5% | 250 | FG28C0G2E181JNT0□ |
| C0G | 220pF | ±5% | 250 | FG28C0G2E221JNT0□ |

* The part numbers are TDK's standard specification products.

** The " □ " of the Part Number contains the packaging symbol, 0 (Bulk packaging) or 6 (Taping packaging).

⚠ Please be sure to request delivery specifications that provide further details on the features and specifications of the products for proper and safe use.
Please note that the contents may change without any prior notice due to reasons such as upgrading.

# FG28 Type

## ■ELECTRICAL CHARACTERISTICS

□CHARACTERISTICS SPECIFICATION TABLE

CLASS 1 (TEMPERATURE COMPENSATION)

| Temperature characteristics | Capacitance | Tolerance | Rated voltage Edc (V) | Part No.* |
|---|---|---|---|---|
| C0G | 270pF | ±5% | 250 | FG28C0G2E271JNT0□** |
| C0G | 330pF | ±5% | 250 | FG28C0G2E331JNT0□ |
| C0G | 390pF | ±5% | 250 | FG28C0G2E391JNT0□ |
| C0G | 470pF | ±5% | 250 | FG28C0G2E471JNT0□ |
| C0G | 560pF | ±5% | 250 | FG28C0G2E561JNT0□ |
| C0G | 680pF | ±5% | 250 | FG28C0G2E681JNT0□ |
| C0G | 820pF | ±5% | 250 | FG28C0G2E821JNT0□ |
| C0G | 1nF | ±5% | 250 | FG28C0G2E102JNT0□ |
| C0G | 1.2nF | ±5% | 250 | FG28C0G2E122JNT0□ |
| C0G | 1.5nF | ±5% | 250 | FG28C0G2E152JNT0□ |
| C0G | 1.8nF | ±5% | 250 | FG28C0G2E182JNT0□ |
| C0G | 2.2nF | ±5% | 250 | FG28C0G2E222JNT0□ |

* The part numbers are TDK's standard specification products.

** The " □ " of the Part Number contains the packaging symbol, 0 (Bulk packaging) or 6 (Taping packaging).

⚠ Please be sure to request delivery specifications that provide further details on the features and specifications of the products for proper and safe use.
Please note that the contents may change without any prior notice due to reasons such as upgrading.

# FG28 Type

## ■ELECTRICAL CHARACTERISTICS

□CHARACTERISTICS SPECIFICATION TABLE

CLASS 2 (TEMPERATURE STABLE)

| Temperature characteristics | Capacitance | Tolerance | Rated voltage Edc (V) | Part No.* |
|---|---|---|---|---|
| X5R | 1.5uF | ±10% | 25 | FG28X5R1E155KRT0□** |
| X5R | 2.2uF | ±10% | 25 | FG28X5R1E225KRT0□ |
| X5R | 3.3uF | ±10% | 25 | FG28X5R1E335KRT0□ |
| X5R | 4.7uF | ±10% | 25 | FG28X5R1E475KRT0□ |
| X5R | 6.8uF | ±10% | 25 | FG28X5R1E685KRT0□ |
| X5R | 10uF | ±10% | 25 | FG28X5R1E106KRT0□ |
| X5R | 680nF | ±10% | 50 | FG28X5R1H684KRT0□ |
| X5R | 1uF | ±10% | 50 | FG28X5R1H105KRT0□ |
| X7R | 1.5uF | ±10% | 10 | FG28X7R1A155KRT0□ |
| X7R | 2.2uF | ±10% | 10 | FG28X7R1A225KRT0□ |
| X7R | 150nF | ±10% | 25 | FG28X7R1E154KNT0□ |
| X7R | 680nF | ±10% | 25 | FG28X7R1E684KRT0□ |
| X7R | 1uF | ±10% | 25 | FG28X7R1E105KRT0□ |
| X7R | 1nF | ±10% | 50 | FG28X7R1H102KNT0□ |
| X7R | 1.5nF | ±10% | 50 | FG28X7R1H152KNT0□ |
| X7R | 2.2nF | ±10% | 50 | FG28X7R1H222KNT0□ |
| X7R | 3.3nF | ±10% | 50 | FG28X7R1H332KNT0□ |
| X7R | 4.7nF | ±10% | 50 | FG28X7R1H472KNT0□ |
| X7R | 6.8nF | ±10% | 50 | FG28X7R1H682KNT0□ |
| X7R | 10nF | ±10% | 50 | FG28X7R1H103KNT0□ |
| X7R | 15nF | ±10% | 50 | FG28X7R1H153KNT0□ |
| X7R | 22nF | ±10% | 50 | FG28X7R1H223KNT0□ |
| X7R | 33nF | ±10% | 50 | FG28X7R1H333KNT0□ |
| X7R | 47nF | ±10% | 50 | FG28X7R1H473KNT0□ |
| X7R | 68nF | ±10% | 50 | FG28X7R1H683KNT0□ |
| X7R | 100nF | ±10% | 50 | FG28X7R1H104KNT0□ |
| X7R | 150nF | ±10% | 50 | FG28X7R1H154KRT0□ |
| X7R | 220nF | ±10% | 50 | FG28X7R1H224KRT0□ |
| X7R | 330nF | ±10% | 50 | FG28X7R1H334KRT0□ |
| X7R | 470nF | ±10% | 50 | FG28X7R1H474KRT0□ |
| X7R | 1nF | ±10% | 100 | FG28X7R2A102KNT0□ |
| X7R | 1.5nF | ±10% | 100 | FG28X7R2A152KNT0□ |
| X7R | 2.2nF | ±10% | 100 | FG28X7R2A222KNT0□ |
| X7R | 3.3nF | ±10% | 100 | FG28X7R2A332KNT0□ |
| X7R | 4.7nF | ±10% | 100 | FG28X7R2A472KNT0□ |
| X7R | 6.8nF | ±10% | 100 | FG28X7R2A682KNT0□ |
| X7R | 10nF | ±10% | 100 | FG28X7R2A103KNT0□ |
| X7R | 15nF | ±10% | 100 | FG28X7R2A153KNT0□ |
| X7R | 22nF | ±10% | 100 | FG28X7R2A223KNT0□ |
| X7S | 33nF | ±10% | 100 | FG28X7S2A333KRT0□ |
| X7S | 47nF | ±10% | 100 | FG28X7S2A473KRT0□ |
| X7S | 68nF | ±10% | 100 | FG28X7S2A683KRT0□ |
| X7S | 100nF | ±10% | 100 | FG28X7S2A104KRT0□ |

* The part numbers are TDK's standard specification products.

** The " □ " of the Part Number contains the packaging symbol, 0 (Bulk packaging) or 6 (Taping packaging).

⚠ Please be sure to request delivery specifications that provide further details on the features and specifications of the products for proper and safe use.
Please note that the contents may change without any prior notice due to reasons such as upgrading.

# FG24 Type

## SHAPE & DIMENSIONS

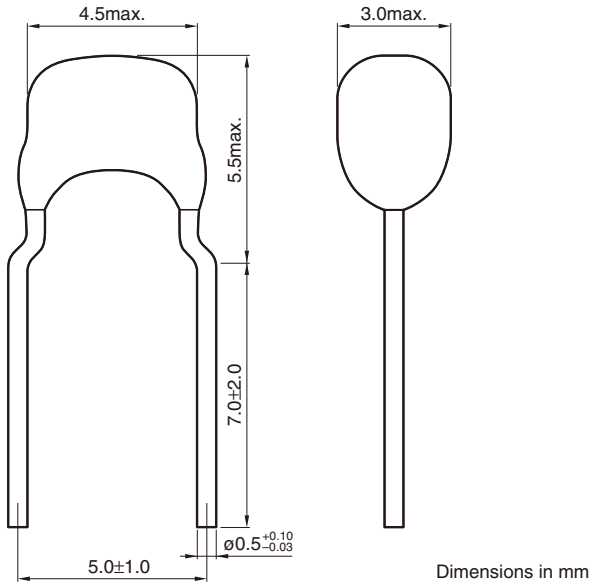


Dimensions in mm

⚠ Please be sure to request delivery specifications that provide further details on the features and specifications of the products for proper and safe use.
Please note that the contents may change without any prior notice due to reasons such as upgrading.

# FG24 Type

## ■ELECTRICAL CHARACTERISTICS

□CHARACTERISTICS SPECIFICATION TABLE

CLASS 1 (TEMPERATURE COMPENSATION)

| Temperature characteristics | Capacitance | Tolerance | Rated voltage Edc (V) | Part No.* |
|---|---|---|---|---|
| C0G | 15nF | ±5% | 50 | FG24C0G1H153JNT0□** |
| C0G | 22nF | ±5% | 50 | FG24C0G1H223JNT0□ |
| C0G | 33nF | ±5% | 50 | FG24C0G1H333JNT0□ |
| C0G | 3.9nF | ±5% | 100 | FG24C0G2A392JNT0□ |
| C0G | 4.7nF | ±5% | 100 | FG24C0G2A472JNT0□ |
| C0G | 5.6nF | ±5% | 100 | FG24C0G2A562JNT0□ |
| C0G | 6.8nF | ±5% | 100 | FG24C0G2A682JNT0□ |
| C0G | 8.2nF | ±5% | 100 | FG24C0G2A822JNT0□ |
| C0G | 10nF | ±5% | 100 | FG24C0G2A103JNT0□ |
| C0G | 2.7nF | ±5% | 250 | FG24C0G2E272JNT0□ |
| C0G | 3.3nF | ±5% | 250 | FG24C0G2E332JNT0□ |
| C0G | 3.9nF | ±5% | 250 | FG24C0G2E392JNT0□ |
| C0G | 4.7nF | ±5% | 250 | FG24C0G2E472JNT0□ |
| C0G | 5.6nF | ±5% | 250 | FG24C0G2E562JNT0□ |
| C0G | 6.8nF | ±5% | 250 | FG24C0G2E682JNT0□ |
| C0G | 8.2nF | ±5% | 250 | FG24C0G2E822JNT0□ |
| C0G | 10nF | ±5% | 250 | FG24C0G2E103JNT0□ |
| C0G | 100pF | ±5% | 450 | FG24C0G2W101JNT0□ |
| C0G | 120pF | ±5% | 450 | FG24C0G2W121JNT0□ |
| C0G | 150pF | ±5% | 450 | FG24C0G2W151JNT0□ |
| C0G | 180pF | ±5% | 450 | FG24C0G2W181JNT0□ |
| C0G | 220pF | ±5% | 450 | FG24C0G2W221JNT0□ |
| C0G | 270pF | ±5% | 450 | FG24C0G2W271JNT0□ |
| C0G | 330pF | ±5% | 450 | FG24C0G2W331JNT0□ |
| C0G | 390pF | ±5% | 450 | FG24C0G2W391JNT0□ |
| C0G | 470pF | ±5% | 450 | FG24C0G2W471JNT0□ |
| C0G | 560pF | ±5% | 450 | FG24C0G2W561JNT0□ |
| C0G | 680pF | ±5% | 450 | FG24C0G2W681JNT0□ |
| C0G | 820pF | ±5% | 450 | FG24C0G2W821JNT0□ |
| C0G | 1nF | ±5% | 450 | FG24C0G2W102JNT0□ |
| C0G | 1.2nF | ±5% | 450 | FG24C0G2W122JNT0□ |
| C0G | 1.5nF | ±5% | 450 | FG24C0G2W152JNT0□ |
| C0G | 1.8nF | ±5% | 450 | FG24C0G2W182JNT0□ |
| C0G | 2.2nF | ±5% | 450 | FG24C0G2W222JNT0□ |
| C0G | 2.7nF | ±5% | 450 | FG24C0G2W272JNT0□ |
| C0G | 3.3nF | ±5% | 450 | FG24C0G2W332JNT0□ |
| C0G | 3.9nF | ±5% | 450 | FG24C0G2W392JNT0□ |
| C0G | 4.7nF | ±5% | 450 | FG24C0G2W472JNT0□ |
| C0G | 5.6nF | ±5% | 450 | FG24C0G2W562JNT0□ |

* The part numbers are TDK's standard specification products.

** The " □ " of the Part Number contains the packaging symbol, 0 (Bulk packaging) or 6 (Taping packaging).

⚠ Please be sure to request delivery specifications that provide further details on the features and specifications of the products for proper and safe use.
Please note that the contents may change without any prior notice due to reasons such as upgrading.

# FG24 Type

## ■ELECTRICAL CHARACTERISTICS

□CHARACTERISTICS SPECIFICATION TABLE

CLASS 2 (TEMPERATURE STABLE)

| Temperature characteristics | Capacitance | Tolerance | Rated voltage Edc (V) | Part No.* |
|---|---|---|---|---|
| X5R | 15uF | ±20% | 25 | FG24X5R1E156MRT0□** |
| X5R | 22uF | ±20% | 25 | FG24X5R1E226MRT0□ |
| X5R | 3.3uF | ±10% | 50 | FG24X5R1H335KRT0□ |
| X5R | 4.7uF | ±10% | 50 | FG24X5R1H475KRT0□ |
| X7R | 6.8uF | ±10% | 10 | FG24X7R1A685KRT0□ |
| X7R | 10uF | ±10% | 10 | FG24X7R1A106KRT0□ |
| X7R | 680nF | ±10% | 16 | FG24X7R1C684KNT0□ |
| X7R | 470nF | ±10% | 25 | FG24X7R1E474KNT0□ |
| X7R | 3.3uF | ±10% | 25 | FG24X7R1E335KRT0□ |
| X7R | 4.7uF | ±10% | 25 | FG24X7R1E475KRT0□ |
| X7R | 150nF | ±10% | 50 | FG24X7R1H154KNT0□ |
| X7R | 220nF | ±10% | 50 | FG24X7R1H224KNT0□ |
| X7R | 330nF | ±10% | 50 | FG24X7R1H334KNT0□ |
| X7R | 680nF | ±10% | 50 | FG24X7R1H684KRT0□ |
| X7R | 1uF | ±10% | 50 | FG24X7R1H105KRT0□ |
| X7R | 1.5uF | ±10% | 50 | FG24X7R1H155KRT0□ |
| X7R | 2.2uF | ±10% | 50 | FG24X7R1H225KRT0□ |
| X7R | 33nF | ±10% | 100 | FG24X7R2A333KNT0□ |
| X7R | 47nF | ±10% | 100 | FG24X7R2A473KNT0□ |
| X7R | 68nF | ±10% | 100 | FG24X7R2A683KNT0□ |
| X7R | 100nF | ±10% | 100 | FG24X7R2A104KNT0□ |
| X7R | 1nF | ±10% | 250 | FG24X7R2E102KNT0□ |
| X7R | 1.5nF | ±10% | 250 | FG24X7R2E152KNT0□ |
| X7R | 2.2nF | ±10% | 250 | FG24X7R2E222KNT0□ |
| X7R | 3.3nF | ±10% | 250 | FG24X7R2E332KNT0□ |
| X7R | 4.7nF | ±10% | 250 | FG24X7R2E472KNT0□ |
| X7R | 6.8nF | ±10% | 250 | FG24X7R2E682KNT0□ |
| X7R | 10nF | ±10% | 250 | FG24X7R2E103KNT0□ |
| X7R | 15nF | ±10% | 250 | FG24X7R2E153KNT0□ |
| X7R | 22nF | ±10% | 250 | FG24X7R2E223KNT0□ |
| X7S | 150nF | ±10% | 100 | FG24X7S2A154KRT0□ |
| X7S | 220nF | ±10% | 100 | FG24X7S2A224KRT0□ |
| X7S | 330nF | ±10% | 100 | FG24X7S2A334KRT0□ |
| X7S | 470nF | ±10% | 100 | FG24X7S2A474KRT0□ |
| X7S | 680nF | ±10% | 100 | FG24X7S2A684KRT0□ |
| X7S | 1uF | ±10% | 100 | FG24X7S2A105KRT0□ |
| X7T | 33nF | ±10% | 250 | FG24X7T2E333KNT0□ |
| X7T | 47nF | ±10% | 250 | FG24X7T2E473KNT0□ |
| X7T | 68nF | ±10% | 250 | FG24X7T2E683KNT0□ |
| X7T | 100nF | ±10% | 250 | FG24X7T2E104KNT0□ |

* The part numbers are TDK's standard specification products.

** The " □ " of the Part Number contains the packaging symbol, 0 (Bulk packaging) or 6 (Taping packaging).

⚠ Please be sure to request delivery specifications that provide further details on the features and specifications of the products for proper and safe use.
Please note that the contents may change without any prior notice due to reasons such as upgrading.

# FG26 Type

## SHAPE & DIMENSIONS

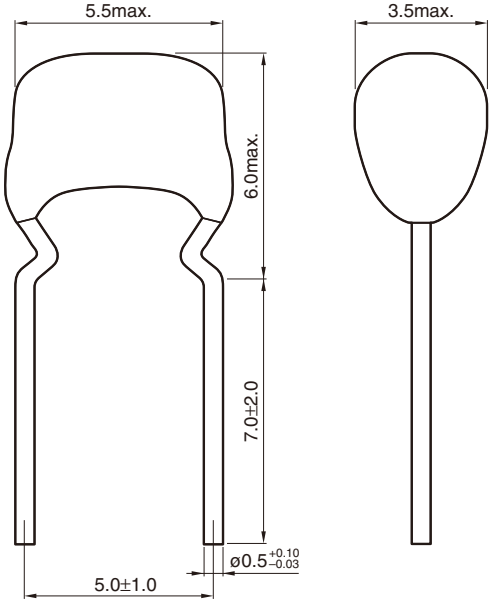


Dimensions in mm

⚠ Please be sure to request delivery specifications that provide further details on the features and specifications of the products for proper and safe use.
Please note that the contents may change without any prior notice due to reasons such as upgrading.

# FG26 Type

## ■ELECTRICAL CHARACTERISTICS

□CHARACTERISTICS SPECIFICATION TABLE

CLASS 1 (TEMPERATURE COMPENSATION)

| Temperature characteristics | Capacitance | Tolerance | Rated voltage Edc (V) | Part No.* |
|---|---|---|---|---|
| C0G | 47nF | ±5% | 50 | FG26C0G1H473JNT0□** |
| C0G | 68nF | ±5% | 50 | FG26C0G1H683JNT0□ |
| C0G | 100nF | ±5% | 50 | FG26C0G1H104JNT0□ |
| C0G | 15nF | ±5% | 100 | FG26C0G2A153JNT0□ |
| C0G | 22nF | ±5% | 100 | FG26C0G2A223JNT0□ |
| C0G | 33nF | ±5% | 100 | FG26C0G2A333JNT0□ |
| C0G | 15nF | ±5% | 250 | FG26C0G2E153JNT0□ |
| C0G | 22nF | ±5% | 250 | FG26C0G2E223JNT0□ |
| C0G | 6.8nF | ±5% | 450 | FG26C0G2W682JNT0□ |
| C0G | 8.2nF | ±5% | 450 | FG26C0G2W822JNT0□ |
| C0G | 10nF | ±5% | 450 | FG26C0G2W103JNT0□ |
| C0G | 15nF | ±5% | 450 | FG26C0G2W153JNT0□ |
| C0G | 100pF | ±5% | 630 | FG26C0G2J101JNT0□ |
| C0G | 120pF | ±5% | 630 | FG26C0G2J121JNT0□ |
| C0G | 150pF | ±5% | 630 | FG26C0G2J151JNT0□ |
| C0G | 180pF | ±5% | 630 | FG26C0G2J181JNT0□ |
| C0G | 220pF | ±5% | 630 | FG26C0G2J221JNT0□ |
| C0G | 270pF | ±5% | 630 | FG26C0G2J271JNT0□ |
| C0G | 330pF | ±5% | 630 | FG26C0G2J331JNT0□ |
| C0G | 390pF | ±5% | 630 | FG26C0G2J391JNT0□ |
| C0G | 470pF | ±5% | 630 | FG26C0G2J471JNT0□ |
| C0G | 560pF | ±5% | 630 | FG26C0G2J561JNT0□ |
| C0G | 680pF | ±5% | 630 | FG26C0G2J681JNT0□ |
| C0G | 820pF | ±5% | 630 | FG26C0G2J821JNT0□ |
| C0G | 1nF | ±5% | 630 | FG26C0G2J102JNT0□ |
| C0G | 1.2nF | ±5% | 630 | FG26C0G2J122JNT0□ |
| C0G | 1.5nF | ±5% | 630 | FG26C0G2J152JNT0□ |
| C0G | 1.8nF | ±5% | 630 | FG26C0G2J182JNT0□ |
| C0G | 2.2nF | ±5% | 630 | FG26C0G2J222JNT0□ |
| C0G | 2.7nF | ±5% | 630 | FG26C0G2J272JNT0□ |
| C0G | 3.3nF | ±5% | 630 | FG26C0G2J332JNT0□ |
| C0G | 3.9nF | ±5% | 630 | FG26C0G2J392JNT0□ |
| C0G | 4.7nF | ±5% | 630 | FG26C0G2J472JNT0□ |
| C0G | 5.6nF | ±5% | 630 | FG26C0G2J562JNT0□ |
| C0G | 6.8nF | ±5% | 630 | FG26C0G2J682JNT0□ |
| C0G | 8.2nF | ±5% | 630 | FG26C0G2J822JNT0□ |
| C0G | 10nF | ±5% | 630 | FG26C0G2J103JNT0□ |

* The part numbers are TDK's standard specification products.

** The " □ " of the Part Number contains the packaging symbol, 0 (Bulk packaging) or 6 (Taping packaging).

⚠ Please be sure to request delivery specifications that provide further details on the features and specifications of the products for proper and safe use.
Please note that the contents may change without any prior notice due to reasons such as upgrading.

# FG26 Type

## ■ELECTRICAL CHARACTERISTICS

□CHARACTERISTICS SPECIFICATION TABLE

CLASS 2 (TEMPERATURE STABLE)

| Temperature characteristics | Capacitance | Tolerance | Rated voltage Edc (V) | Part No.* |
|---|---|---|---|---|
| X5R | 33uF | ±20% | 25 | FG26X5R1E336MRT0□** |
| X5R | 47uF | ±20% | 25 | FG26X5R1E476MRT0□ |
| X5R | 6.8uF | ±10% | 50 | FG26X5R1H685KRT0□ |
| X5R | 10uF | ±10% | 50 | FG26X5R1H106KRT0□ |
| X7R | 1uF | ±10% | 25 | FG26X7R1E105KNT0□ |
| X7R | 1.5uF | ±10% | 25 | FG26X7R1E155KNT0□ |
| X7R | 2.2uF | ±10% | 25 | FG26X7R1E225KNT0□ |
| X7R | 6.8uF | ±10% | 25 | FG26X7R1E685KRT0□ |
| X7R | 10uF | ±10% | 25 | FG26X7R1E106KRT0□ |
| X7R | 470nF | ±10% | 50 | FG26X7R1H474KNT0□ |
| X7R | 680nF | ±10% | 50 | FG26X7R1H684KNT0□ |
| X7R | 3.3uF | ±10% | 50 | FG26X7R1H335KRT0□ |
| X7R | 4.7uF | ±10% | 50 | FG26X7R1H475KRT0□ |
| X7R | 150nF | ±10% | 100 | FG26X7R2A154KNT0□ |
| X7R | 220nF | ±10% | 100 | FG26X7R2A224KNT0□ |
| X7R | 330nF | ±10% | 100 | FG26X7R2A334KNT0□ |
| X7R | 470nF | ±10% | 100 | FG26X7R2A474KNT0□ |
| X7R | 680nF | ±10% | 100 | FG26X7R2A684KNT0□ |
| X7R | 1uF | ±10% | 100 | FG26X7R2A105KNT0□ |
| X7R | 33nF | ±10% | 250 | FG26X7R2E333KNT0□ |
| X7R | 47nF | ±10% | 250 | FG26X7R2E473KNT0□ |
| X7R | 68nF | ±10% | 250 | FG26X7R2E683KNT0□ |
| X7R | 100nF | ±10% | 250 | FG26X7R2E104KNT0□ |
| X7R | 1nF | ±10% | 630 | FG26X7R2J102KNT0□ |
| X7R | 1.5nF | ±10% | 630 | FG26X7R2J152KNT0□ |
| X7R | 2.2nF | ±10% | 630 | FG26X7R2J222KNT0□ |
| X7R | 3.3nF | ±10% | 630 | FG26X7R2J332KNT0□ |
| X7R | 4.7nF | ±10% | 630 | FG26X7R2J472KNT0□ |
| X7R | 6.8nF | ±10% | 630 | FG26X7R2J682KNT0□ |
| X7R | 10nF | ±10% | 630 | FG26X7R2J103KNT0□ |
| X7R | 15nF | ±10% | 630 | FG26X7R2J153KNT0□ |
| X7R | 22nF | ±10% | 630 | FG26X7R2J223KNT0□ |
| X7R | 33nF | ±10% | 630 | FG26X7R2J333KNT0□ |
| X7S | 1.5uF | ±10% | 100 | FG26X7S2A155KRT0□ |
| X7S | 2.2uF | ±10% | 100 | FG26X7S2A225KRT0□ |
| X7S | 3.3uF | ±10% | 100 | FG26X7S2A335KRT0□ |
| X7T | 150nF | ±10% | 250 | FG26X7T2E154KNT0□ |
| X7T | 220nF | ±10% | 250 | FG26X7T2E224KNT0□ |

* The part numbers are TDK's standard specification products.

** The " □ " of the Part Number contains the packaging symbol, 0 (Bulk packaging) or 6 (Taping packaging).

⚠ Please be sure to request delivery specifications that provide further details on the features and specifications of the products for proper and safe use.
Please note that the contents may change without any prior notice due to reasons such as upgrading.

# FG20 Type

## SHAPE & DIMENSIONS

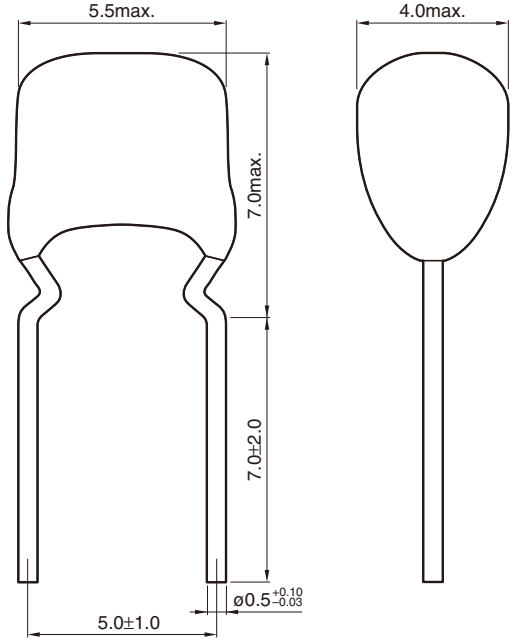


Dimensions in mm

# FG20 Type

## ■ELECTRICAL CHARACTERISTICS

□CHARACTERISTICS SPECIFICATION TABLE

CLASS 1 (TEMPERATURE COMPENSATION)

| Temperature characteristics | Capacitance | Tolerance | Rated voltage Edc (V) | Part No.* |
|---|---|---|---|---|
| C0G | 47nF | ±5% | 100 | FG20C0G2A473JNT0□** |
| C0G | 68nF | ±5% | 100 | FG20C0G2A683JNT0□ |
| C0G | 33nF | ±5% | 250 | FG20C0G2E333JNT0□ |
| C0G | 47nF | ±5% | 250 | FG20C0G2E473JNT0□ |
| C0G | 22nF | ±5% | 450 | FG20C0G2W223JNT0□ |
| C0G | 33nF | ±5% | 450 | FG20C0G2W333JNT0□ |
| C0G | 15nF | ±5% | 630 | FG20C0G2J153JNT0□ |
| C0G | 22nF | ±5% | 630 | FG20C0G2J223JNT0□ |
| C0G | 33nF | ±5% | 630 | FG20C0G2J333JNT0□ |

* The part numbers are TDK's standard specification products.

** The " □ " of the Part Number contains the packaging symbol, 0 (Bulk packaging) or 6 (Taping packaging).

CLASS 2 (TEMPERATURE STABLE)

| Temperature characteristics | Capacitance | Tolerance | Rated voltage Edc (V) | Part No.* |
|---|---|---|---|---|
| X5R | 68uF | ±20% | 6.3 | FG20X5R0J686MRT0□** |
| X5R | 100uF | ±20% | 6.3 | FG20X5R0J107MRT0□ |
| X7R | 15uF | ±20% | 16 | FG20X7R1C156MRT0□ |
| X7R | 22uF | ±20% | 16 | FG20X7R1C226MRT0□ |
| X7R | 3.3uF | ±10% | 25 | FG20X7R1E335KNT0□ |
| X7R | 4.7uF | ±10% | 25 | FG20X7R1E475KNT0□ |
| X7R | 1uF | ±10% | 50 | FG20X7R1H105KNT0□ |
| X7R | 1.5uF | ±10% | 50 | FG20X7R1H155KNT0□ |
| X7R | 10uF | ±10% | 50 | FG20X7R1H106KRT0□ |
| X7R | 1.5uF | ±10% | 100 | FG20X7R2A155KRT0□ |
| X7R | 2.2uF | ±10% | 100 | FG20X7R2A225KRT0□ |
| X7R | 150nF | ±10% | 250 | FG20X7R2E154KNT0□ |
| X7R | 220nF | ±10% | 250 | FG20X7R2E224KNT0□ |
| X7R | 47nF | ±10% | 630 | FG20X7R2J473KNT0□ |
| X7R | 68nF | ±10% | 630 | FG20X7R2J683KNT0□ |
| X7S | 6.8uF | ±10% | 50 | FG20X7S1H685KRT0□ |
| X7S | 10uF | ±10% | 50 | FG20X7S1H106KRT0□ |
| X7S | 4.7uF | ±10% | 100 | FG20X7S2A475KRT0□ |
| X7T | 330nF | ±10% | 250 | FG20X7T2E334KNT0□ |

* The part numbers are TDK's standard specification products.

** The " □ " of the Part Number contains the packaging symbol, 0 (Bulk packaging) or 6 (Taping packaging).

⚠ Please be sure to request delivery specifications that provide further details on the features and specifications of the products for proper and safe use.
Please note that the contents may change without any prior notice due to reasons such as upgrading.

# FG22 Type

## SHAPE & DIMENSIONS

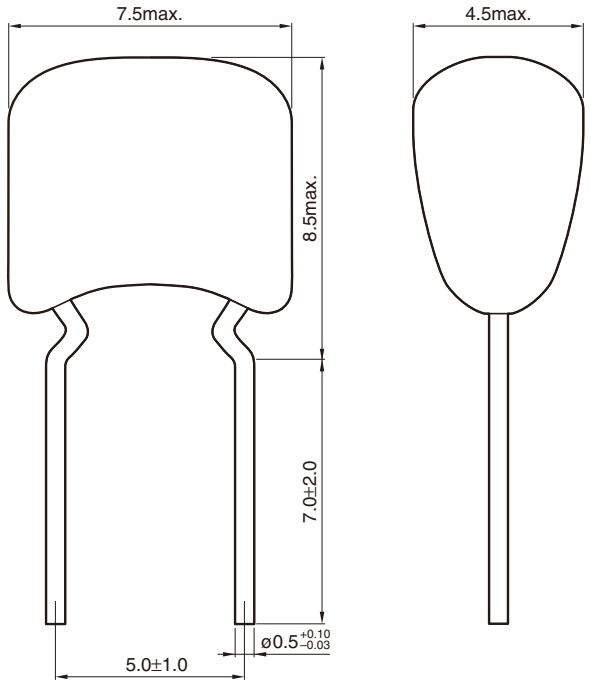


Dimensions in mm

⚠ Please be sure to request delivery specifications that provide further details on the features and specifications of the products for proper and safe use.
Please note that the contents may change without any prior notice due to reasons such as upgrading.

# FG22 Type

## ■ELECTRICAL CHARACTERISTICS

□CHARACTERISTICS SPECIFICATION TABLE

CLASS 1 (TEMPERATURE COMPENSATION)

| Temperature characteristics | Capacitance | Tolerance | Rated voltage Edc (V) | Part No.* |
|---|---|---|---|---|
| C0G | 150nF | ±5% | 50 | FG22C0G1H154JNT0□** |
| C0G | 220nF | ±5% | 50 | FG22C0G1H224JNT0□ |
| C0G | 100nF | ±5% | 100 | FG22C0G2A104JNT0□ |
| C0G | 68nF | ±5% | 250 | FG22C0G2E683JRT0□ |
| C0G | 100nF | ±5% | 250 | FG22C0G2E104JRT0□ |
| C0G | 47nF | ±5% | 450 | FG22C0G2W473JNT0□ |
| C0G | 68nF | ±5% | 450 | FG22C0G2W683JNT0□ |
| C0G | 47nF | ±5% | 630 | FG22C0G2J473JNT0□ |

* The part numbers are TDK's standard specification products.

** The " □ " of the Part Number contains the packaging symbol, 0 (Bulk packaging) or 6 (Taping packaging).

CLASS 2 (TEMPERATURE STABLE)

| Temperature characteristics | Capacitance | Tolerance | Rated voltage Edc (V) | Part No.* |
|---|---|---|---|---|
| X5R | 47uF | ±20% | 10 | FG22X5R1A476MNT0□** |
| X5R | 33uF | ±20% | 16 | FG22X5R1C336MNT0□ |
| X7R | 33uF | ±20% | 16 | FG22X7R1C336MRT0□ |
| X7R | 10uF | ±10% | 25 | FG22X7R1E106KNT0□ |
| X7R | 15uF | ±20% | 25 | FG22X7R1E156MRT0□ |
| X7R | 22uF | ±20% | 25 | FG22X7R1E226MRT0□ |
| X7R | 2.2uF | ±10% | 50 | FG22X7R1H225KNT0□ |
| X7R | 3.3uF | ±10% | 50 | FG22X7R1H335KNT0□ |
| X7R | 6.8uF | ±10% | 50 | FG22X7R1H685KRT0□ |
| X7R | 1.5uF | ±10% | 100 | FG22X7R2A155KNT0□ |
| X7R | 2.2uF | ±10% | 100 | FG22X7R2A225KNT0□ |
| X7R | 330nF | ±10% | 250 | FG22X7R2E334KNT0□ |
| X7R | 470nF | ±10% | 250 | FG22X7R2E474KNT0□ |
| X7R | 100nF | ±10% | 630 | FG22X7R2J104KNT0□ |
| X7T | 680nF | ±10% | 250 | FG22X7T2E684KNT0□ |
| X7T | 1uF | ±10% | 250 | FG22X7T2E105KNT0□ |

* The part numbers are TDK's standard specification products.

** The " □ " of the Part Number contains the packaging symbol, 0 (Bulk packaging) or 6 (Taping packaging).

⚠ Please be sure to request delivery specifications that provide further details on the features and specifications of the products for proper and safe use.
Please note that the contents may change without any prior notice due to reasons such as upgrading.

# FG18 Type

## SHAPE & DIMENSIONS

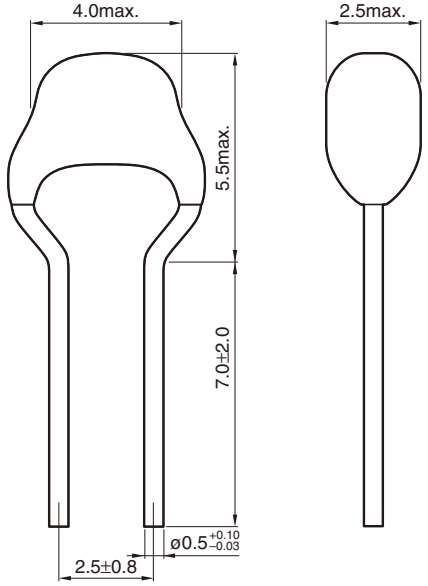


Dimensions in mm

⚠ Please be sure to request delivery specifications that provide further details on the features and specifications of the products for proper and safe use.
Please note that the contents may change without any prior notice due to reasons such as upgrading.

# FG18 Type

## ■ELECTRICAL CHARACTERISTICS

□CHARACTERISTICS SPECIFICATION TABLE

CLASS 1 (TEMPERATURE COMPENSATION)

| Temperature characteristics | Capacitance | Tolerance | Rated voltage Edc (V) | Part No.* |
|---|---|---|---|---|
| C0G | 1.0pF | ±0.25pF | 50 | FG18C0G1H010CNT0□** |
| C0G | 1.5pF | ±0.25pF | 50 | FG18C0G1H1R5CNT0□ |
| C0G | 2.0pF | ±0.25pF | 50 | FG18C0G1H020CNT0□ |
| C0G | 2.2pF | ±0.25pF | 50 | FG18C0G1H2R2CNT0□ |
| C0G | 3.0pF | ±0.25pF | 50 | FG18C0G1H030CNT0□ |
| C0G | 3.3pF | ±0.25pF | 50 | FG18C0G1H3R3CNT0□ |
| C0G | 4.0pF | ±0.25pF | 50 | FG18C0G1H040CNT0□ |
| C0G | 4.7pF | ±0.25pF | 50 | FG18C0G1H4R7CNT0□ |
| C0G | 5.0pF | ±0.25pF | 50 | FG18C0G1H050CNT0□ |
| C0G | 6.0pF | ±0.5pF | 50 | FG18C0G1H060DNT0□ |
| C0G | 6.8pF | ±0.5pF | 50 | FG18C0G1H6R8DNT0□ |
| C0G | 7.0pF | ±0.5pF | 50 | FG18C0G1H070DNT0□ |
| C0G | 8.0pF | ±0.5pF | 50 | FG18C0G1H080DNT0□ |
| C0G | 9.0pF | ±0.5pF | 50 | FG18C0G1H090DNT0□ |
| C0G | 10pF | ±0.5pF | 50 | FG18C0G1H100DNT0□ |
| C0G | 12pF | ±5% | 50 | FG18C0G1H120JNT0□ |
| C0G | 15pF | ±5% | 50 | FG18C0G1H150JNT0□ |
| C0G | 18pF | ±5% | 50 | FG18C0G1H180JNT0□ |
| C0G | 22pF | ±5% | 50 | FG18C0G1H220JNT0□ |
| C0G | 27pF | ±5% | 50 | FG18C0G1H270JNT0□ |
| C0G | 33pF | ±5% | 50 | FG18C0G1H330JNT0□ |
| C0G | 39pF | ±5% | 50 | FG18C0G1H390JNT0□ |
| C0G | 47pF | ±5% | 50 | FG18C0G1H470JNT0□ |
| C0G | 56pF | ±5% | 50 | FG18C0G1H560JNT0□ |
| C0G | 68pF | ±5% | 50 | FG18C0G1H680JNT0□ |
| C0G | 82pF | ±5% | 50 | FG18C0G1H820JNT0□ |
| C0G | 100pF | ±5% | 50 | FG18C0G1H101JNT0□ |
| C0G | 120pF | ±5% | 50 | FG18C0G1H121JNT0□ |
| C0G | 150pF | ±5% | 50 | FG18C0G1H151JNT0□ |
| C0G | 180pF | ±5% | 50 | FG18C0G1H181JNT0□ |
| C0G | 220pF | ±5% | 50 | FG18C0G1H221JNT0□ |
| C0G | 270pF | ±5% | 50 | FG18C0G1H271JNT0□ |
| C0G | 330pF | ±5% | 50 | FG18C0G1H331JNT0□ |
| C0G | 390pF | ±5% | 50 | FG18C0G1H391JNT0□ |
| C0G | 470pF | ±5% | 50 | FG18C0G1H471JNT0□ |
| C0G | 560pF | ±5% | 50 | FG18C0G1H561JNT0□ |
| C0G | 680pF | ±5% | 50 | FG18C0G1H681JNT0□ |
| C0G | 820pF | ±5% | 50 | FG18C0G1H821JNT0□ |
| C0G | 1nF | ±5% | 50 | FG18C0G1H102JNT0□ |
| C0G | 1.2nF | ±5% | 50 | FG18C0G1H122JNT0□ |
| C0G | 1.5nF | ±5% | 50 | FG18C0G1H152JNT0□ |
| C0G | 1.8nF | ±5% | 50 | FG18C0G1H182JNT0□ |
| C0G | 2.2nF | ±5% | 50 | FG18C0G1H222JNT0□ |
| C0G | 2.7nF | ±5% | 50 | FG18C0G1H272JNT0□ |
| C0G | 3.3nF | ±5% | 50 | FG18C0G1H332JNT0□ |
| C0G | 3.9nF | ±5% | 50 | FG18C0G1H392JNT0□ |
| C0G | 4.7nF | ±5% | 50 | FG18C0G1H472JNT0□ |
| C0G | 5.6nF | ±5% | 50 | FG18C0G1H562JNT0□ |
| C0G | 6.8nF | ±5% | 50 | FG18C0G1H682JNT0□ |
| C0G | 8.2nF | ±5% | 50 | FG18C0G1H822JNT0□ |

* The part numbers are TDK's standard specification products.

** The " □ " of the Part Number contains the packaging symbol, 0 (Bulk packaging) or 6 (Taping packaging).

⚠ Please be sure to request delivery specifications that provide further details on the features and specifications of the products for proper and safe use.
Please note that the contents may change without any prior notice due to reasons such as upgrading.

# FG18 Type

## ■ELECTRICAL CHARACTERISTICS

□CHARACTERISTICS SPECIFICATION TABLE

CLASS 1 (TEMPERATURE COMPENSATION)

| Temperature characteristics | Capacitance | Tolerance | Rated voltage Edc (V) | Part No.* |
|---|---|---|---|---|
| C0G | 10nF | ±5% | 50 | FG18C0G1H103JNT0□** |
| C0G | 1.0pF | ±0.25pF | 100 | FG18C0G2A010CNT0□ |
| C0G | 1.5pF | ±0.25pF | 100 | FG18C0G2A1R5CNT0□ |
| C0G | 2.0pF | ±0.25pF | 100 | FG18C0G2A020CNT0□ |
| C0G | 2.2pF | ±0.25pF | 100 | FG18C0G2A2R2CNT0□ |
| C0G | 3.0pF | ±0.25pF | 100 | FG18C0G2A030CNT0□ |
| C0G | 3.3pF | ±0.25pF | 100 | FG18C0G2A3R3CNT0□ |
| C0G | 4.0pF | ±0.25pF | 100 | FG18C0G2A040CNT0□ |
| C0G | 4.7pF | ±0.25pF | 100 | FG18C0G2A4R7CNT0□ |
| C0G | 5.0pF | ±0.25pF | 100 | FG18C0G2A050CNT0□ |
| C0G | 6.0pF | ±0.5pF | 100 | FG18C0G2A060DNT0□ |
| C0G | 6.8pF | ±0.5pF | 100 | FG18C0G2A6R8DNT0□ |
| C0G | 7.0pF | ±0.5pF | 100 | FG18C0G2A070DNT0□ |
| C0G | 8.0pF | ±0.5pF | 100 | FG18C0G2A080DNT0□ |
| C0G | 9.0pF | ±0.5pF | 100 | FG18C0G2A090DNT0□ |
| C0G | 10pF | ±0.5pF | 100 | FG18C0G2A100DNT0□ |
| C0G | 12pF | ±5% | 100 | FG18C0G2A120JNT0□ |
| C0G | 15pF | ±5% | 100 | FG18C0G2A150JNT0□ |
| C0G | 18pF | ±5% | 100 | FG18C0G2A180JNT0□ |
| C0G | 22pF | ±5% | 100 | FG18C0G2A220JNT0□ |
| C0G | 27pF | ±5% | 100 | FG18C0G2A270JNT0□ |
| C0G | 33pF | ±5% | 100 | FG18C0G2A330JNT0□ |
| C0G | 39pF | ±5% | 100 | FG18C0G2A390JNT0□ |
| C0G | 47pF | ±5% | 100 | FG18C0G2A470JNT0□ |
| C0G | 56pF | ±5% | 100 | FG18C0G2A560JNT0□ |
| C0G | 68pF | ±5% | 100 | FG18C0G2A680JNT0□ |
| C0G | 82pF | ±5% | 100 | FG18C0G2A820JNT0□ |
| C0G | 100pF | ±5% | 100 | FG18C0G2A101JNT0□ |
| C0G | 120pF | ±5% | 100 | FG18C0G2A121JNT0□ |
| C0G | 150pF | ±5% | 100 | FG18C0G2A151JNT0□ |
| C0G | 180pF | ±5% | 100 | FG18C0G2A181JNT0□ |
| C0G | 220pF | ±5% | 100 | FG18C0G2A221JNT0□ |
| C0G | 270pF | ±5% | 100 | FG18C0G2A271JNT0□ |
| C0G | 330pF | ±5% | 100 | FG18C0G2A331JNT0□ |
| C0G | 390pF | ±5% | 100 | FG18C0G2A391JNT0□ |
| C0G | 470pF | ±5% | 100 | FG18C0G2A471JNT0□ |
| C0G | 560pF | ±5% | 100 | FG18C0G2A561JNT0□ |
| C0G | 680pF | ±5% | 100 | FG18C0G2A681JNT0□ |
| C0G | 820pF | ±5% | 100 | FG18C0G2A821JNT0□ |
| C0G | 1nF | ±5% | 100 | FG18C0G2A102JNT0□ |
| C0G | 1.2nF | ±5% | 100 | FG18C0G2A122JNT0□ |
| C0G | 1.5nF | ±5% | 100 | FG18C0G2A152JNT0□ |
| C0G | 1.8nF | ±5% | 100 | FG18C0G2A182JNT0□ |
| C0G | 2.2nF | ±5% | 100 | FG18C0G2A222JNT0□ |
| C0G | 2.7nF | ±5% | 100 | FG18C0G2A272JNT0□ |
| C0G | 3.3nF | ±5% | 100 | FG18C0G2A332JNT0□ |

* The part numbers are TDK's standard specification products.

** The " □ " of the Part Number contains the packaging symbol, 0 (Bulk packaging) or 6 (Taping packaging).

⚠ Please be sure to request delivery specifications that provide further details on the features and specifications of the products for proper and safe use.
Please note that the contents may change without any prior notice due to reasons such as upgrading.

# FG18 Type

## ■ELECTRICAL CHARACTERISTICS

□CHARACTERISTICS SPECIFICATION TABLE

CLASS 2 (TEMPERATURE STABLE)

| Temperature characteristics | Capacitance | Tolerance | Rated voltage Edc (V) | Part No.* |
|---|---|---|---|---|
| X5R | 1.5uF | ±10% | 25 | FG18X5R1E155KRT0□** |
| X5R | 2.2uF | ±10% | 25 | FG18X5R1E225KRT0□ |
| X5R | 3.3uF | ±10% | 25 | FG18X5R1E335KRT0□ |
| X5R | 4.7uF | ±10% | 25 | FG18X5R1E475KRT0□ |
| X5R | 6.8uF | ±10% | 25 | FG18X5R1E685KRT0□ |
| X5R | 10uF | ±10% | 25 | FG18X5R1E106KRT0□ |
| X5R | 680nF | ±10% | 50 | FG18X5R1H684KRT0□ |
| X5R | 1uF | ±10% | 50 | FG18X5R1H105KRT0□ |
| X7R | 1.5uF | ±10% | 10 | FG18X7R1A155KRT0□ |
| X7R | 2.2uF | ±10% | 10 | FG18X7R1A225KRT0□ |
| X7R | 150nF | ±10% | 25 | FG18X7R1E154KNT0□ |
| X7R | 680nF | ±10% | 25 | FG18X7R1E684KRT0□ |
| X7R | 1uF | ±10% | 25 | FG18X7R1E105KRT0□ |
| X7R | 1nF | ±10% | 50 | FG18X7R1H102KNT0□ |
| X7R | 1.5nF | ±10% | 50 | FG18X7R1H152KNT0□ |
| X7R | 2.2nF | ±10% | 50 | FG18X7R1H222KNT0□ |
| X7R | 3.3nF | ±10% | 50 | FG18X7R1H332KNT0□ |
| X7R | 4.7nF | ±10% | 50 | FG18X7R1H472KNT0□ |
| X7R | 6.8nF | ±10% | 50 | FG18X7R1H682KNT0□ |
| X7R | 10nF | ±10% | 50 | FG18X7R1H103KNT0□ |
| X7R | 15nF | ±10% | 50 | FG18X7R1H153KNT0□ |
| X7R | 22nF | ±10% | 50 | FG18X7R1H223KNT0□ |
| X7R | 33nF | ±10% | 50 | FG18X7R1H333KNT0□ |
| X7R | 47nF | ±10% | 50 | FG18X7R1H473KNT0□ |
| X7R | 68nF | ±10% | 50 | FG18X7R1H683KNT0□ |
| X7R | 100nF | ±10% | 50 | FG18X7R1H104KNT0□ |
| X7R | 150nF | ±10% | 50 | FG18X7R1H154KRT0□ |
| X7R | 220nF | ±10% | 50 | FG18X7R1H224KRT0□ |
| X7R | 330nF | ±10% | 50 | FG18X7R1H334KRT0□ |
| X7R | 470nF | ±10% | 50 | FG18X7R1H474KRT0□ |
| X7R | 1nF | ±10% | 100 | FG18X7R2A102KNT0□ |
| X7R | 1.5nF | ±10% | 100 | FG18X7R2A152KNT0□ |
| X7R | 2.2nF | ±10% | 100 | FG18X7R2A222KNT0□ |
| X7R | 3.3nF | ±10% | 100 | FG18X7R2A332KNT0□ |
| X7R | 4.7nF | ±10% | 100 | FG18X7R2A472KNT0□ |
| X7R | 6.8nF | ±10% | 100 | FG18X7R2A682KNT0□ |
| X7R | 10nF | ±10% | 100 | FG18X7R2A103KNT0□ |
| X7R | 15nF | ±10% | 100 | FG18X7R2A153KNT0□ |
| X7R | 22nF | ±10% | 100 | FG18X7R2A223KNT0□ |
| X7S | 33nF | ±10% | 100 | FG18X7S2A333KRT0□ |
| X7S | 47nF | ±10% | 100 | FG18X7S2A473KRT0□ |
| X7S | 68nF | ±10% | 100 | FG18X7S2A683KRT0□ |
| X7S | 100nF | ±10% | 100 | FG18X7S2A104KRT0□ |

* The part numbers are TDK's standard specification products.

** The " □ " of the Part Number contains the packaging symbol, 0 (Bulk packaging) or 6 (Taping packaging).

⚠ Please be sure to request delivery specifications that provide further details on the features and specifications of the products for proper and safe use.
Please note that the contents may change without any prior notice due to reasons such as upgrading.

# FG14 Type

## SHAPE & DIMENSIONS

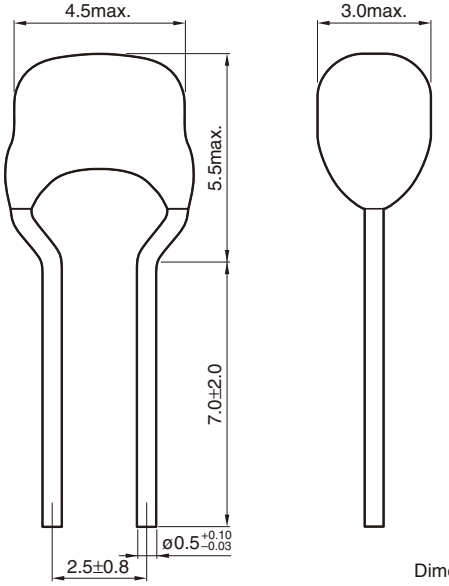


Dimensions in mm

⚠ Please be sure to request delivery specifications that provide further details on the features and specifications of the products for proper and safe use.
Please note that the contents may change without any prior notice due to reasons such as upgrading.

# FG14 Type

## ■ELECTRICAL CHARACTERISTICS

□CHARACTERISTICS SPECIFICATION TABLE

CLASS 1 (TEMPERATURE COMPENSATION)

| Temperature characteristics | Capacitance | Tolerance | Rated voltage Edc (V) | Part No.* |
|---|---|---|---|---|
| C0G | 15nF | ±5% | 50 | FG14C0G1H153JNT0□** |
| C0G | 22nF | ±5% | 50 | FG14C0G1H223JNT0□ |
| C0G | 33nF | ±5% | 50 | FG14C0G1H333JNT0□ |
| C0G | 3.9nF | ±5% | 100 | FG14C0G2A392JNT0□ |
| C0G | 4.7nF | ±5% | 100 | FG14C0G2A472JNT0□ |
| C0G | 5.6nF | ±5% | 100 | FG14C0G2A562JNT0□ |
| C0G | 6.8nF | ±5% | 100 | FG14C0G2A682JNT0□ |
| C0G | 8.2nF | ±5% | 100 | FG14C0G2A822JNT0□ |
| C0G | 10nF | ±5% | 100 | FG14C0G2A103JNT0□ |

* The part numbers are TDK's standard specification products.

** The " □ " of the Part Number contains the packaging symbol, 0 (Bulk packaging) or 6 (Taping packaging).

CLASS 2 (TEMPERATURE STABLE)

| Temperature characteristics | Capacitance | Tolerance | Rated voltage Edc (V) | Part No.* |
|---|---|---|---|---|
| X5R | 15uF | ±20% | 25 | FG14X5R1E156MRT0□** |
| X5R | 22uF | ±20% | 25 | FG14X5R1E226MRT0□ |
| X5R | 3.3uF | ±10% | 50 | FG14X5R1H335KRT0□ |
| X5R | 4.7uF | ±10% | 50 | FG14X5R1H475KRT0□ |
| X7R | 6.8uF | ±10% | 10 | FG14X7R1A685KRT0□ |
| X7R | 10uF | ±10% | 10 | FG14X7R1A106KRT0□ |
| X7R | 680nF | ±10% | 16 | FG14X7R1C684KNT0□ |
| X7R | 470nF | ±10% | 25 | FG14X7R1E474KNT0□ |
| X7R | 3.3uF | ±10% | 25 | FG14X7R1E335KRT0□ |
| X7R | 4.7uF | ±10% | 25 | FG14X7R1E475KRT0□ |
| X7R | 150nF | ±10% | 50 | FG14X7R1H154KNT0□ |
| X7R | 220nF | ±10% | 50 | FG14X7R1H224KNT0□ |
| X7R | 330nF | ±10% | 50 | FG14X7R1H334KNT0□ |
| X7R | 680nF | ±10% | 50 | FG14X7R1H684KRT0□ |
| X7R | 1uF | ±10% | 50 | FG14X7R1H105KRT0□ |
| X7R | 1.5uF | ±10% | 50 | FG14X7R1H155KRT0□ |
| X7R | 2.2uF | ±10% | 50 | FG14X7R1H225KRT0□ |
| X7R | 33nF | ±10% | 100 | FG14X7R2A333KNT0□ |
| X7R | 47nF | ±10% | 100 | FG14X7R2A473KNT0□ |
| X7R | 68nF | ±10% | 100 | FG14X7R2A683KNT0□ |
| X7R | 100nF | ±10% | 100 | FG14X7R2A104KNT0□ |
| X7S | 150nF | ±10% | 100 | FG14X7S2A154KRT0□ |
| X7S | 220nF | ±10% | 100 | FG14X7S2A224KRT0□ |
| X7S | 330nF | ±10% | 100 | FG14X7S2A334KRT0□ |
| X7S | 470nF | ±10% | 100 | FG14X7S2A474KRT0□ |
| X7S | 680nF | ±10% | 100 | FG14X7S2A684KRT0□ |
| X7S | 1uF | ±10% | 100 | FG14X7S2A105KRT0□ |

* The part numbers are TDK's standard specification products.

** The " □ " of the Part Number contains the packaging symbol, 0 (Bulk packaging) or 6 (Taping packaging).

⚠ Please be sure to request delivery specifications that provide further details on the features and specifications of the products for proper and safe use.
Please note that the contents may change without any prior notice due to reasons such as upgrading.

# FG16 Type

## SHAPE & DIMENSIONS

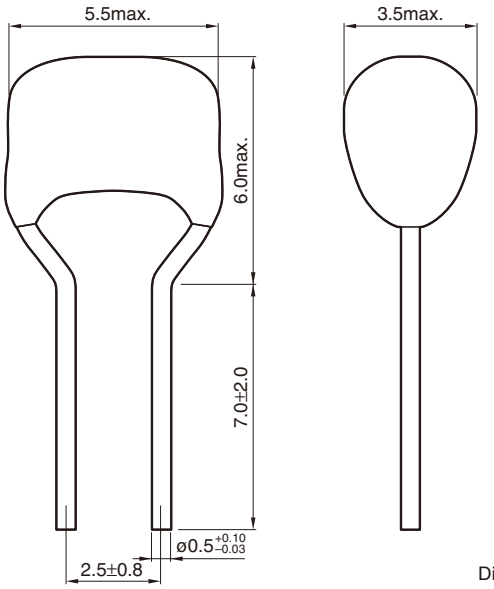


Dimensions in mm

⚠ Please be sure to request delivery specifications that provide further details on the features and specifications of the products for proper and safe use.
Please note that the contents may change without any prior notice due to reasons such as upgrading.

# FG16 Type

## ■ELECTRICAL CHARACTERISTICS

□CHARACTERISTICS SPECIFICATION TABLE

CLASS 1 (TEMPERATURE COMPENSATION)

| Temperature characteristics | Capacitance | Tolerance | Rated voltage Edc (V) | Part No.* |
|---|---|---|---|---|
| C0G | 47nF | ±5% | 50 | FG16C0G1H473JNT0□** |
| C0G | 68nF | ±5% | 50 | FG16C0G1H683JNT0□ |
| C0G | 100nF | ±5% | 50 | FG16C0G1H104JNT0□ |
| C0G | 15nF | ±5% | 100 | FG16C0G2A153JNT0□ |
| C0G | 22nF | ±5% | 100 | FG16C0G2A223JNT0□ |
| C0G | 33nF | ±5% | 100 | FG16C0G2A333JNT0□ |

* The part numbers are TDK's standard specification products.

** The " □ " of the Part Number contains the packaging symbol, 0 (Bulk packaging) or 6 (Taping packaging).

CLASS 2 (TEMPERATURE STABLE)

| Temperature characteristics | Capacitance | Tolerance | Rated voltage Edc (V) | Part No.* |
|---|---|---|---|---|
| X5R | 33uF | ±20% | 25 | FG16X5R1E336MRT0□** |
| X5R | 47uF | ±20% | 25 | FG16X5R1E476MRT0□ |
| X5R | 6.8uF | ±10% | 50 | FG16X5R1H685KRT0□ |
| X5R | 10uF | ±10% | 50 | FG16X5R1H106KRT0□ |
| X7R | 1uF | ±10% | 25 | FG16X7R1E105KNT0□ |
| X7R | 1.5uF | ±10% | 25 | FG16X7R1E155KNT0□ |
| X7R | 2.2uF | ±10% | 25 | FG16X7R1E225KNT0□ |
| X7R | 6.8uF | ±10% | 25 | FG16X7R1E685KRT0□ |
| X7R | 10uF | ±10% | 25 | FG16X7R1E106KRT0□ |
| X7R | 470nF | ±10% | 50 | FG16X7R1H474KNT0□ |
| X7R | 680nF | ±10% | 50 | FG16X7R1H684KNT0□ |
| X7R | 3.3uF | ±10% | 50 | FG16X7R1H335KRT0□ |
| X7R | 4.7uF | ±10% | 50 | FG16X7R1H475KRT0□ |
| X7R | 150nF | ±10% | 100 | FG16X7R2A154KNT0□ |
| X7R | 220nF | ±10% | 100 | FG16X7R2A224KNT0□ |
| X7R | 330nF | ±10% | 100 | FG16X7R2A334KNT0□ |
| X7R | 470nF | ±10% | 100 | FG16X7R2A474KNT0□ |
| X7R | 680nF | ±10% | 100 | FG16X7R2A684KNT0□ |
| X7R | 1uF | ±10% | 100 | FG16X7R2A105KNT0□ |
| X7S | 1.5uF | ±10% | 100 | FG16X7S2A155KRT0□ |
| X7S | 2.2uF | ±10% | 100 | FG16X7S2A225KRT0□ |
| X7S | 3.3uF | ±10% | 100 | FG16X7S2A335KRT0□ |

* The part numbers are TDK's standard specification products.

** The " □ " of the Part Number contains the packaging symbol, 0 (Bulk packaging) or 6 (Taping packaging).

⚠ Please be sure to request delivery specifications that provide further details on the features and specifications of the products for proper and safe use.
Please note that the contents may change without any prior notice due to reasons such as upgrading.

# FG11 Type

## SHAPE & DIMENSIONS

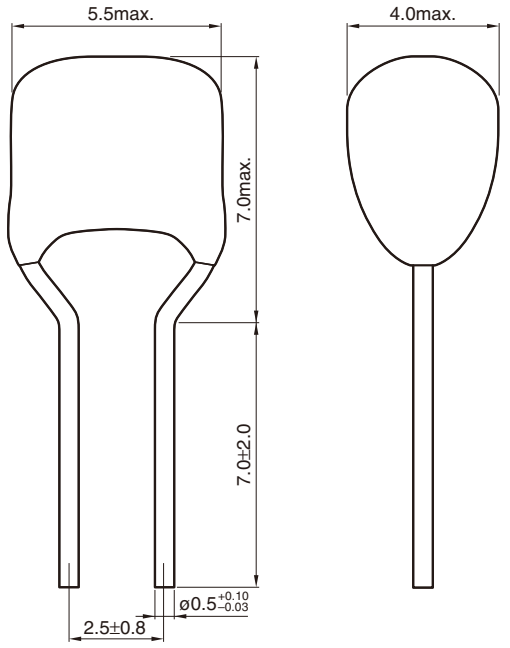


Dimensions in mm

⚠ Please be sure to request delivery specifications that provide further details on the features and specifications of the products for proper and safe use.
Please note that the contents may change without any prior notice due to reasons such as upgrading.

# FG11 Type

## ■ELECTRICAL CHARACTERISTICS

□CHARACTERISTICS SPECIFICATION TABLE

CLASS 1 (TEMPERATURE COMPENSATION)

| Temperature characteristics | Capacitance | Tolerance | Rated voltage Edc (V) | Part No.* |
|---|---|---|---|---|
| C0G | 47nF | ±5% | 100 | FG11C0G2A473JNT0□** |
| C0G | 68nF | ±5% | 100 | FG11C0G2A683JNT0□ |

* The part numbers are TDK's standard specification products.

** The " □ " of the Part Number contains the packaging symbol, 0 (Bulk packaging) or 6 (Taping packaging).

CLASS 2 (TEMPERATURE STABLE)

| Temperature characteristics | Capacitance | Tolerance | Rated voltage Edc (V) | Part No.* |
|---|---|---|---|---|
| X5R | 68uF | ±20% | 6.3 | FG11X5R0J686MRT0□** |
| X5R | 100uF | ±20% | 6.3 | FG11X5R0J107MRT0□ |
| X7R | 15uF | ±20% | 16 | FG11X7R1C156MRT0□ |
| X7R | 22uF | ±20% | 16 | FG11X7R1C226MRT0□ |
| X7R | 3.3uF | ±10% | 25 | FG11X7R1E335KNT0□ |
| X7R | 4.7uF | ±10% | 25 | FG11X7R1E475KNT0□ |
| X7R | 1uF | ±10% | 50 | FG11X7R1H105KNT0□ |
| X7R | 1.5uF | ±10% | 50 | FG11X7R1H155KNT0□ |
| X7R | 10uF | ±10% | 50 | FG11X7R1H106KRT0□ |
| X7R | 1.5uF | ±10% | 100 | FG11X7R2A155KRT0□ |
| X7R | 2.2uF | ±10% | 100 | FG11X7R2A225KRT0□ |
| X7S | 6.8uF | ±10% | 50 | FG11X7S1H685KRT0□ |
| X7S | 10uF | ±10% | 50 | FG11X7S1H106KRT0□ |
| X7S | 4.7uF | ±10% | 100 | FG11X7S2A475KRT0□ |

* The part numbers are TDK's standard specification products.

** The " □ " of the Part Number contains the packaging symbol, 0 (Bulk packaging) or 6 (Taping packaging).

⚠ Please be sure to request delivery specifications that provide further details on the features and specifications of the products for proper and safe use.
Please note that the contents may change without any prior notice due to reasons such as upgrading.

# Packaging Style

## ■TAPING DIMENSIONS

**□Lead pitch 5.0 mm**
**(FG28, FG24, FG26, FG20, FG22 Type)**

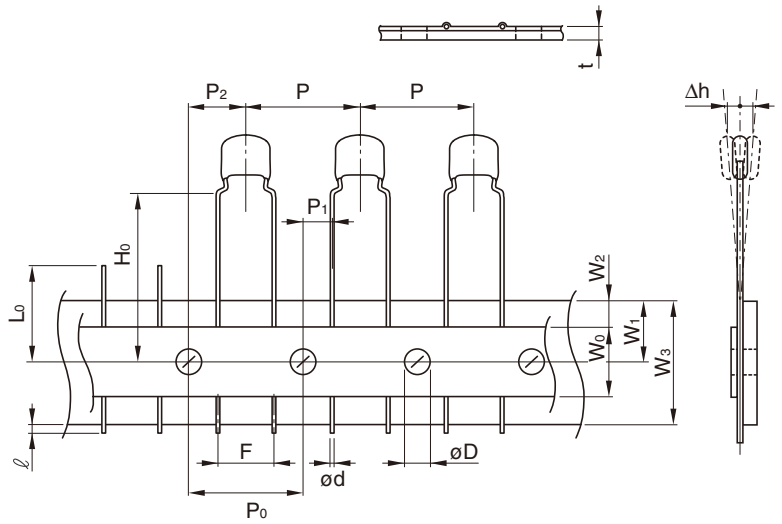


| Symbol | Dimensions (mm) |
|---|---|
| P | 12.7±1.0 |
| $P_0$*1 | 12.7±0.3 |
| $P_1$ | 3.85±0.7 |
| $P_2$ | 6.35±1.3 |
| $W_0$ | 12.0±1.0 |
| $W_1$ | 9.0±0.5 |
| $W_2$*2 | 3.0max. |
| $W_3$ | 18.0+1.0, –0.5 |
| $H_0$ | 16.0±0.5 |
| ℓ | 1.0max. |
| t | 0.6±0.2 |
| $L_0$*3 | 11.0max. |
| F | 5.0+0.8, –0.2 |
| ød | ø0.5+0.1, –0.03 |
| øD | ø4.0±0.2 |
| Δh | 0±2 |

*1 Accumulated pitch tolerance shall be ±2mm for 20 pitches.
*2 Adhesive tape shall not stick out from carrier tape.
*3 The number of consecutive gaps in the product shall be three or less.

**□Lead pitch 2.5 mm**
**(FG18, FG14, FG16, FG11 Type)**

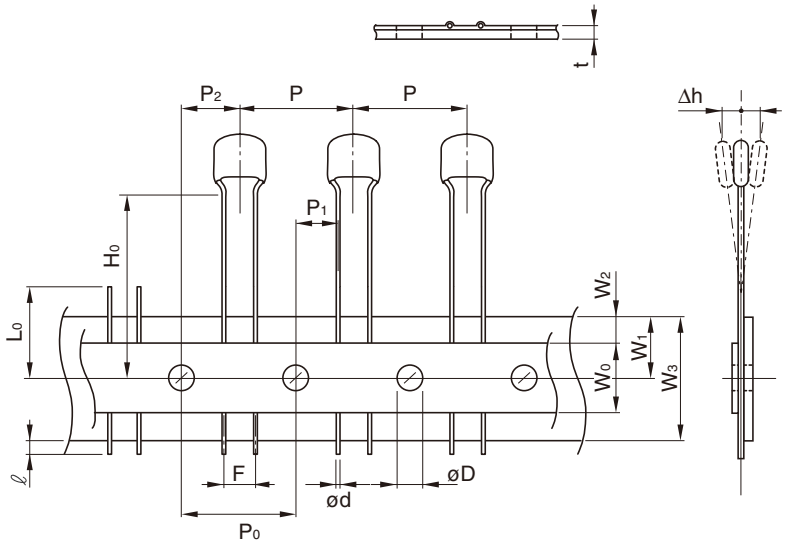


| Symbol | Dimensions (mm) |
|---|---|
| P | 12.7±1.0 |
| $P_0$*1 | 12.7±0.3 |
| $P_1$ | 5.1±0.7 |
| $P_2$ | 6.35±1.3 |
| $W_0$ | 12.0±1.0 |
| $W_1$ | 9.0±0.5 |
| $W_2$*2 | 3.0max. |
| $W_3$ | 18.0+1.0, –0.5 |
| $H_0$ | 16.0±0.5 |
| ℓ | 1.0max. |
| t | 0.6±0.2 |
| $L_0$*3 | 11.0max. |
| F | 2.5+0.5, –0.2 |
| ød | ø0.5+0.1, –0.03 |
| øD | ø4.0±0.2 |
| Δh | 0±2 |

*1 Accumulated pitch tolerance shall be ±2mm for 20 pitches.
*2 Adhesive tape shall not stick out from carrier tape.
*3 The number of consecutive gaps in the product shall be three or less.

## ■AMMO PACK INNER BOX SIZE

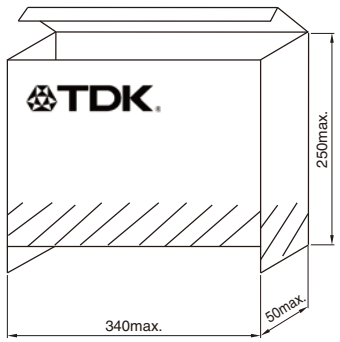


Dimensions in mm

⚠ Please be sure to request delivery specifications that provide further details on the features and specifications of the products for proper and safe use.
Please note that the contents may change without any prior notice due to reasons such as upgrading.