Dual 12-Bit Buffered Multiplying CMOS D/A Converter

DAC8221

FEATURES

- Two Matched 12-Bit DACs on One Chip
- Packaged in a Narrow 0.3" 24-Pin DIP
- Direct Parallel Load of All 12 Bits for High DataThroughput
- On-Chip Latches for Both DACs
- 12-Bit Endpont Linearity (±1/2 LSB) Over Temperature
- +5V to +15V Single Supply Operation
- DACs Matched to 0.2% Typically
- Four-Quadrant Multiplication
- Improved ESD Resistance
- Available in Die Form

APPLICATIONS

- Automatic Test Equipment
- Industrial Automation
- Robotics/Process Control
- Programmable Instrumentation Equipment
- Digital Gain/Attenuation Control
- Ideal for Battery-Operated Equipment

ORDERING INFORMATION †

RELATIVE ACCURACY (+5V or +15V)	GAIN ERROR (+5V or +15V)	PACKAGE: MILITARY* TEMPERATURE −55°C to +125°C	PACKAGE: INDUSTRIAL TEMPERATURE −40°C to +85°C	PACKAGE: COMMERCIAL TEMPERATURE 0°C to +70°C
±1/2 LSB	±1 LSB	DAC8221AW	DAC8221EW	–
±1/2 LSB	±2 LSB	–	–	DAC8221GP
±1 LSB	±4 LSB	–	DAC8221FW	DAC8221HP
±1 LSB	±4 LSB	–	DAC8221FP	DAC8221HS††

* For devices processed in total compliance to MIL-SDT-883, add /883 after part number. Consult factory for 883 data sheet.

† Burn-in is available on commercial and industrial temperature range parts in CerDIP, plastic DIP, and TO-can packages.

†† For availability and burn-in information on SO and PLCC packages, contact your local sales office.

GENERAL DESCRIPTION

The DAC-8221 combines two identical 12-bit, multiplying, digital-to-analog converters into a single CMOS chip. This device is electrically similar to DAC-8212 with improved microprocessor interface timing and is packaged in a narrow 0.300" DIP. Monolithic construction offers excellent DAC-to-DAC matching and tracking over the full operating temperature range. The DAC-8221 consists of two thin-film R-2R resistor-ladder networks, two 12-bit data latches, one 12-bit input buffer, and control logic. The DAC-8221 operates on a single supply from +5V to +15V. Maximum power dissipation with 0V and +5V logic levels and a +5V supply is less than 0.5mW. The DAC-8221 is manufactured using PMI's highly-stable, thin-film resistors on an advanced oxide-isolated, silicon-gate, CMOS process. PMI's improved latch-up resistant design eliminates the need for external protective Schottky diodes.

A common 12-bit (TTL/CMOS compatible) input port is used to load a 12-bit-wide word into either of the two DACs. This port, whose data loading is similar to that of a RAM's write cycle, interfaces directly with most 12-bit or wider bus systems. With $\overline{WR}$ and $\overline{CS}$ lines at logic LOW, the input data registers are transparent. This allows direct unbuffered data to flow directly to the DAC output selected by $\overline{DAC\ A}$/DAC B control input. For applications requiring double-buffering, see the DAC-8222.

PIN CONNECTIONS

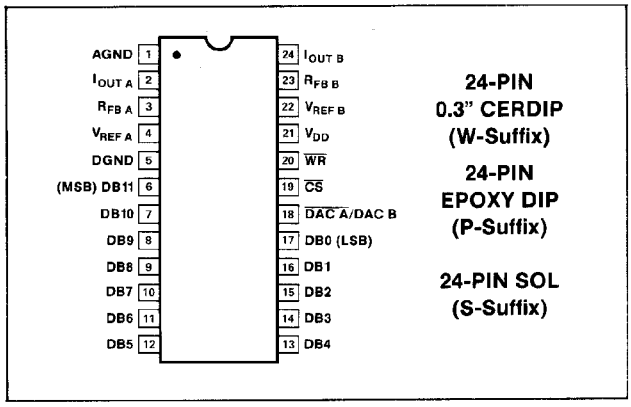

FUNCTIONAL DIAGRAM

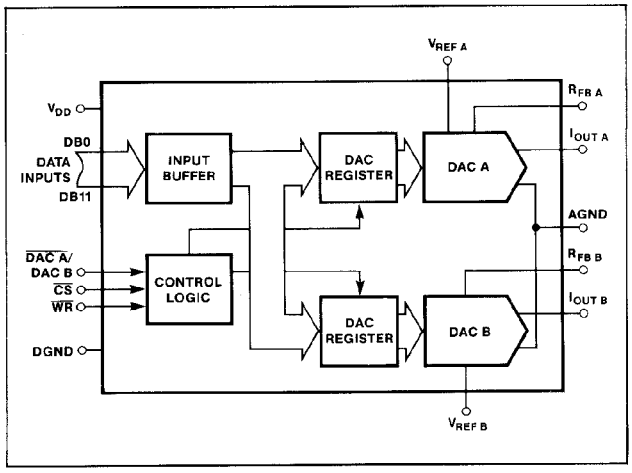

Information furnished by Analog Devices is believed to be accurate and reliable. However, no responsibility is assumed by Analog Devices for its use, nor for any infringements of patents or other rights of third parties which may result from its use. No license is granted by implication or otherwise under any patent or patent rights of Analog Devices.

One Technology Way, P.O. Box 9106, Norwood, MA 02062-9106, U.S.A.
Tel: 617/329-4700 Fax: 617/326-8703 Twx: 710/394-6577
Telex: 924491 Cable: ANALOG NORWOODMASS

ABSOLUTE MAXIMUM RATINGS

(T_A = +25°C, unless otherwise noted.)

V_{DD} to AGND ..... 0V, +17V
V_{DD} to DGND ..... 0V, +17V
AGND to DGND ..... –0.3V, V_{DD} +0.3V
Digital Input Voltage to DGND ..... –0.3V, V_{DD} +0.3V
$I_{OUT\ A}$, $I_{OUT\ B}$ to AGND ..... –0.3V, V_{DD} +0.3V
$V_{REF\ A}$, $V_{REF\ B}$ to AGND ..... ±25V
$V_{RFB\ A}$, $V_{RFB\ B}$ to AGND ..... ±25V
Operating Temperature Range
AW Version ..... –55°C to +125°C
EW, FW, FP Versions ..... –40°C to +85°C
GP, HP, HS Versions ..... –0°C to +70°C
Junction Temperature ..... +150C
Storage Temperature ..... –65°C to +150°C
Lead Temperature (Soldering, 60 sec) ..... +300°C

PACKAGE TYPE	Θ_{JA} (NOTE 1)	Θ_{JC}	UNITS
24-Pin Hermetic DIP (W)	69	10	°C/W
24-Pin Plastic DIP (P)	62	32	°C/W
24-Pin SOL (S)	72	24	°C/W

NOTE:
1. Θ_{JA} is specified for worst case mounting conditions, i.e., Θ_{JA} is specified for device in socket for CerDIP, and P-DIP packages; Θ_{JA} is specified for device soldered to printed circuit board for SOL package.

CAUTION:
1. Do no apply voltages higher than V_{DD} or less than GND potential on any terminal except V_{REF} and R_{FB}.
2. The digital control inputs are zener-protected; however, permanent damage may occur on unprotected units from high-energy electrostatic fields. Keep units in conductive foam at all times until ready to use.
3. Do not insert this device into powered sockets; remove power before insertion or removal.
4. Use proper anti-static handling procedures.
5. Stresses above those listed under "Absolute Maximum Ratings" may cause permanent damage to the device. This is a stress rating only and functional operation at or above this specification is not implied.

ELECTRICAL CHARACTERISTICS at V_{DD} = +5V or +15V, $V_{REF\ A}$ = $V_{REF\ B}$ = +10V, $V_{OUT\ A}$ = $V_{OUT\ B}$ = 0V; AGND = DGND = 0V; T_A = Full Temp. Range specified in Absolute Maximum Ratings; unless otherwise noted. Specifications apply for DAC A and DAC B.

PARAMETER	SYMBOL	CONDITIONS		DAC-8221 MIN	TYP	MAX	UNITS
STATIC ACCURACY							
Resolution	N			12	–	–	Bits
Relative Accuracy	INL	Endpoint Linearity Error	DAC-8221A/E/G DAC-8221B/F/H	– –	±0.2 ±0.4	±1/2 ±1	LSB
Differential Nonlinearity	DNL	All Grades are Monotonic		–	±0.2	±1	LSB
Full Scale Gain Error (Note 1)	G_{FSE}	DAC-8221A/E DAC-8221G DAC-8221B/F/H		– – –	±0.1 ±0.4 ±0.6	±1 ±2 ±4	LSB
Gain Temperature Coefficient ΔGain/ΔTemperature	TCG_{FS}	(Notes 2, 7)		–	±2	±5	ppm/°C
Output Leakage Current $I_{OUT\ A}$ (Pin 2), $I_{OUT\ B}$ (Pin 24)	I_{LKG}	All Digital Inputs = 0000 0000 0000	T_A = +25°C T_A = Full Temp. Range	– –	±1 ±2	±10 ±50	nA
Input Resistance ($R_{REF\ A}$, $R_{REF\ B}$)	R_{REF}	(Note 9)		8	22	15	kΩ
Input Resistance Match ($R_{REF\ A}$ $R_{REF\ B}$)	$\frac{\Delta R_{REF}}{R_{REF}}$			–	±0.2	±1	%
DIGITAL INPUTS							
Digital Input High	V_{INH}	V_{DD} = +5V V_{DD} = +15V		2.4 13.5	– –	– –	V
Digital Input Low	V_{INL}	V_{DD} = +5V V_{DD} = +15V		– –	– –	0.8 1.5	V
Input Current	I_{IN}	V_{IN} = 0V or V_{DD} and V_{INL} or V_{INH}	T_A = +25°C T_A = Full Temp. Range	– –	±0.006 ±0.1	±1 ±10	μA
Input Capacitance (Note 2)	C_{IN}	DB0 – DB11 $\overline{WR}$, $\overline{CS}$, $\overline{DAC\ A}$/DAC B		– –	– –	10 15	pF

ELECTRICAL CHARACTERISTICS at V_{DD} = +5V or +15V, $V_{REF\,A} = V_{REF\,B}$ = +10V, $V_{OUT\,A} = V_{OUT\,B}$ = 0V; AGND = DGND = 0V; T_A = Full Temp Range specified in Absolute Maximum Ratings; unless otherwise noted. Specifications apply for DAC A and DAC B. *Continued*

PARAMETER	SYMBOL	CONDITIONS	DAC-8221 MIN	TYP	MAX	UNITS
POWER SUPPLY						
Supply Current	I_{DD}	All Digital Inputs V_{INL} or V_{INH}	–	1	2	mA
		All Digital Inputs 0V or V_{DD}	–	2	100	µA
DC Power Supply Rejection Ratio (ΔGain/ΔV_{DD})	PSRR	ΔV_{DD} = ±5%	–	–	0.002	%/%
AC PERFORMANCE CHARACTERISTICS (Note 2)						
Propagation Delay (Notes 4, 5)	t_{pd}	T_A = +25°C	–	–	350	ns
Current Settling Time (Notes 5, 6)	t_s	T_A = +25°C	–	0.45	1	µs
Output Capacitance	$C_{OUT\,A}$ $C_{OUT\,B}$	DAC Latches Loaded with 0000 0000 0000	– –	30 60	90 120	pF
	$C_{OUT\,A}$ $C_{OUT\,B}$	DAC Latches Loaded with 1111 1111 1111	– –	60 30	120 90	
AC Feedthrough at $I_{OUT\,A}$ or $I_{OUT\,B}$	FT_A	$V_{REF\,A}$ to $I_{OUT\,A}$; $V_{REF\,A} = 20V_{p\text{-}p}$; f = 100kHz; T_A = +25°C	–	–	–70	dB
	FT_B	$V_{REF\,B}$ to $I_{OUT\,B}$; $V_{REF\,B} = 20V_{p\text{-}p}$; f = 100kHz; T_A = +25°C	–	–	–70	

SWITCHING CHARACTERISTICS (Notes 2, 3)	SYMBOL	V_{DD} = +5V +25°C	V_{DD} = +5V –40°C TO +85°C (Note 8)	V_{DD} = +5V –55°C TO +125°C	V_{DD} = +15V ALL TEMPS (Note 10)	UNITS
Chip Select to Write Set-Up Time	t_{CS}	130	160	160	70	ns MIN
Chip Select to Write Hold Time	t_{CH}	0	0	0	0	ns MIN
DAC Select to Write Set-Up Time	t_{AS}	120	140	160	70	ns MIN
DAC Select to Write Hold Time	t_{AH}	0	0	0	0	ns MIN
Data Valid to Write Set-Up Time	t_{DS}	190	210	220	90	ns MIN
Data Valid to Write Hold Time	t_{DH}	0	0	0	10	ns MIN
Write Pulse Width	t_{WR}	140	180	170	90	ns MIN

NOTES:
1. Measured using internal $R_{FB\,A}$ and $R_{FB\,B}$. Both DAC digital inputs = 1111 1111 1111.
2. Guaranteed and not tested.
3. See timing diagram.
4. From 50% of digital input to 90% of final analog output current. $V_{REF\,A} = V_{REF\,B}$ = +10V; OUT A, OUT B load = 100Ω, C_{EXT} = 13pF.
5. $\overline{WR}$, $\overline{CS}$ = 0V; DB0 – DB11 = 0V to V_{DD} or V_{DD} to 0V.
6. Settling time is measured from 50% of the digital input change to where the output voltage settles within 1/2 LSB of full scale.
7. Gain TC is measured from +25°C to T_{MIN} or from +25°C to T_{MAX}.
8. These limits apply for the commercial and industrial grade products.
9. Absolute temperature coefficient is approximately +50ppm/°C.
10. These limits also apply as typical values for V_{DD} = +12V with +5V CMOS logic levels and T_A = +25°C.

DICE CHARACTERISTICS

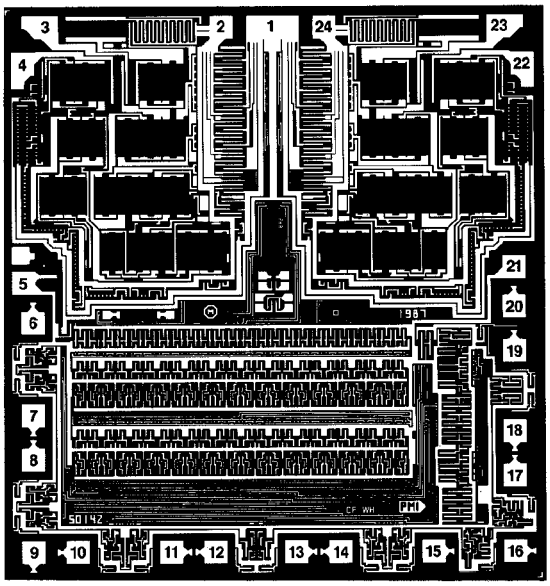

DIE SIZE 0.124 x 0.132 inch, 16,368 sq. mils
(3.15 x 3.35 mm, 10.55 sq. mm)

1. AGND
2. $I_{OUT\ A}$
3. $R_{FB\ A}$
4. $V_{REF\ A}$
5. DGND
6. DB11 (MSB)
7. DB10
8. DB9
9. DB8
10. DB7
11. DB6
12. DB5
13. DB4
14. DB3
15. DB2
16. DB1
17. DB0 (LSB)
18. $\overline{DAC}$ A/DAC B
19. $\overline{CS}$
20. $\overline{WR}$
21. V_{DD}
22. $V_{REF\ B}$
23. $R_{FB\ B}$
24. $I_{OUT\ B}$

Substrate (die backside) is internally connected to V_{DD}.

WAFER TEST LIMITS at V_{DD} = +5V or +15V, $V_{REF\ A} = V_{REF\ B}$ = +10V, $V_{OUT\ A} = V_{OUT\ B}$ = 0V; AGND = DGND = 0V; T_A = 25°C.

PARAMETER	SYMBOL	CONDITIONS	DAC-8221GBC LIMIT	UNITS
Relative Accuracy	INL	Endpoint Linearity Error	±1	LSB MAX
Differential Nonlinearity	DNL	All Grades are Guaranteed Monotonic	±1	LSB MAX
Full Scale Gain Error (Note 1)	G_{FSE}	Digital Inputs = 1111 1111 1111	±4	LSB MAX
Output Leakage ($I_{OUT\ A}$, $I_{OUT\ B}$)	I_{LKG}	Digital Inputs = 0000 0000 0000 Pads 2 and 24	±10	nA MAX
Input Resistance ($R_{REF\ A}$, $R_{REF\ B}$)	R_{REF}	Pads 4 and 22	8/15	kΩMIN/ kΩMAX
$R_{REF\ A}$, $R_{REF\ B}$ Input Resistance Match	$\frac{\Delta R_{REF}}{R_{REF}}$		±1	% MAX
Digital Input High	V_{INH}	V_{DD} = +5V V_{DD} = +15V	2.4 13.5	V MIN
Digital Input Low	V_{INL}	V_{DD} = +5V V_{DD} = +15V	0.8 1.5	V MAX
Digital Input Current	I_{IN}	V_{IN} = 0V or V_{DD}; V_{INL} or V_{INH}	±1	μA MAX
Supply Current	I_{DD}	All Digital Inputs V_{INL} or V_{INH} All Digital Inputs 0V or V_{DD}	2 0.1	mA MAX
DC Supply Rejection (ΔGain/ΔV_{DD})	PSRR	ΔV_{DD} = ±5%	0.002	%/% MAX

NOTES:
1. Measured using internal $R_{FB\ A}$ and $R_{FB\ B}$.

Electrical tests are performed at wafer probe to the limits shown. Due to variations in assembly methods and normal yield loss, yield after packaging is not guaranteed for standard product dice. Consult factory to negotiate specifications based on dice lot qualification through sample lot assembly and testing.

TYPICAL PERFORMANCE CHARACTERISTICS

CHANNEL-TO-CHANNEL MATCHING (DAC A & B ARE SUPERIMPOSED)

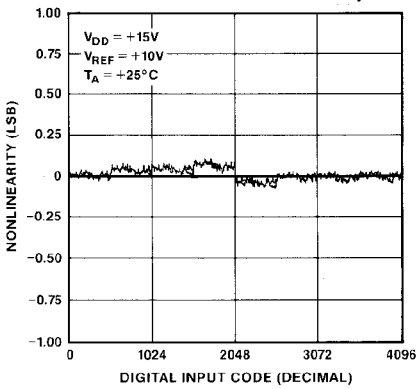

DIFFERENTIAL NONLINEARITY vs V_{REF}

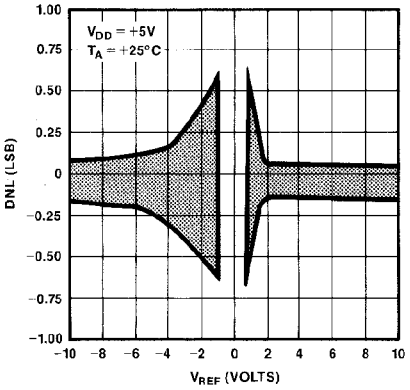

DIFFERENTIAL NONLINEARITY vs V_{REF}

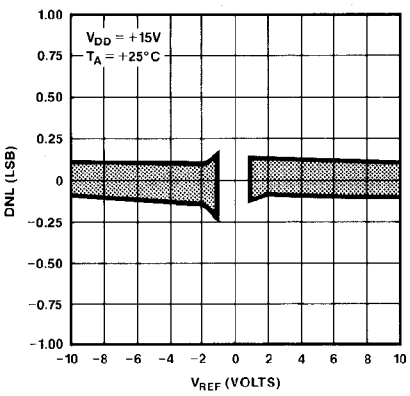

NONLINEARITY vs V_{REF}

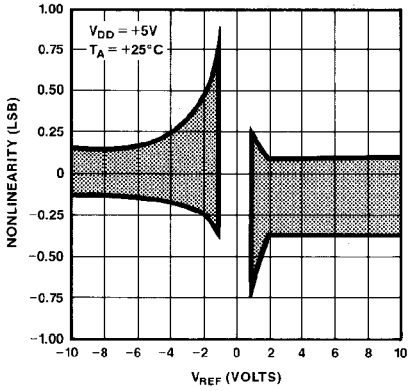

NONLINEARITY vs V_{REF}

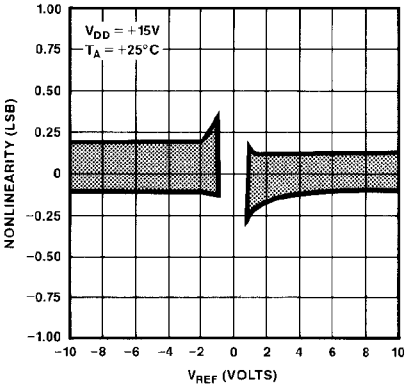

NONLINEARITY vs V_{DD}

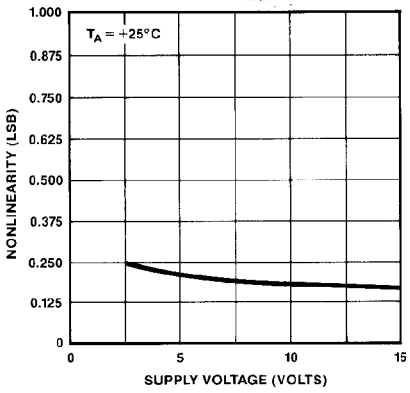

NONLINEARITY vs CODE (DAC A & B ARE SUPERIMPOSED)

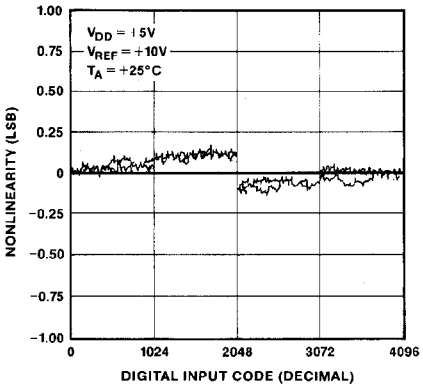

NONLINEARITY vs CODE AT T_A = −55°C, +25°C, +125°C FOR DAC A & B (ALL SUPERIMPOSED)

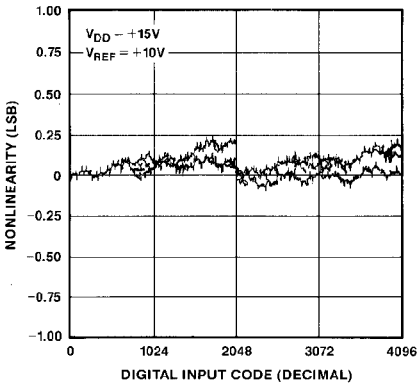

ABSOLUTE GAIN ERROR CHANGE vs V_{REF}

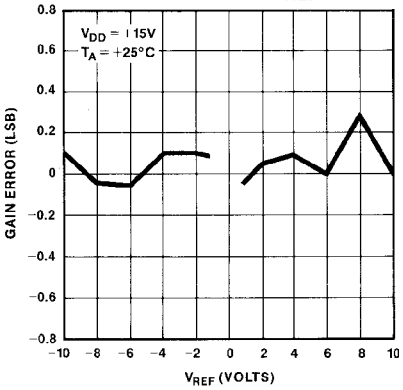

TYPICAL PERFORMANCE CHARACTERISTICS

FULL-SCALE GAIN ERROR vs TEMPERATURE

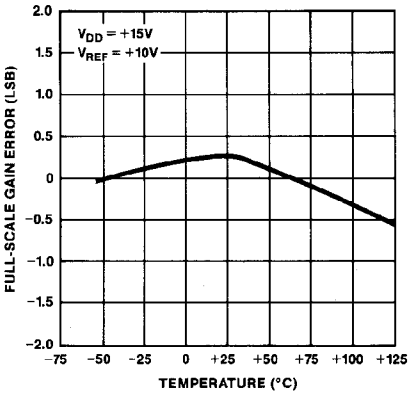

LOGIC INPUT THRESHOLD VOLTAGE vs SUPPLY VOLTAGE (V_{DD})

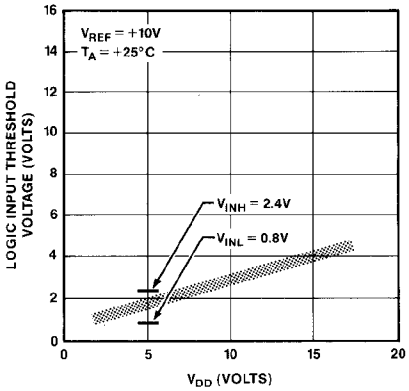

SUPPLY CURRENT vs TEMPERATURE

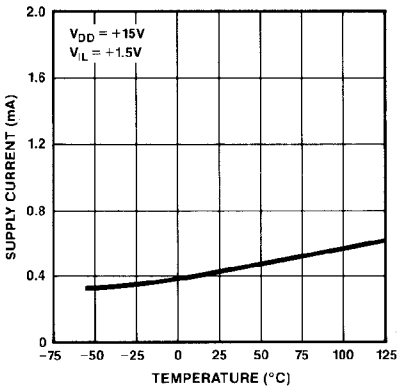

SUPPLY CURRENT vs LOGIC INPUT VOLTAGE

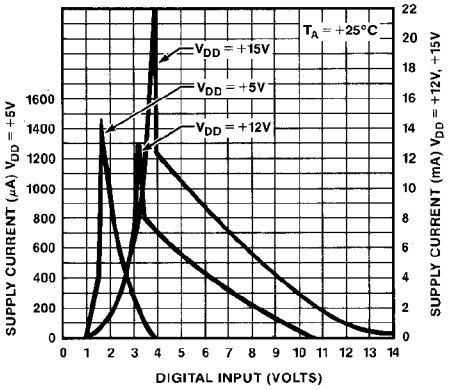

MULTIPLYING MODE FREQUENCY RESPONSE vs DIGITAL CODE

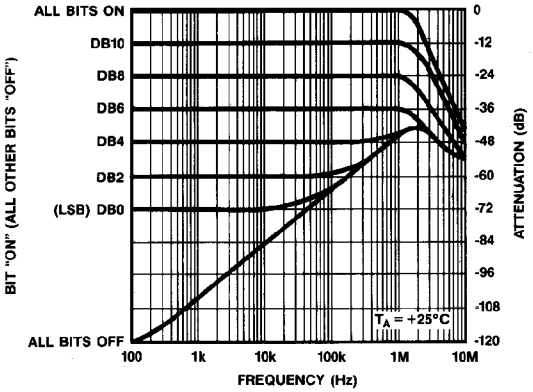

OUTPUT LEAKAGE CURRENT vs TEMPERATURE

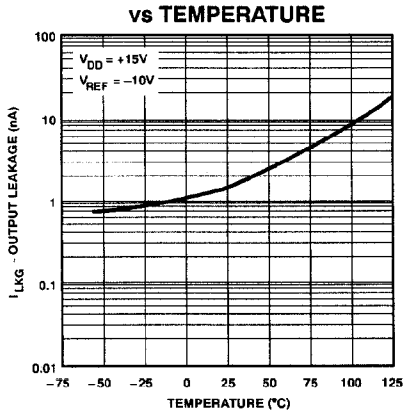

ANALOG CROSSTALK vs FREQUENCY

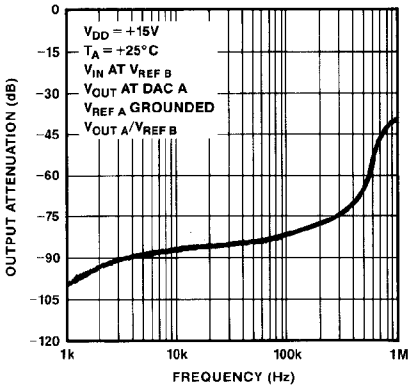

INTERFACE TIMING vs V_{DD}

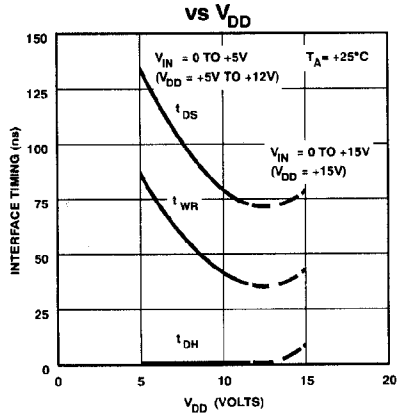

BURN-IN CIRCUIT

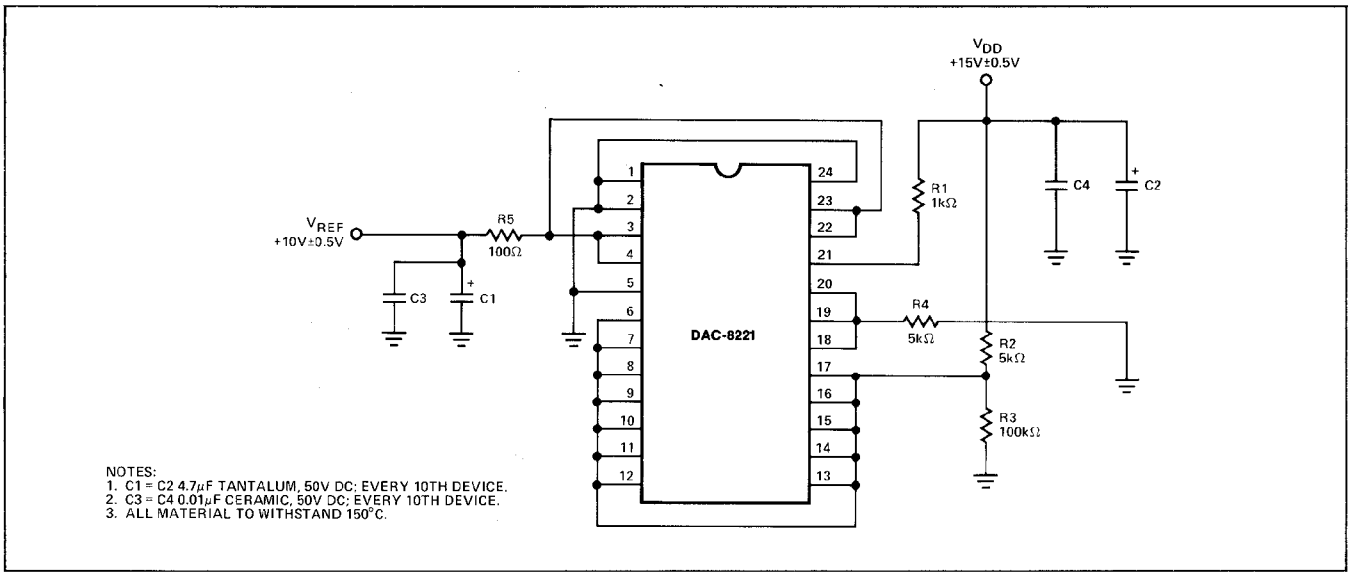

WRITE CYCLE TIMING DIAGRAM

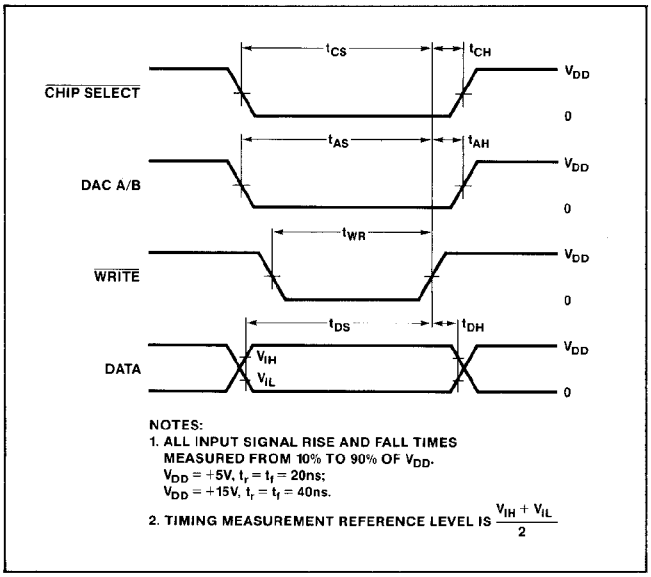

PARAMETER DEFINITIONS

RESOLUTION (n)

The resolution of a DAC is the number of states (2^n) that the full-scale range (FSR) is divided (or resolved) into; where n is equal to the number of bits.

RELATIVE ACCURACY (INL)

Relative accuracy, or integral nonlinearity, is the maximum deviation of the analog output (from the ideal) from a straight line drawn between the end points. It is expressed in terms of least significant bit (LSB), or as a percent of full scale.

DIFFERENTIAL NONLINEARITY (DNL)

Differential nonlinearity is the worst case deviation of any adjacent analog output from the ideal 1 LSB step size. The deviation of the actual "step size" from the ideal step size of 1 LSB is called the differential nonlinearity error or DNL. DACs with DNL greater than ±1 LSB may be nonmonotonic. ±1/2 LSB INL guarantees monotonicity and ±1 LSB maximum DNL.

GAIN ERROR (G_{FSE})

Gain error is the difference between the actual and the ideal analog output range, expressed as a percent of full-scale or in terms of LSB value. It is the deviation in slope of the DAC transfer characteristic from ideal.

Refer to PMI 1990/91 Data Book, Section 11, for additional digital-to-analog converter definitions.

GENERAL CIRCUIT DESCRIPTION

CONVERTER SECTION

The DAC-8221 incorporates two multiplying 12-bit current output CMOS digital-to-analog converters on one monolithic chip. It contains two highly-stable thin-film R-2R resistor-ladder networks, two 12-bit DAC registers, and one 12-bit input buffer. It also contains the DAC control logic circuitry and 24 single-pole, double-throw NMOS transistor current switches.

Figure 1 shows a simplified circuit for the R-2R ladder and transistor switches for a single DAC. R is typically 11kΩ. The transistor switches are binarily scaled in size to maintain a constant voltage drop across each switch. This presents a constant current load to V_{REF} so that it can be driven by a reference voltage or current, AC or DC (positive or negative). It is recommended that a low temperature-coefficient external R_{FB} resistor be used if a current source is employed. Figure 2 shows a single NMOS transistor switch.

FIGURE 1: Simplified D/A Circuit

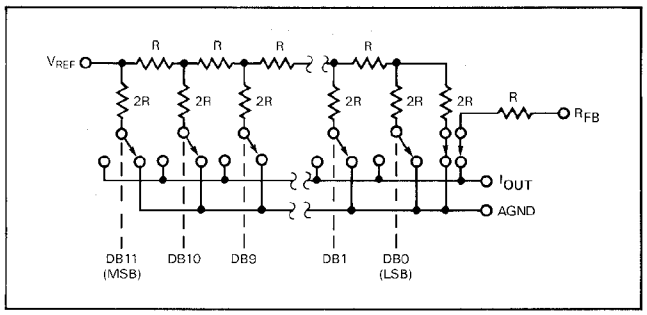

FIGURE 2: N-Channel Current Steering Switch

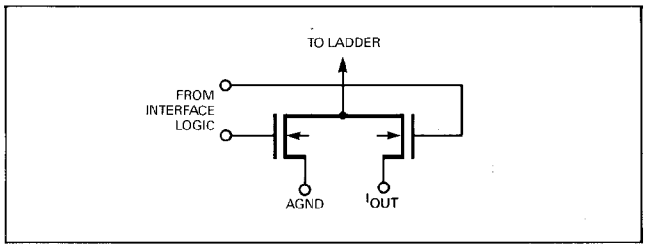

The binary-weighted currents are switched between I_{OUT} and AGND by the transistor switches. Selection between I_{OUT} and AGND is determined by the digital input code. It is important to keep the voltage difference between I_{OUT} and AGND terminals as close to zero as practical to preserve data sheet limits. It is easily accomplished by connecting the DAC's AGND to the noninverting input of an operational amplifier and I_{OUT} to the inverting input. The amplifier's feedback resistor can be eliminated by connecting the op amp's output directly to the DAC's R_{FB} terminal (by using the DAC's internal feedback resistor, R_{FB}), see Figure 6. The amplifier also provides the current-to-voltage conversion for the DAC's output current.

The output voltage is dependent on V_{REF} and the digital input code and is given by:

$$V_{OUT} = -V_{REF} \times D/4096$$

where D is the digital input code integer number that is between 0 and 4095.

The DAC's output capacitance (C_{OUT}) is code dependent and varies from 90pF (all digital inputs low) to 120pF (all digital inputs high).

To ensure accuracy over the full operating temperature range, a permanently turned "ON" MOS transistor switch was included in series with the feedback resistor (R_{FB}) and the R-2R ladder's terminating resistor (see Figure 1). The gates of these NMOS transistors are internally connected to V_{DD} and will be turned "OFF" (open) when V_{DD} is not applied. If an op amp uses the DAC's R_{FB} resistor to close its feedback loop, then V_{DD} must be applied before or at the same time as the op amp's supply; this will ensure that the op amp's feedback loop will not be "open-circuited" and swing to either rail. In addition, some applications require the DAC's ladder resistance to fall within a certain range and are measured at incoming inspection; V_{DD} must be applied before these measurements can be made.

DIGITAL SECTION

The DAC-8221's digital inputs are TTL compatible at V_{DD} = +5V and CMOS compatible at V_{DD} = +15V. They were designed to convert TTL and CMOS input logic levels into voltage levels that will drive the internal circuitry. The DAC-8221 can use +5V CMOS logic levels with V_{DD} = +12V; however, supply current will rise to approximately 5-6mA.

Figure 3 shows the digital input structure for one bit. This circuit drives the DAC register. Digital controls ϕ and $\overline{\phi}$ shown are generated from the DAC's input control logic circuitry.

The digital inputs are electrostatic-discharge (ESD) protected with two internal distributed diodes as shown in Figure 3; they are connected between V_{DD} and DGND. Each input has a typical input current of less than 1nA.

The digital inputs are CMOS inverters and draw supply current when operating in their linear region. Using a +5V supply, the linear region is between +1.2V to +2.8V with current peaking at +1.8V. Using a +15V supply, the linear region is between +1.8V to +12V (current peaking at +3.9V). It is recommended that the digital inputs be operated as close to the power supply voltage and DGND as is practically possible; this will keep supply currents to a minimum. The DAC-8221 may be operated with any supply voltage between the range of +5V to +15V and still perform to data sheet limits.

FIGURE 3: Digital Input Structure For One Bit

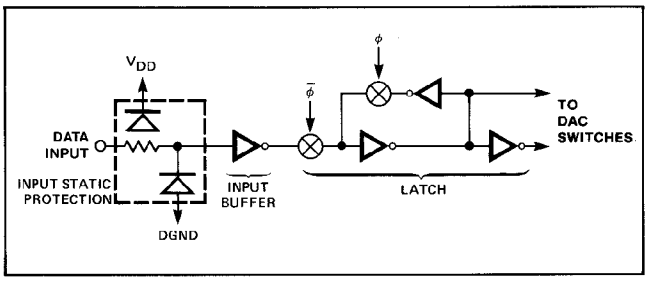

INTERFACE CONTROL LOGIC INFORMATION

DAC SELECTION

Both DAC registers share a common 12-bit input port. The control input ($\overline{\text{DAC A}}$/DAC B) selects which DAC can accept data from the input port.

MODE SELECTION

Inputs $\overline{\text{CS}}$ and $\overline{\text{WR}}$ control the operating mode of the selected DAC. See Mode Selection Table below.

WRITE MODE

When $\overline{\text{CS}}$ and $\overline{\text{WR}}$ are both low, the selected DAC is in the write mode. The input buffer and DAC register of the selected DAC are transparent and its analog output responds to activity on DB0—DB11 pins.

HOLD MODE

The selected DAC register retains the data which was present on DB0—DB11 pins just prior to $\overline{\text{CS}}$ or $\overline{\text{WR}}$ assuming a high state. Both analog outputs remain at the values corresponding to the data in their respective registers.

MODE SELECTION TABLE

$\overline{\text{DAC A}}$/ DAC B	$\overline{\text{CS}}$	$\overline{\text{WR}}$	DAC A	DAC B
L	L	L	WRITE	HOLD
H	L	L	HOLD	WRITE
X	H	X	HOLD	HOLD
X	X	H	HOLD	HOLD

L = Low State H = High State X = Don't Care

APPLICATIONS INFORMATION

UNIPOLAR OPERATION

Figure 4 shows a simple unipolar (2-quadrant multiplication) circuit using the DAC-8221 and OP-270 dual op amp (use two OP-42s for applications requiring higher speeds). Table 1 shows the corresponding code table. Table 3 shows the recommended values for R1, R2, R3, and R4. Low temperature-coefficient (approximately 50ppm/°C) resistors or trimmers should be used. Resistors R1, R2, and R3, R4 are used only if full-scale gain adjustments are required. Maximum full-scale error without these resistors for the top grade device where $V_{REF} = \pm 10V$ is 0.048%, and 0.097% for the low grade. Capacitors C1 and C2 provide phase compensation to reduce overshoot and ringing when high-speed op amps are used.

TABLE 1: Unipolar Binary Code Table (Refer to Figure 4)

BINARY NUMBER IN DAC REGISTER MSB LSB	ANALOG OUTPUT, V_{OUT} (DAC A or DAC B)
1111 1111 1111	$-V_{REF}\left(\frac{4095}{4096}\right)$
1000 0000 0000	$-V_{REF}\left(\frac{2048}{4096}\right) = -\frac{1}{2}V_{REF}$
0000 0000 0001	$-V_{REF}\left(\frac{1}{4096}\right)$
0000 0000 0000	0V

NOTE:
$1\ LSB = (2^{-12})(V_{REF}) = \frac{1}{4096}(V_{REF})$

FIGURE 4: Dual DAC Unipolar Operation (2-Quadrant Multiplication)

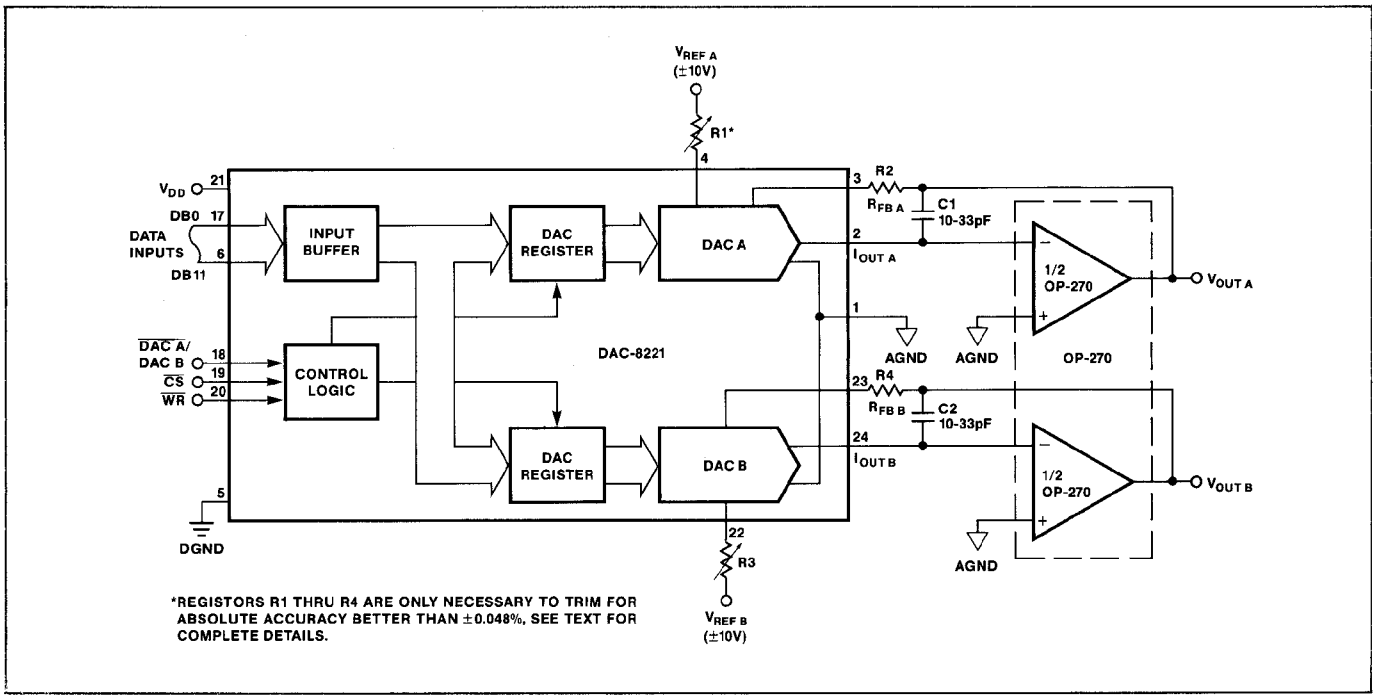

FIGURE 5: Dual DAC Bipolar Operation (4-Quadrant Operation)

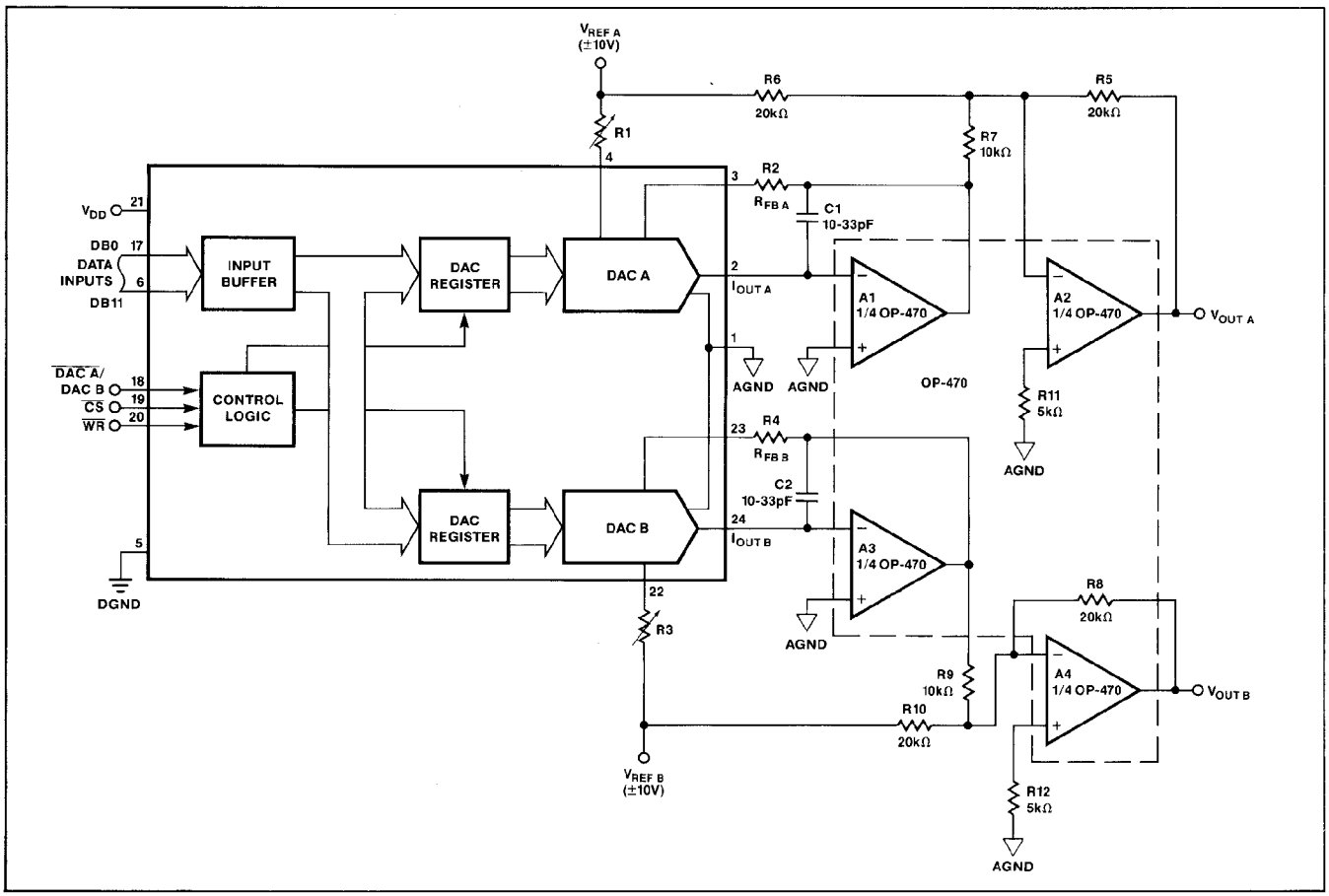

TABLE 2: Bipolar (Offset Binary) Code Table (Refer to Figure 5)

BINARY NUMBER IN DAC REGISTER MSB LSB	ANALOG OUTPUT, V_{OUT} (DAC A or DAC B)
1111 1111 1111	$+V_{REF}\left(\frac{2047}{2048}\right)$
1000 0000 0001	$+V_{REF}\left(\frac{1}{2048}\right)$
1000 0000 0000	0V
0111 1111 1111	$-V_{REF}\left(\frac{1}{2048}\right)$
0000 0000 0000	$-V_{REF}\left(\frac{2048}{2048}\right)$

NOTE:
1 LSB = $(2^{-11})(V_{REF}) = \frac{1}{2048}(V_{REF})$

TABLE 3: Recommended Trim Resistor Values vs Grade for Figures 4 and 5

TRIM RESISTOR	FW/HP	AW/EW/GP
R1, R3	500Ω	200Ω
R2, R4	150Ω	82Ω

Full-scale adjustment is achieved by loading the appropriate DAC's digital input with 1111 1111 1111 code and adjusting R1 (or R3 for DAC B) so that:

$$V_{OUT} = V_{REF} \times (4095/4096)$$

If R1, R2, R3, and R4 are not used, then full-scale is adjusted by varying V_{REF} voltage. Zero adjustment is performed by loading the DAC's digital input with 0000 0000 0000 code and adjusting the op amp's offset voltage to 0V. It is recommended that the op amp offset voltage be less than 10% of 1 LSB (244μV), over the operating temperature range of interest. This will ensure the DAC's monotonicity and minimize gain and linearity errors.

BIPOLAR OPERATION

The bipolar (offset binary) 4-quadrant configuration using the DAC-8221 is shown in Figure 5, and the corresponding code is shown in Table 2. The circuit makes use of the OP-470, a quad op amp (use four OP-42s for applications requiring higher speeds).

Again, resistors R1, R2, and R3, R4 are used only if full-scale gain adjustments are required. Maximum full-scale error without these resistors for the top grade device and $V_{REF} = \pm 10V$ is 0.048%, and 0.097% for the low grade. See Table 3 for the recommended values. If they are used, then low temperature-coefficient (approximately 50ppm/°C) resistors or trimmers should be used.

If resistors R1 thru R4 are omitted, then R5, R6, R7 (R8, R9, and R10 for DAC B) should be ratio-matched to 0.01% to keep gain error within data sheet limits. They should also have matching temperature-coefficient characteristics if operating over the full temperature range.

Zero-output is adjusted by loading the appropriate DAC's digital input with 1000 0000 0000 code and varying R1 (R3 for DAC B) so that $V_{OUT\,A}$ (or $V_{OUT\,B}$) equals 0V. If R1, R2 (R3, R4 for DAC B) are omitted, then zero output is adjusted by varying R6, R7 ratios (R9, R10 for DAC B). Full-scale is set by loading the appropriate DAC's digital inputs with 1111 1111 1111 code and varying R5 (R8 for DAC B) or V_{REF}.

SINGLE SUPPLY OPERATION

CURRENT SWITCHING MODE

Because the DAC-8221's R-2R resistor-ladder terminating resistor is internally connected to AGND, it lends itself well for single supply operation in the current steering mode configuration. This means that AGND can be raised above system ground as shown in Figure 6. The output voltage will swing between +5V and +10V depending on the digital input code.

The output expression is given by:

$$V_{OUT} = V_{OS} + (D/4096)\,(V_{OS})$$

where V_{OS} = Offset Reference Voltage (+5V in Figure 6)
D = Decimal Equivalent of the Digital Input Word

FIGURE 6: Single Supply Operation (Current Switching Mode)

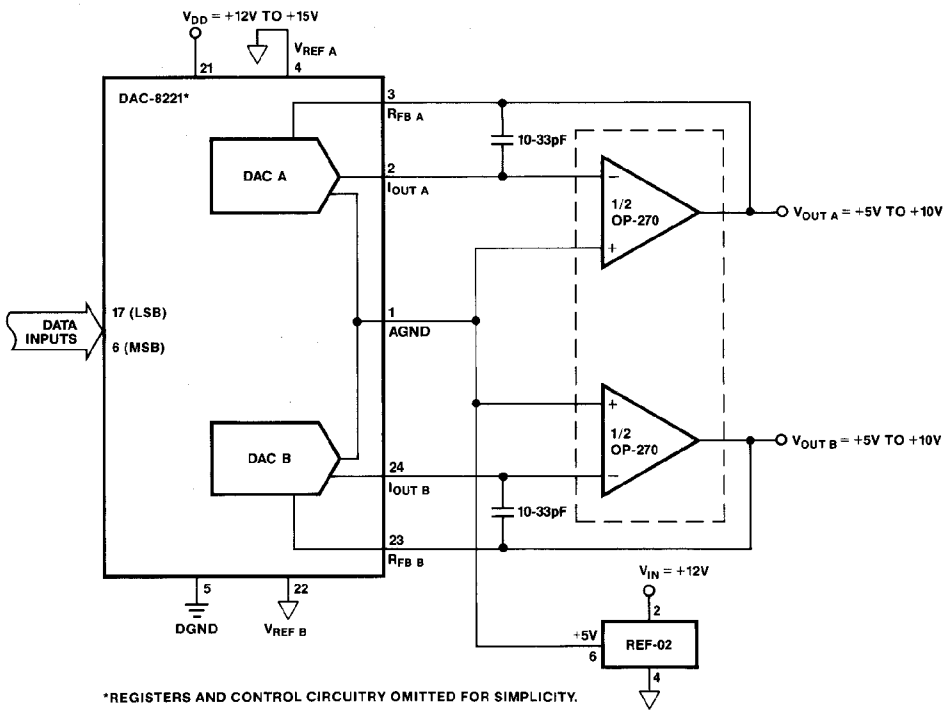

FIGURE 7: Single Supply Operation (Voltage Switching Mode)

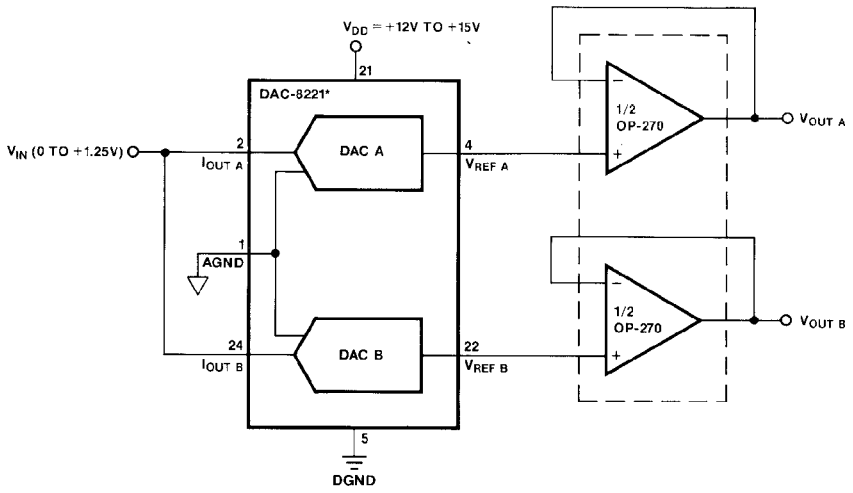

*REGISTERS AND DIGITAL CIRCUITRY OMITTED FOR SIMPLICITY.

VOLTAGE SWITCHING MODE

Figure 7 shows the DAC-8221 in another single supply configuration. The R-2R ladder is used in the voltage switching mode and functions as a voltage divider. The output voltage (at the V_{REF} pin) exhibits a constant impedance R (typically 11kΩ) and must be buffered by an op amp. The R_{FB} pins are not used and are left open. The reference input voltage must be maintained within +1.25V of AGND, and V_{DD} between +12V and +15V; this ensures that device accuracy is preserved.

The output voltage expression is given by:

$$V_{OUT} = V_{REF}\,(D/4096)$$

where D = Decimal Equivalent of the Digital Input Word

APPLICATIONS TIPS

GENERAL GROUND MANAGEMENT

Grounding techniques should be tailored to each individual system. Ground loops should be avoided, and ground current paths should be as short as possible and have low impedance.

To reduce digital transients from appearing at the analog output, the DAC-8221's AGND and DGND pins should be tied together at the device socket. This common point then becomes the single ground point connection. AGND and DGND is then brought out separately and tied to their respective power supply grounds. Ground loops can be created if both grounds are tied together at more than one location, i.e., tied together at the device and at the digital and analog power supplies.

The PC board ground plane can be used for the single point ground if the device socket connection is not practical. If neither of these connections are practical or allowed, then the DAC-8221 should be placed as close as possible to the system's single point ground connection. Back-to-back Schottky diodes should then be connected between AGND and DGND.

POWER SUPPLY DECOUPLING

Power supplies used with the DAC-8221 should be well filtered and regulated. Local supply decoupling consisting of a 1 to 10μF tantalum capacitor in parallel with a 0.1μF ceramic is highly recommended. The capacitors should be connected between V_{DD} and DGND and at the device socket.

FIGURE 8: Digitally-Programmable Window Detector (Upper/Lower Limit Detector)

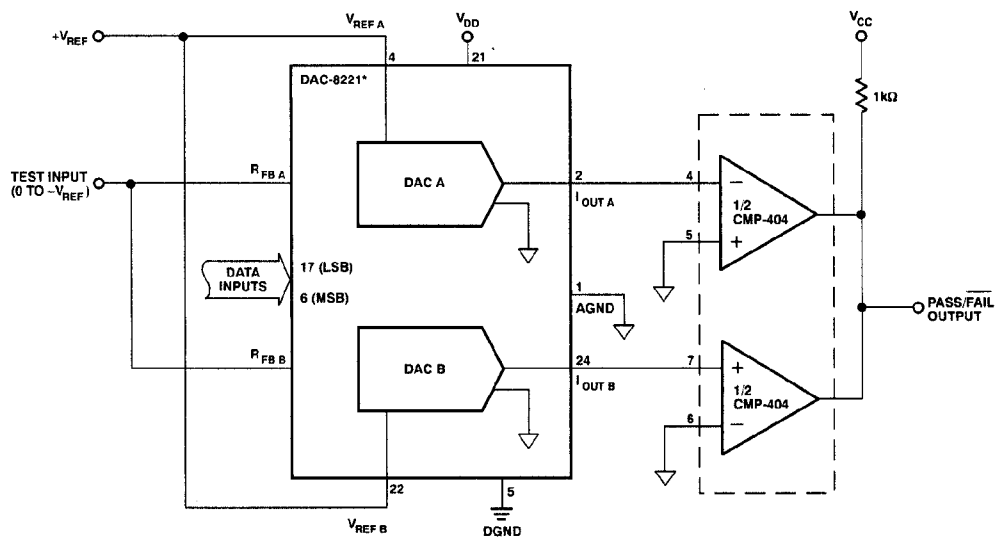

*REGISTERS AND CONTROL CIRCUITRY OMITTED FOR SIMPLICITY.

FIGURE 9: DAC-8221 To 8086 Interface

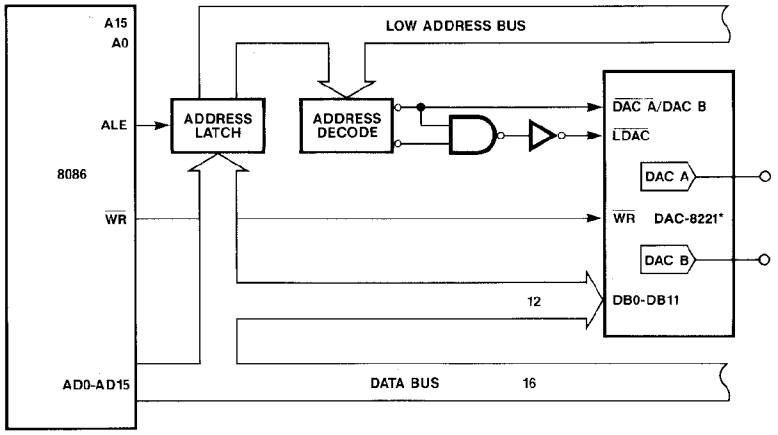

*REGISTERS AND CONTROL CIRCUITRY OMITTED FOR SIMPLICITY.

FIGURE 10: DAC-8221 To 68000 Interface

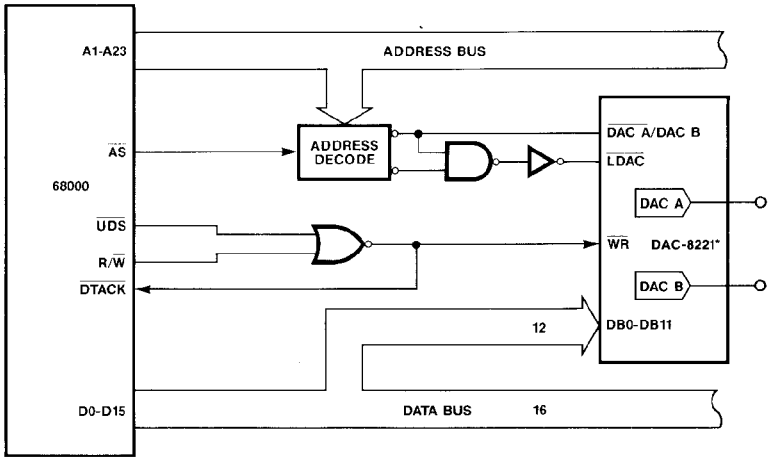

*REGISTERS AND CONTROL CIRCUITRY OMITTED FOR SIMPLICITY.