ITEM NO.	NAME	MATERIAL	NOTES
1	HOUSING	PA66	UL94-V0
2	SCREW	STEEL	M2.5/ZN PLATED
3	WIRE CONNECTOR	STEEL	M2.5/ZN PLATED
4	CONDUCTOR	COPPER ALLOY	TIN PLATED

PART NO.	COLOR	PANTONE #
DM20-GY	GREY	COOL GRAY2U
DM20-BU	BLUE	300U
DM20-LK	BLACK	BLACK

REVISIONS

REV	ZONE	DESCRIPTION	DATE	ECN	BY
A	-	INITIAL RELEASE	09/24/2012	BU-J12374	TJN

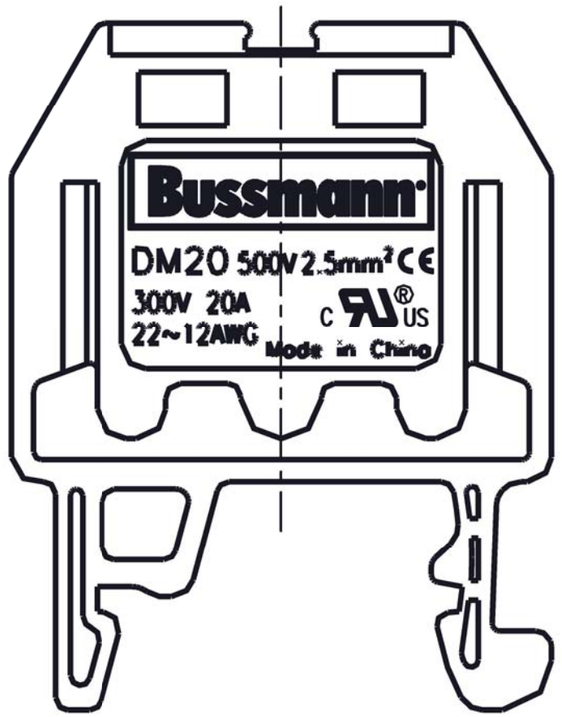

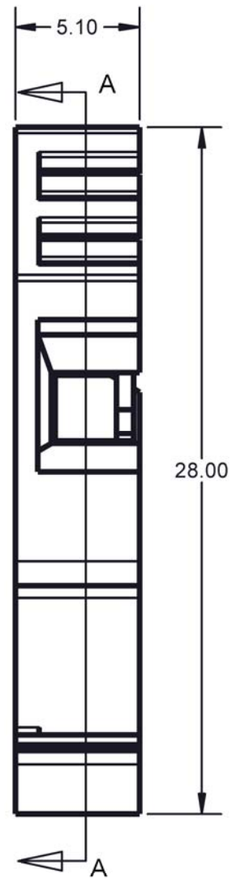

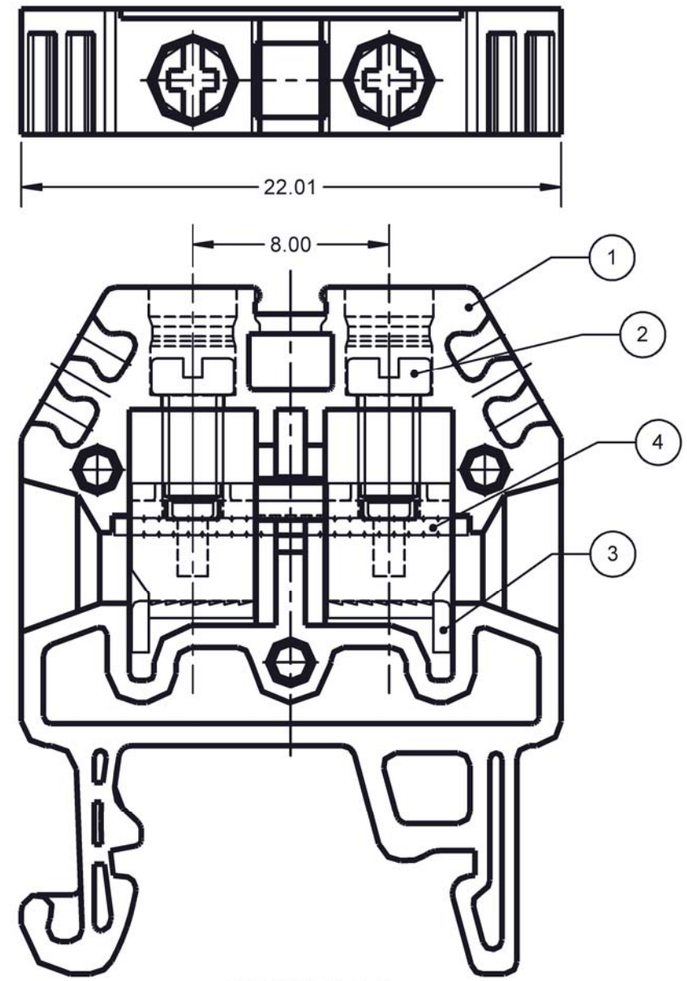

SECTION A-A

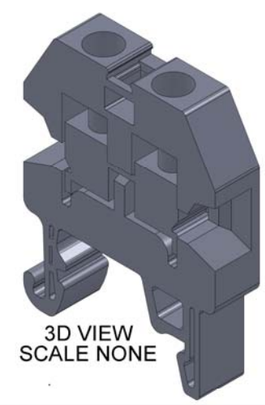

3D VIEW
SCALE NONE

NOTES:

1. RATINGS: UL 300V/20A, IEC 500V/24A
   INSULATION WITHSTAND VOLTAGE 2000VAC/1MINUTE
   TEMPERATURE RANGE -40°C~105°C
2. SEE 2A2943 FOR DIN DIMENSION DETAILS
3. SCREW TORQUE 0.4N-M (3.5IN-LB)
4. WIRE RANGE UL 22~12AWG, IEC 0.5~2.5 mm²
5. ASSEMBLY MUST BE FREE OF OIL, GREASE AND OTHER FOREIGN MATERIALS.
6. ASSEMBLY MUST COMPLY WITH RoHS SPECIFICATION #1P2163.

MODEL SOURCE DATA: --
MODEL VERSION:

THIS DRAWING IS AN UNCONTROLLED COPY IF PRINTED OR SENT ELECTRONICALLY, DO NOT SCALE DRAWING

CONFIDENTIAL. THE INFORMATION CONTAINED IN THIS DOCUMENT IS THE PROPERTY OF COOPER INDUSTRIES, INC. IT IS NOT FOR PUBLIC DISCLOSURE. POSSESSION OF THE INFORMATION DOES NOT CONVEY ANY RIGHT TO LOAN, SELL, OR DISCLOSE THE INFORMATION. UNAUTHORIZED REPRODUCTION OR USE OF THE INFORMATION IS PROHIBITED. THIS DOCUMENT IS TO BE RETURNED TO COOPER INDUSTRIES, INC. UPON COMPLETION OF THE PURPOSE FOR WHICH IT WAS LOANED OR UPON REQUEST.

COPYRIGHT. COOPER INDUSTRIES, INC.
THIS IS AN UNPUBLISHED WORK. THE DISCLOSURE OF THIS WORK IS LIMITED TO SELECT PERSONNEL. FURTHER DISSEMINATION OR DISCLOSURE TO THE PUBLIC IS PROHIBITED. THIS UNPUBLISHED WORK IS PROTECTED BY FEDERAL COPYRIGHT LAW AND ALL RIGHTS THEREUNDER ARE RESERVED BY COOPER INDUSTRIES, INC.

GENERAL DRAWING PRACTICES IN ACCORDANCE WITH **ASME - Y14.100-2004**
DIMENSIONS AND TOLERANCES IN ACCORDANCE WITH **ASME - Y14.5M-1994**

UNLESS OTHERWISE SPECIFIED DIMENSIONS ARE IN MILLIMETERS TOLERANCES TO BE
ONE PLACE X.X = ±0.3 mm
TWO PLACE X.X X = ±0.13 mm
ALL ANGLES X.X = ± 1°

SPECIAL CHARACTERISTIC ◇ (0)
SIGNIFICANT CHARACTERISTIC △ (0)

THIRD ANGLE PROJECTION

APPROVALS	DATE
ENGINEER TJN	09/26/2012
DRAWN TJN	09/26/2012
MANUFACTURING ENGINEER --	--/--/----

MATERIAL: SEE TABLE
FINISH: SEE TABLE

COOPER Bussmann
St. Louis, MO 63178 (USA)

TITLE: FEED THROUGH TERMINAL BLOCK

SIZE: A3 | DWG NO.: DM20-XX | REV: A
SCALE: 4:1 | SHEET 1 OF 1

SLA_BUSS_NAE_GENRL_REV_A