CASE FINISH	CURRENT (AMPS)	WORKING VOLTAGE				MAXIMUM DC RESISTANCE (OHMS)	MAXIMUM VOLTAGE DROP		MINIMUM CAPACITANCE (uF)	MIN. INSERTION LOSS PER MIL-STD-220, FULL LOAD, +25°C												
		-55°C TO +85°C		-55°C TO +125°C																		
		AC	DC	AC	DC		DC	AC		14 KHz	30 KHz	50 KHz	75 KHz	100 KHz	150 KHz	300 KHz	500 KHz	1 MHz	10 MHz	100 MHz	1 GHz	2.75 GHz
SOLDER	3.0	---	--	125	150	--	0.09	0.15	--	--	--	--	--	--	5	6	--	47	80	--	70	70

45

PART MARKING:
M15733/26-0005
OLSP2 125°C
125 VACW 3A
400Hz 150VDC
51-311-312

PACKAGE MARKING:

STANDARD

MARKING NOTES:

N/A

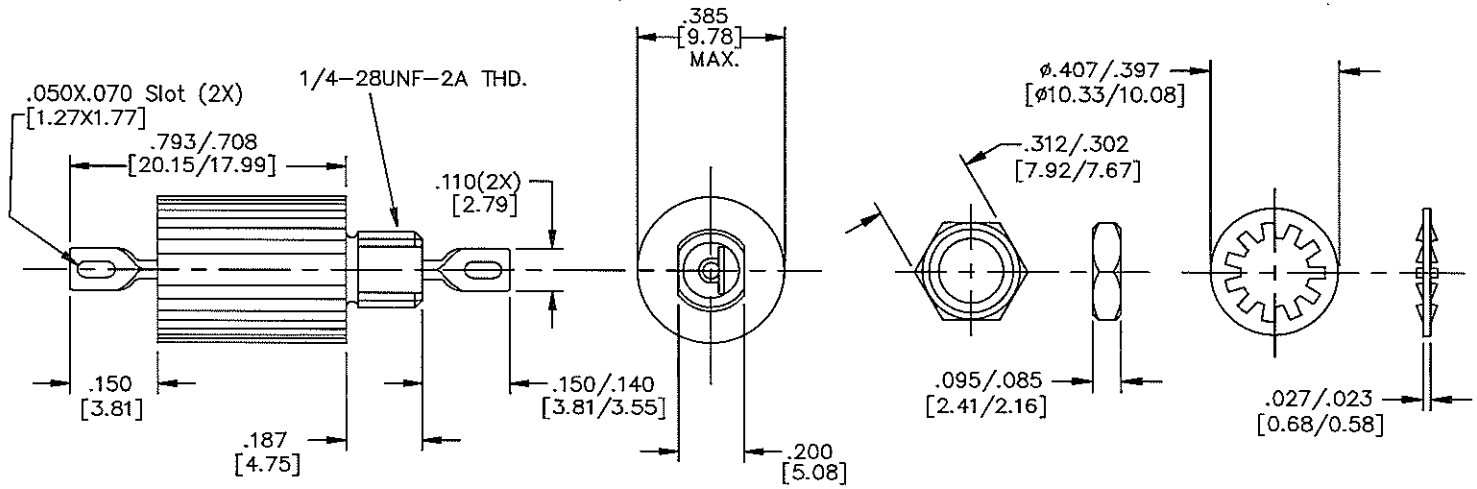

NOTES:
1) MOUNTING TORQUE NOT TO EXCEED 7in-lbs.

REV. NO.	CHANGE NOTICE
44	CN 183751
45	CN 38679-ENG

UNLESS OTHERWISE SPECIFIED DIMENSIONS ARE IN INCHES. [MILLIMETERS] DO NOT SCALE.

TOLERANCES UNLESS OTHERWISE SPECIFIED
Fractions ±
Dec. .xx±
Dec. .xxx± .010
Angles ±0° 30'

CODE IDENT. NO. OLSP2

SPECTRUM CONTROL INC.
FAIRVIEW PENNSYLVANIA

Dwn. MAYNARD
Date 12-11-07
Engr. J.Kraus
Sheet 1 of 1

Description Low Pass EMI Filter

51-311-312

Quality Products From The Specialists In Electro-Magnetic Compatibility