# AS85049/126
## 90° Strain Relief
### Self-Locking or Non-Self-Locking

| CONNECTOR DESIGNATOR: | |
|---|---|
| H | MIL-DTL-38999 Series III & IV<br>EN3645 |

| Product Series and Basic Part Number | Dash No. *Table I Page 62-34* | | Finish *Table II Page 62-34* |
|---|---|---|---|
| M85049/126 | S | 09 | W |

*S = Detented Self-Locking*
*N = Non-Detented Self-Locking*
*Use Dash (–) for Non-Self-Locking*
*(See Note 5)*



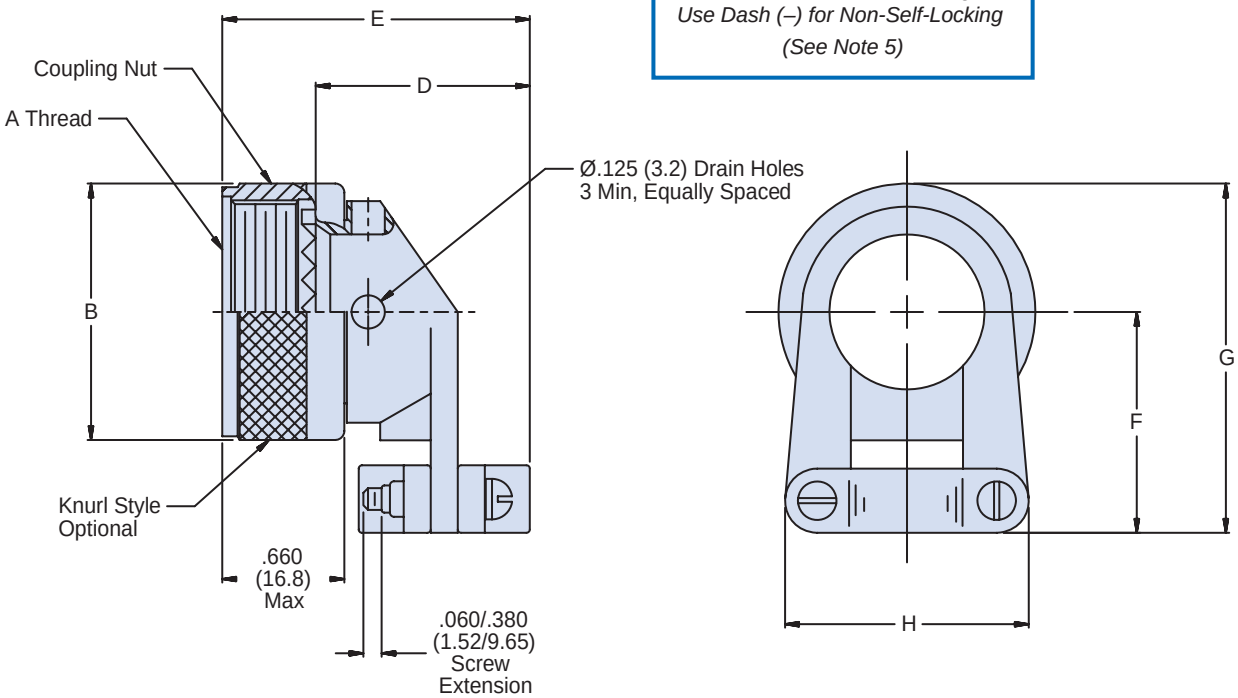


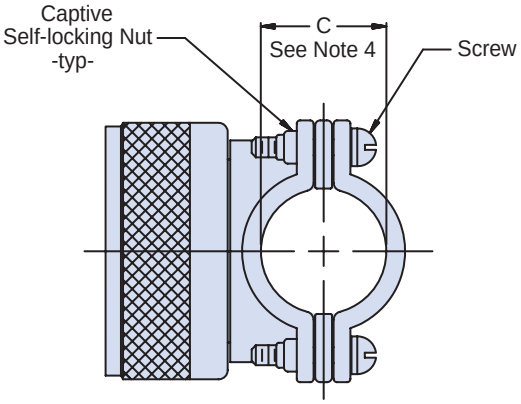


Dimensions in inches (millimeters) and are subject to change without notice.

© 2013 Glenair, Inc. U.S. CAGE Code 06324 Printed in U.S.A.

# AS85049/126
## 90° Strain Relief
### Self-Locking or Non-Self-Locking



**TABLE I: Dash Number, Shell Size, Thread and Dimensions**

| Dash No. | Screw Size | Shell Size Code (Ref) | A Thread ISO Metric | B Dia Max | C Dim ± .031 (0.79) See Note 4 | D Max | E Max Length | F Max | G Max | H Max |
|---|---|---|---|---|---|---|---|---|---|---|
| 09 | 4-40 | A | M12 x 1 - 6H | .858 (21.8) | .219 (5.6) | .86 (21.8) | 1.14 (29.0) | .81 (20.6) | 1.24 (31.5) | .88 (22.4) |
| 11 | 4-40 | B | M15 x 1 - 6H | .984 (25.0) | .264 (6.7) | .94 (23.9) | 1.22 (31.0) | .87 (22.1) | 1.36 (34.5) | .94 (23.9) |
| 13 | 4-40 | C | M18 x 1 - 6H | 1.157 (29.4) | .344 (8.7) | 1.14 (29.0) | 1.42 (36.1) | .93 (23.6) | 1.51 (38.4) | 1.12 (28.4) |
| 15 | 4-40 | D | M22 x 1 - 6H | 1.297 (32.5) | .460 (11.7) | 1.20 (30.5) | 1.48 (37.6) | .99 (25.1) | 1.63 (41.4) | 1.19 (30.2) |
| 17 | 4-40 | E | M25 x 1 - 6H | 1.406 (35.7) | .545 (13.8) | 1.34 (34.0) | 1.62 (41.1) | 1.09 (27.7) | 1.76 (44.7) | 1.44 (36.6) |
| 19 | 6-32 | F | M28 x 1 - 6H | 1.516 (38.5) | .615 (15.6) | 1.46 (37.1) | 1.74 (44.2) | 1.23 (31.2) | 1.99 (50.5) | 1.56 (39.6) |
| 21 | 6-32 | G | M31 x 1 - 6H | 1.642 (41.7) | .698 (17.7) | 1.58 (40.1) | 1.86 (47.2) | 1.30 (33.0) | 2.12 (53.8) | 1.69 (42.9) |
| 23 | 6-32 | H | M34 x 1 - 6H | 1.768 (44.9) | .780 (19.8) | 1.71 (43.4) | 1.99 (50.5) | 1.36 (34.5) | 2.24 (56.9) | 1.75 (44.5) |
| 25 | 8-32 | J | M37 x 1 - 6H | 1.869 (47.5) | .850 (21.6) | 1.83 (46.5) | 2.11 (53.6) | 1.42 (36.1) | 2.35 (59.7) | 1.88 (47.8) |

**TABLE II: Material and Finish**

| Symbol | Material | Finish |
|---|---|---|
| A | Aluminum Alloy | Black Anodize |
| N | | Electroless Nickel |
| W | | Cadmium, Olive Drab |
| X | | Nickel Fluorocarbon Polymer |
| Y | | Pure Dense Electrodeposited Aluminum |
| Z | | Zinc Nickel |
| S | 300 Series SST | Passivated |

**APPLICATION NOTES**

1. Assembly to be identified with manufacturer's name and part number, space permitting.
2. Glenair Series 600 Backshell Assembly Tools are recommended for assembly and installation.
3. Metric equivalents in parentheses (mm) are given for general information only and are based on 1.000 inch = 25.4 mm.
4. Cable entry is measured with saddle bars closed and bottomed on clamp ears.
5. Detented self-locking has a positive audible detented coupling.
6. Material/Finish:
   Clamp body, coupling nut, saddles - Al alloy or 300 Series SST/See Table II.
   Clamp screws and lock nuts - CRES/Passivated, Silver plate optional.
   Anti-rotation device - Corrosion resistant material

Dimensions in inches (millimeters) and are subject to change without notice.

© 2013 Glenair, Inc.
U.S. CAGE Code 06324
Printed in U.S.A.